Vanu Software Radio GSM Base Station

September 22, 2005

PORTER SQUARE GALLERIA • ONE PORTER SQUARE, SUITE 18 • CAMBRIDGE, MA 02140 • 617 864 1711 • WWW.VANU.COM
Copyright © 2004, Vanu, Inc.

Contents

Vanu Software Radio GSM Base Station 1

1. System Overview 4

2. BTS Sites 5

Routers 6

Connections 6

Troubleshooting 7

BTS Servers 7

Connections 7

Troubleshooting 8

Protium RF Front End 8

Protium Front-End Indicators 9

Protium Rear View Connections - Duplexer 10

Protium Rear View Connections – RF 11

Troubleshooting 12

Powerwave Amplifier 13

GPS Timing Source 16

Connections 16

Troubleshooting 16

3. BSC Site 16

Routers 17

Connections 18

Troubleshooting 18

BSC Servers 19

Troubleshooting 20

TRAU Server 20

Connections 20

Troubleshooting 21

Gigabit Ethernet Switch 21

Connections 21

Troubleshooting 21
VPN Key Server 21
Description 21
Connections 22
Troubleshooting 22
VPN Router 22
Connections 22
Troubleshooting 23

4. Acronym Glossary 24

5. Index 25

Figures

Figure 1: System Diagram 4
Figure 2: BTS with Protium Site 5
Figure 3: BTS Router and Connections 6
Figure 4: BTS Server Connections 7
Figure 5: Powerwave Amplifier Front View 13
Figure 6: Powerwave Rear View 15
Figure 7: GPS Timing Source Connections 16
Figure 8: BSC Site 17
Figure 9: Router Connections 18
Figure 10: Key Server, BSC and TRAU Servers (top to bottom) 19
Figure 11: BSC and TRAU Server Connections 20
Figure 12: Switch Connections – Front 21
Figure 13: Switch Connections – Back 21
Figure 14: VPN Key Server Connections 22
Figure 15: VPN Router Connections 22

1. System Overview

The Vanu Software Radio™ GSM/GPRS base station sub-system provides radio access network functionality by implementing the BTS and BSC in software running on a general-purpose server.

For a standard network configuration, Vanu, Inc. deploys Vanu Software Radio Base Transceiver Stations (BTS) at each tower site, and a centrally located Vanu Software Radio Base Station Controller (BSC). The Vanu BTSs and BSC run on industry-standard HP ProLiant Servers. Signal processing, protocol processing, and all other radio access network functionality is implemented as application level software running on top of the Linux operating system.

The Vanu BTS system uses a wideband RF front end from Protium Technologies and a multicarrier power amplifier from Powerwave Technologies. The Vanu BSC seamlessly connects to the GSM core network circuit switch domain via the A interface and to the packet switch domain by means of the Gb interface.

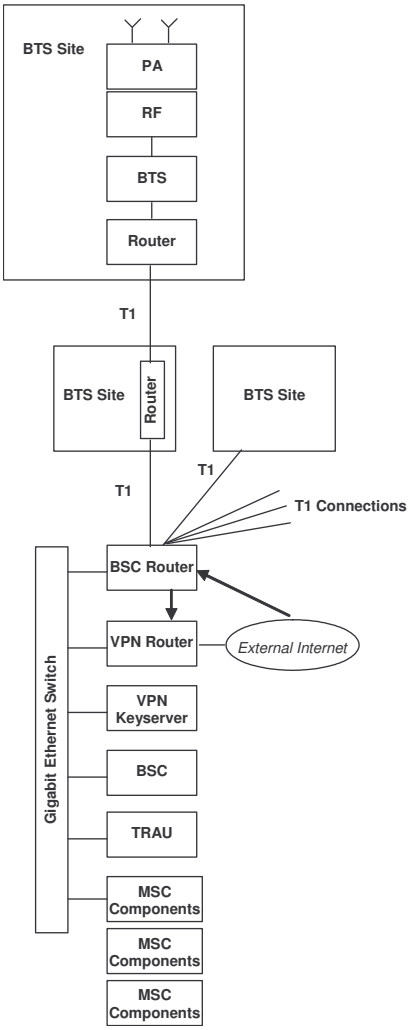

Figure 1: System Diagram

The Vanu Software Radio base station is composed of four major subsystems:

- RF front end, supporting either the 800MHZ cellular band or the 1900 MHz PCS band
- Analog-to-Digital and Digital-to-Analog conversion
- Signal Processing
- Back end network connectivity

Vanu, Inc. integrates these subsystems, running its software on top of the COTS hardware that comprises a complete radio access network, including the traditional functionality of the BTS, TRAU and BSC.

2. BTS Sites

The Vanu Software Radio BTS implements all of the signal processing required to implement full GSM basestation functionality in software running on a server. A standard system implements the components of GSM Phase II for voice communications. It supports mobile phones operating in enciphered mode using the full-rate (GSM 6.10) vocoders.

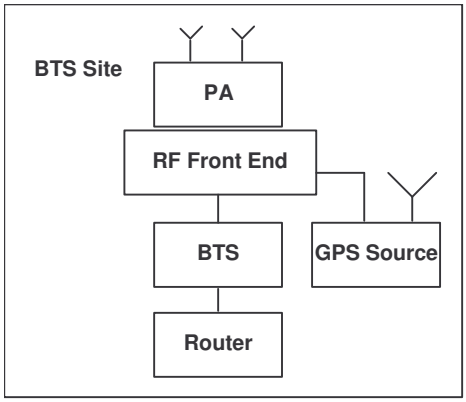

Figure 2: BTS with Protium Site

The Vanu BTS is complemented by a Protium Technologies RF subsystem. A 25-MHz frequency band is digitized and transmitted between the two units.

Routers

The BTS router is a Cisco 1760 1U router. It has two WIC cards installed. One is a dual port T1 card, and the other is a four-port ethernet switch. The ethernet switch provides a local network for the server, its iLO, and any other diagnostic computers. The T1 card provides a connection to the BSC site. Some of the BTS sites are daisy chained together, and use both T1 ports, while some only use one. Ports are labeled:

(slot number of the card)/(port number on the card)

Connections

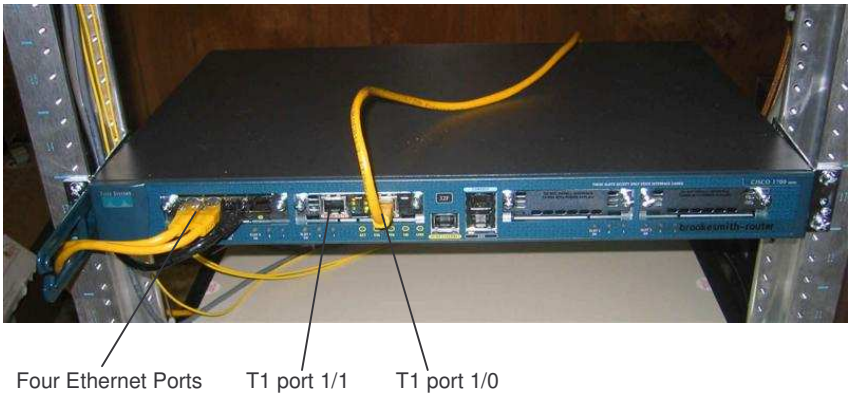

Figure 3: BTS Router and Connections

There are two different configurations of T1 connections, daisy-chain and endpoint.

In a daisy-chain configuration:

- T1 1/0 to BSC router
- T1 1/1 to daisy chained BTS router

On an endpoint router that is connected to only the BSC router or at the end of a daisy chained T1:

- T1 1/0 to downstream BTS router or BSC router

Common to both configurations:

Qty	Connection
1	Ethernet cable to server ethernet port 1
1	Ethernet cable to server iLO ethernet port
1	Power cable

Troubleshooting

The connected ethernet ports should have green LEDs.

The T1 port(s) in use should have only one green LED lit. If both an amber LED and a green LED are lit, the T1 connection is made, but there are alarms on it. An alarm indicates that there may be a problem with other equipment in the T1 link, or the line code or framing are not configured correctly. If only an amber LED is lit, the T1 connection has not been established at all.

BTS Servers

The HP Proliant server runs the BTS software on top of a Linux operating system. The RF data enters the computer via a gigabit Ethernet connection from the RF front end. Messages to the rest of the system are sent from the ethernet port to the router, where they travel over the T1 to the BSC. The iLO port is used to monitor and control the server remotely.

Connections

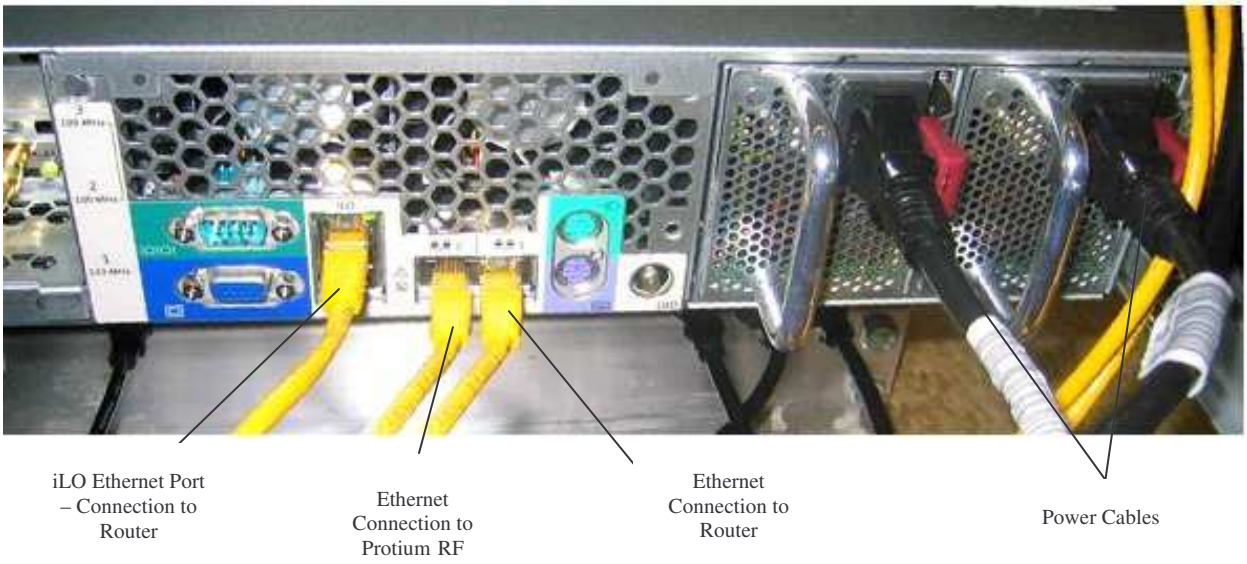

Figure 4: BTS Server Connections

Qty	Connection
2	Power cables
1	Ethernet cable from ethernet port 1 to the router
1	Ethernet cable from iLO ethernet port to the router
1	Ethernet cable from Ethernet port 2 to the Protium RF

Troubleshooting

The power supplies should each show a green LED when the server is turned on. There are four LEDs on the front of the server by the power button. If one of the power supplies is not working, the heartbeat LED (second from the top) will be amber instead of green. The hard drive LEDs (the bottom two) will blink on and off as they are used. The hard drive LEDs will show red if there is an error with the hard drive.

Protium RF Front End

The Protium Front End Unit is comprised of two boxes, one that houses a duplexer and filter and a second which contains the RF up/down conversion and digital hardware. The RF signal is received through both the Main Antenna port and the Diversity Antenna port. RF data that is received from the Main Antenna runs through the duplexer, out the Main RX SMA port, over a cable to the RX port on the RF front end. The signal is then converted to digitized data and sent out through an Ethernet port to the BTS.

An RF signal that is received by the Diversity port is run through a filter and transferred to the RF Front end via the Diversity RX ports on both devices. The RF front end then digitizes and sends the data to the BTS via an Ethernet port.

Digitized data is received from the BTS though the same Ethernet port as it was transmitted. The digitized data is then converted to an RF signal, and sent to the PA through a cable from the TX SMA port. The data runs through the PA and enters back into the Protium unit through a cable to the PA port, where it is then transmitted out the BTS antenna.

There are two LED lights on the front of the Protium unit. The first is a green light which indicates that power is active on the box. The second light is red, and when illuminated, indicates that there is an alarm in the system which has been triggered.

Protium Front-End Indicators

Figure 9: Protium Front End View

Qty	Connection
1	Alarm LED
1	Power LED

Protium Rear View Connections - Duplexer

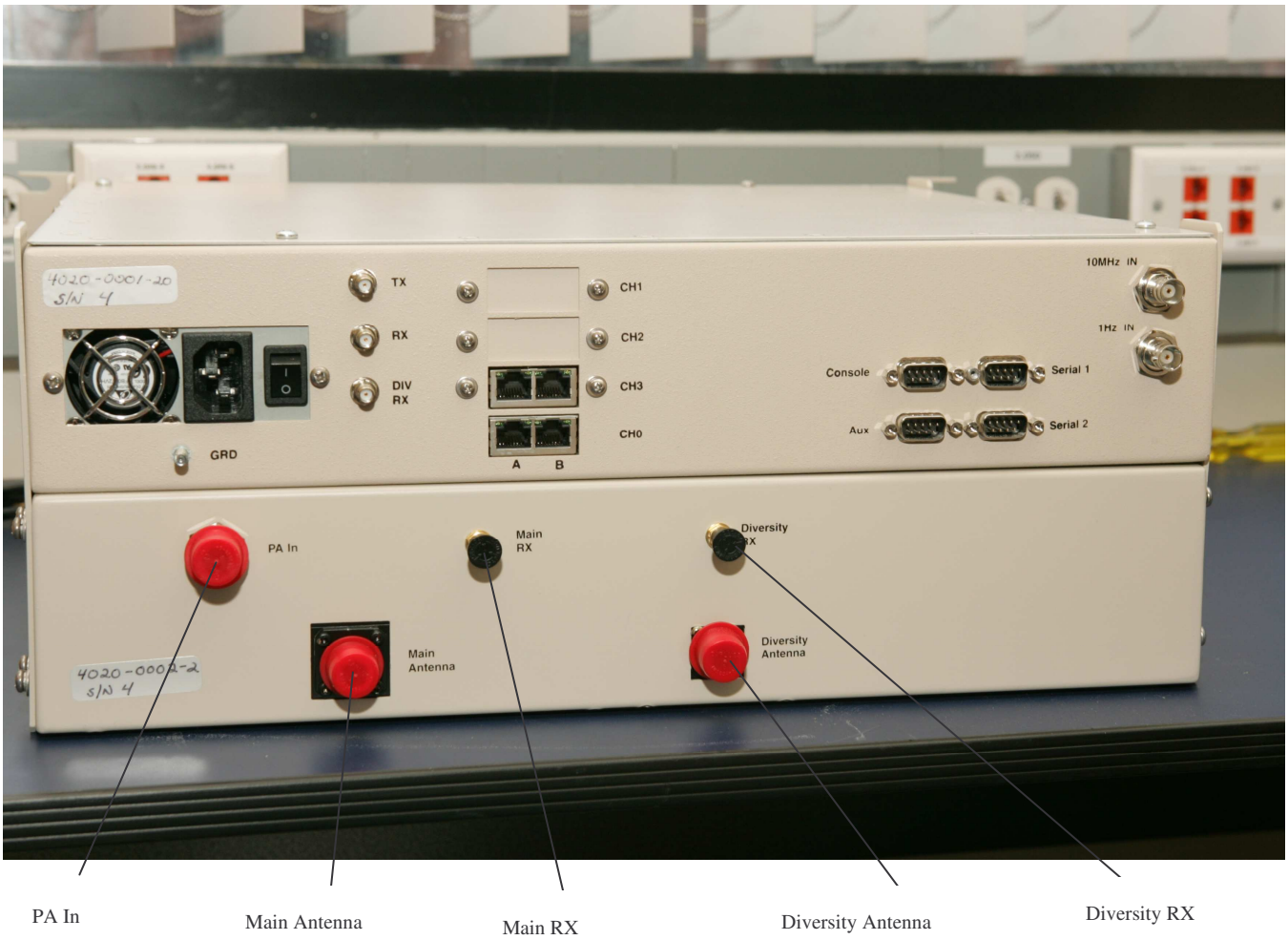

Figure 10: Protium Rear View Connections

Qty	Connection
1	PA In port is an N connector where the PA Cable connects to the duplexer to transmit data via an RF signal to the handsets
1	Main Antenna port is an N Connector where the Antenna Coax Cable connects to the duplexer.
1	Main RX port is an SMA connector that routes data from the duplexer to the Protium main unit RX port
1	Diversity Antenna port is an N connector where the Diversity Coax Cable connects to the filter
1	Diversity RX port is an SMA connector that routes data from the duplexer to the Protium main unit DIV RX port

Protium Rear View Connections – RF

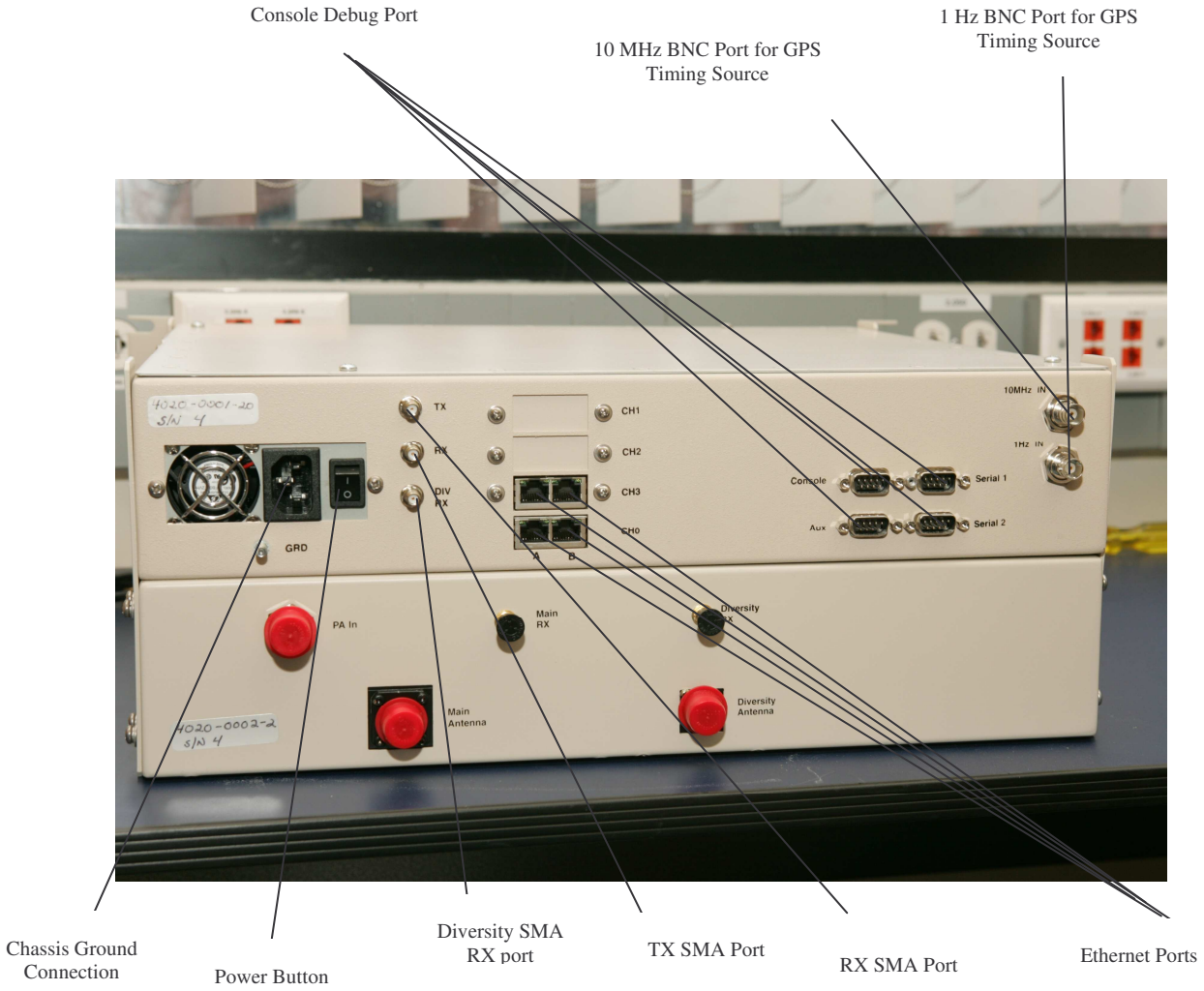

Figure 11: Protium Rear View Connections

Qty	Connection
1	Chassis Ground Connection – Power Source for RF Unit
1	Power Button on and off switch
4	Ethernet Ports; BTS Ethernet connection is established from one of these ports
1	Diversity RX SMA port receives a cable from the Diversity RX port on the duplexer
1	TX SMA Port connects to PA and sends RF signal data from Protium Unit
1	RX SMA Port receives a cable from the Main RX port on the duplexer

1	Console debug Port is where a connection would be established to debug system error messages
1	10 Hz BNC Port for GPS Timing Source
1	1 Hz BNC Port for GPS Timing Source

Troubleshooting

The LEDs on the front panel of the Protium RF are the best source for debugging problems with the remote. There is more information in the Protium manual.

Powerwave Amplifier

The Powerwave G3L-1929-120 is used as the PA at each BTS. The output from the Protium RF Front End is sent to the PA via a Coax Cable and is then amplified by 63 dB.

Figure 5: Powerwave Amplifier Front View

Qty	Connection
1	Status LED
1	Restart Switch
4	SMA Input Cables from the Protium Box for slots 0-3
4	N Connectors to Duplexer for slots 0-3
4	Front DC Power slots for PAs 0-3

Rear DC Power slots

Figure 6: Powerwave Rear View

Qty	Connection
4	Rear DC Power for slots 0-3

GPS Timing Source

The GPS Timing Source simply provides a 10 MHz clock signal and a 1 pulse per second signal to the Protium digital hardware for precision timing. It must be locked onto enough GPS satellites to operate properly, and it will indicate a lock with an illuminated LED on the front panel.

Connections

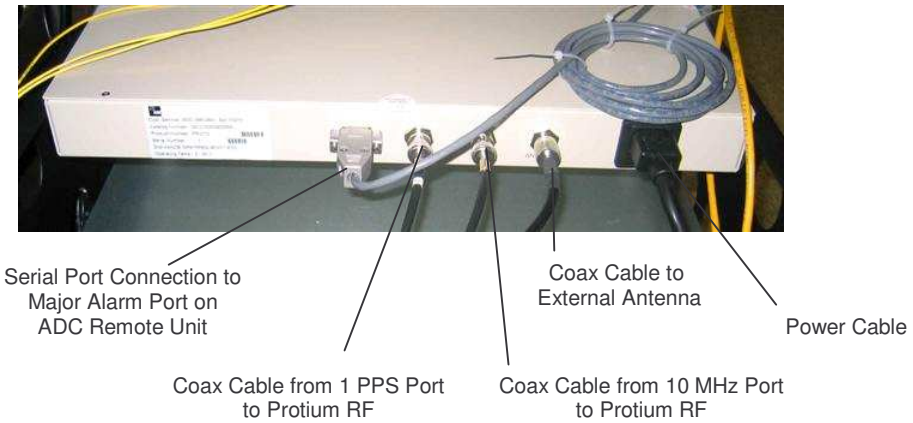

Figure 7: GPS Timing Source Connections

Qty	Connection
1	Power cable
1	Coax cable from the 1 PPS port to the Protium RF front-end
1	Coax cable from the 10 MHz port to the Protium RF front-end
1	Coax cable to the external antenna
1	Cable from serial port to major alarm port on ADC Remote Unit

Troubleshooting

The LEDs on the front panel indicate whether a lock has been achieved. After installation, the lock and fault LEDs will both be on for a short period of time on the order of 10-15 minutes until the GPS clears all of the errors out of its buffer.

3. BSC Site

The Vanu Software Radio base station controller (BSC) is the network node that runs radio resource management, and manages the connections to the GSM Core Network. The BSC and TRAU/RAU are built on an HP Server platform, using gigabit ethernet for interconnect.

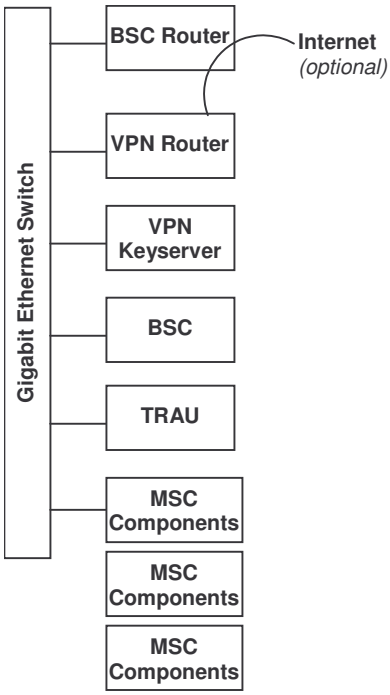

Figure 8: BSC Site

The BSC can handle up to 150 GSM carriers, which is equivalent to 1200 full rate voice calls. Each TRAU can support up to 150 voice calls, and larger call volumes can be supported by increasing the number of TRAU servers.

Routers

The BSC router has 16 T1 connections to connect to the cell sites. It has 1 T1 connection to the Internet. It has two ethernet ports, one of which is connected to the private LAN, and the other is directly connected to the T1 to the Internet. This public Internet ethernet port is connected directly to the VPN.

Connections

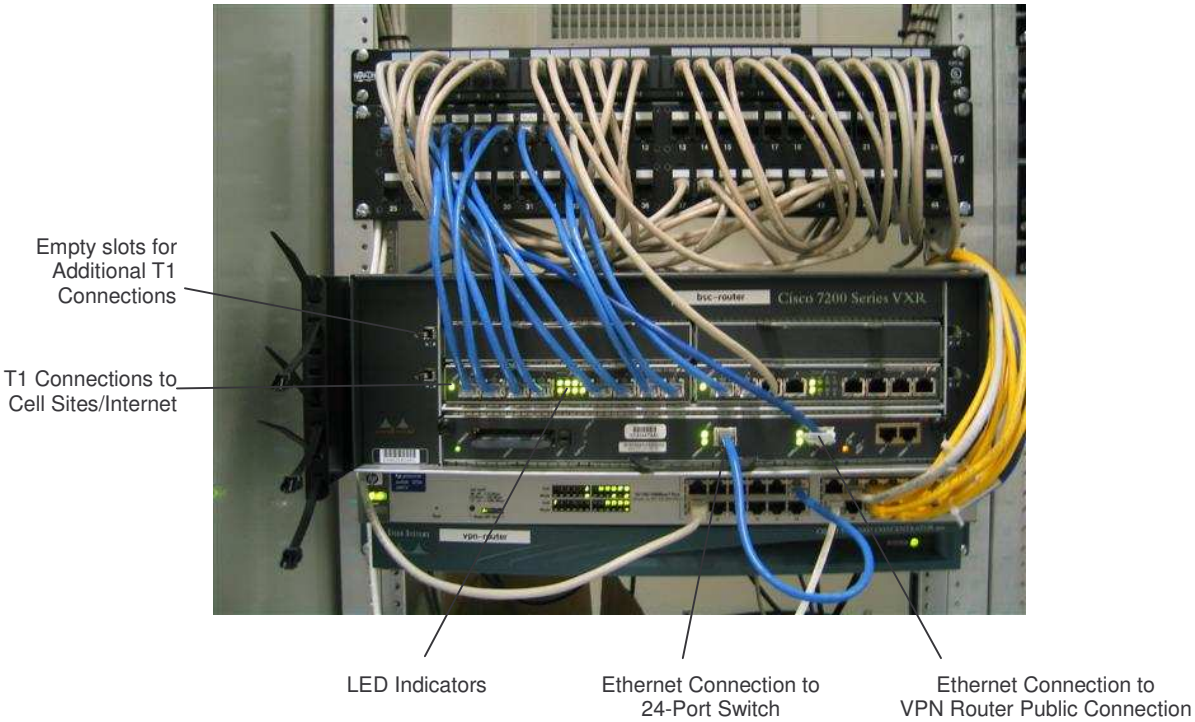

Figure 9: Router Connections

Qty	Connection
	Multiple T1 connections to cell sites
1	T1 connection to the Internet (optional)
1	Ethernet connection to the 24 port switch
1	Ethernet connection to the public connection on the VPN
1	Power connector

Troubleshooting

There are banks of LEDs, with each LED corresponding to one T1 connection. If the LED is lit, the T1 connection is made. If the LED is dark, the T1 connection may be showing alarms or it may have no signal.

BSC Servers

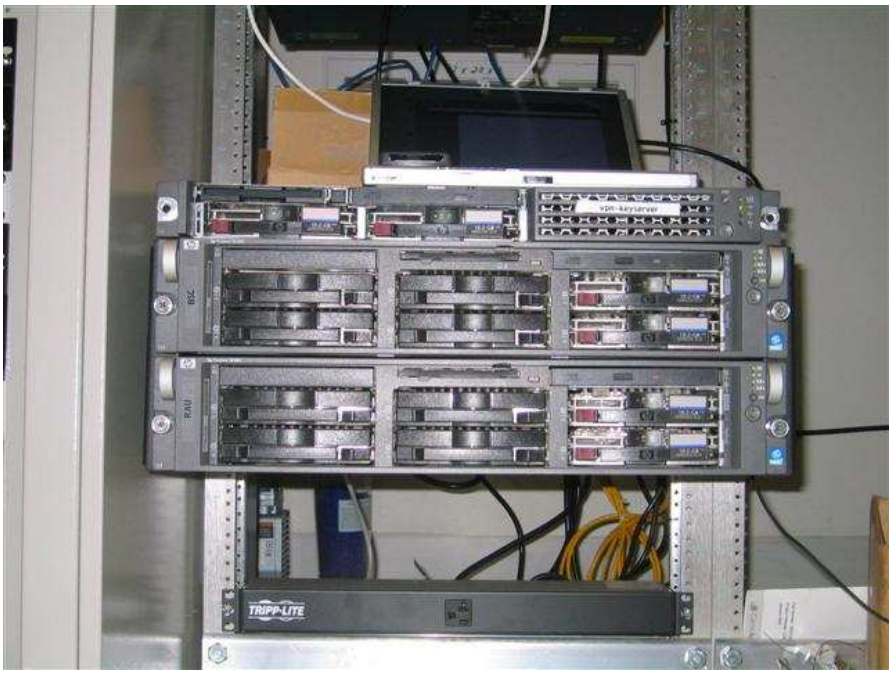

Figure 10: Key Server, BSC and TRAU Servers (top to bottom)

The HP Proliant server runs the BSC software on top of a Linux operating system. Messages to the rest of the system are sent from the ethernet port to LAN where the TRAU and the MSC connect or to the router where they travel over the T1 to the BTS sites. The iLO port is used to monitor and control the server remotely.

Connections

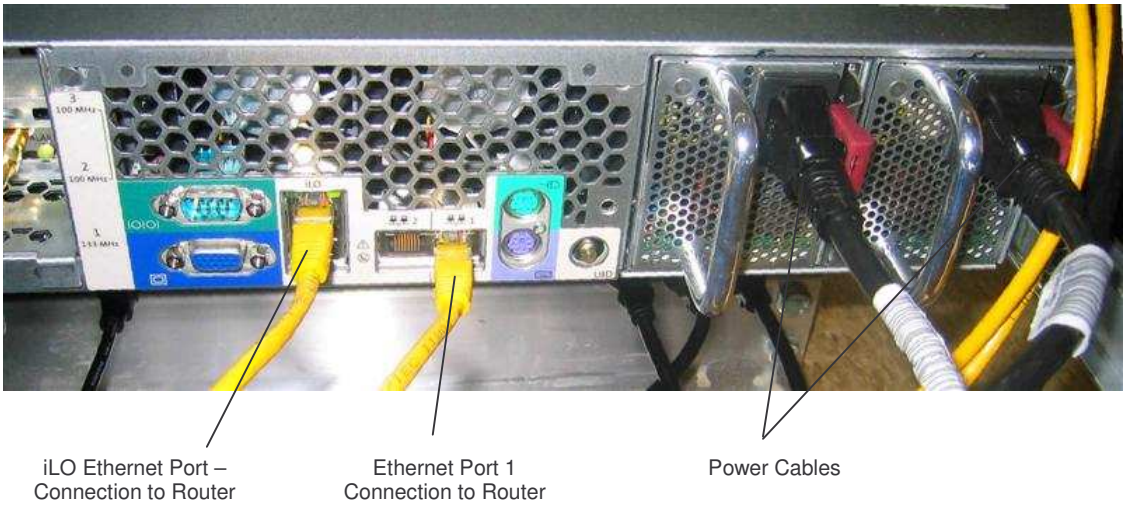

Figure 11: BSC and TRAU Server Connections

Qty	Connection
2	Power cables
1	Ethernet cable connecting ethernet port 1 to the router
1	Ethernet cable connecting the iLO ethernet port to the router

Troubleshooting

The power supplies should each show a green LED when the server is turned on. There are four LEDs on the front of the server by the power button. If one of the power supplies is not working, the heartbeat LED (second from the top) will be amber instead of green. The hard drive LEDs (the bottom two) will blink on and off as they are used. The hard drive LEDs will show red if there is an error with the hard drive.

TRAU Server

The HP ProLiant server runs the TRAU software on top of a Linux operating system. Messages to the rest of the system are sent from the ethernet port to the LAN where the BSC and the MSC sit, or to the router where they travel over the T1 to the BTS sites. The iLO port is used to monitor and control the server remotely.

Connections

Please refer to

Figure 11 for connection locations.

Qty	Connection
2	Power cables

1	Ethernet cable connecting ethernet port 1 to the router
1	Ethernet cable connecting the iLO ethernet port to the router

Troubleshooting

The power supplies should each show a green LED when the server is turned on. There are four LEDs on the front of the server by the power button. If one of the power supplies is not working, the heartbeat LED (second from the top) will be amber instead of green. The hard drive LEDs (the bottom two) will blink on and off as they are used. The hard drive LEDs will show red if there is an error with the hard drive.

Gigabit Ethernet Switch

The Gigabit Ethernet switch provides an ethernet LAN with 24 ports.

Connections

Figure 12: Switch Connections – Front

Figure 13: Switch Connections – Back

Qty	Connection
1	Power cable
	Any computer sitting on the 10.0.0.X subnet at the BSC site should be plugged in*

*Including the BSC, the TRAU, and the MSC components

Troubleshooting

Make sure that the power cord is plugged in and the switch is on. There is an LED corresponding to each ethernet port. Verify that the port you are interested in is behaving as expected: a 10Mb connection will be dark, a 100Mb connection will blink, and a 1Gb connection will be solidly lit.

VPN Key Server

Description

The VPN Key Server is running on a 1U HP Proliant server. It serves as an authentication server for the VPN software.

Connections

iLO Ethernet Port – Connections to Switch

2 Ethernet Ports – Connections to Switch

Power Cables

Figure 14: VPN Key Server Connections

Qty	Connection
2	Power cables
2	Ethernet cables connecting both of the 2 ethernet ports to the switch
1	Ethernet cable connecting the iLO ethernet port to the switch

Troubleshooting

The power supplies should each show a green LED when the server is turned on. The four LEDs on the front of the computer should all light up when the server is turned on. The top two are steadily lit, and the bottom two will flash on and off. If either of the bottom two are not on, check the ethernet connections.

VPN Router

The VPN router provides a secure outside connection to the Vanu, Inc. Software Radio network. It allows Vanu, Inc. engineers to monitor the system remotely, and upgrade the software when necessary. The VPN router can be connected directly to an external ethernet network. It is also possible to use network address translation in the BSC router to forward a T1 Internet connection directly to the VPN router.

Connections

Power Cable

Figure 15: VPN Router Connections

All of the connections are on the back of the router.

Qty	Connection
1	Power cable
1	Ethernet cables from the public ethernet port to the BSC router
1	Ethernet cable from the private ethernet port to the GigaSwitch

Troubleshooting

There is one LED labeled “SYSTEM” on the front of the VPN. This should be illuminated when the power is on. There are more LEDs on the back of the router. Each ethernet port has four LEDs. The two marked “LINK” and “100” should be lit. The one marked “TX” should blink from time to time. The one marked “COLL” may light up, but if it is often lit, there may be a problem with the switch, as it indicates collisions occurring on the ethernet network.

4. Acronym Glossary

BSC	Base Station Controller
BSS	Base Station Subsystem
BTS	Base Station transceiver Subsystem
COTS	Commercial off-the-shelf
GPS	Global Positioning System
HLR	Home Location Register
iLO	Integrated lights out HP remote management system
MSC	Mobile Switching Center
PA	Power amplifier
PCI	Peripheral Component Interconnect
PCS	Personal Communications Services
PPS Port	Pulse per second port
RH	Radio Head
SDR	Software Defined Radio
SMS	Short message service
TRAU	Transcoding rate adaptor unit
VoIP	Voice over Internet Protocol
VPN	Virtual Private Network

5. Index

B

BSC · 16
  Routers · 17
BSC Server · 19
BTS · 5
  Routers · 6
BTS Server · 7

G

Gigabit Ethernet Switch · 21
GPS Timing Source · 16

P

Powerwave Amplifier · 13
Protium RF Front End · 8

R

Routers · 6, 17
  BSC · 17
  BTS · 6

V

VPN Key Server · 22
VPN Router · 22