communications

Aviation Recorders
P.O. Box 3041
Sarasota, Florida 34230
CAGE Code 06141

L-3 CrewMate 840
Electronic Flight Bag
INSTALLATION & OPERATION MANUAL

PART NUMBERS:

DISPLAY UNIT	N01A10000X
AIRCRAFT INTERFACE UNIT	N01A20000X
DOCKING STATION	N01A30000X
DOCKING CABLE	N01A40000X
HOTEL KIT	N01A50000X

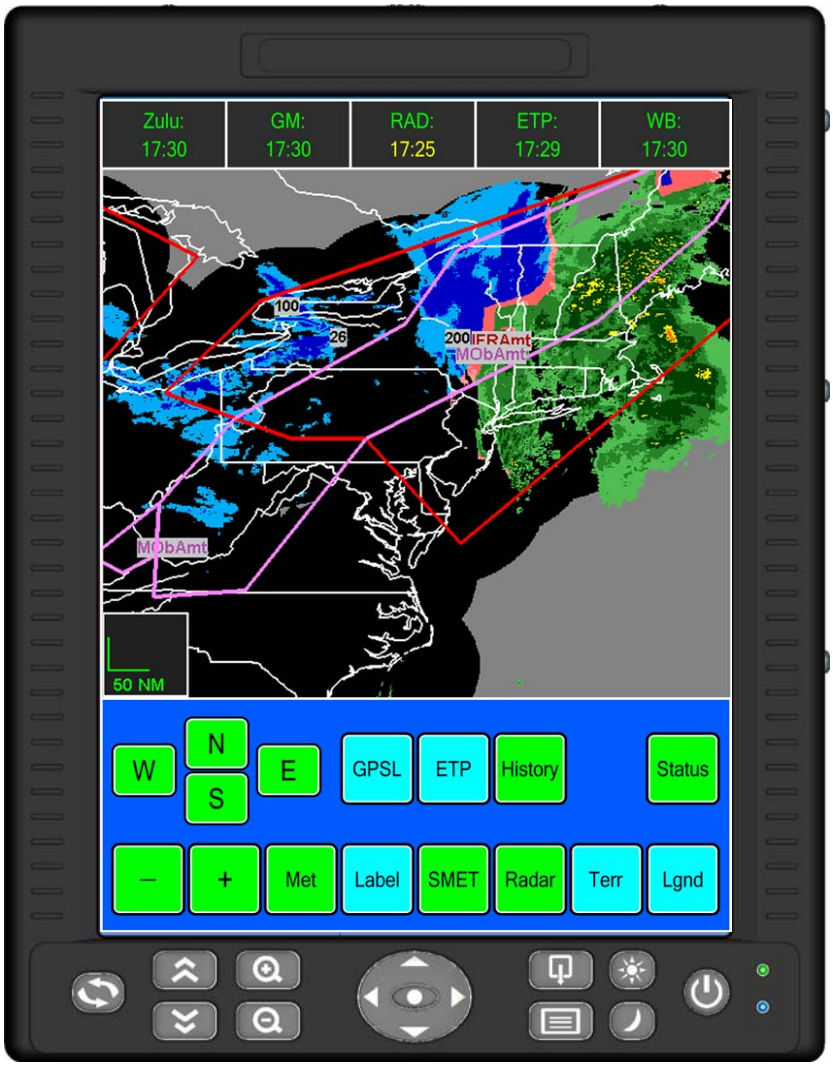

Revision 4
Feb. 17/15

P/N: 165E4860-00

CrewMate EFB Installation & Operation Manual
Part Number 165E4860-00
Revision 4
Feb. 17/15

EXPORT CONTROL STATEMENT ELECTRONIC FLIGHT BAG TECHNOLOGY / DATA:

The CrewMate 840 EFB products/software are being exported from the United States in accordance with the Export Administration Regulations ECCN 7E994, No License Required. Diversion contrary to U.S. law is prohibited. In accordance with U.S. Law (31 CFR Part 746, and Supplement No.1 to Part 774, and CFR Part 550) resale/re–export or transfer to the countries identified therein is prohibited without the prior written consent of the U.S. Department of Commerce.

HTSUS/Schedule B: 4901.10.0040, 4901.10.0000

This manual contains date sensitive information. To verify the latest revision level of this manual, visit our document download site at http://www.L–3ar.net.

REGULATORY STATEMENTS FOR FCC AND INDUSTRY CANADA:

FCC/Industry Canada Two Part Statement:

This device complies with FCC Part 15 and Industry Canada license exempt RSS standard(s). Operation is subject to the following two conditions: (1) this device may not cause interference, and (2) this device must accept any interference, including interference that may cause undesired operation of the device.

Cet appareil est conforme à FCC Partie15 d'Industrie Canada RSS standard exempts de licence (s). Son utilisation est soumise à Les deux conditions suivantes: (1) cet appareil ne peut pas provoquer d'interférences et (2) cet appareil doit accepter Toute interférence, y compris les interférences qui peuvent causer un mauvais fonctionnement du dispositif.

Modification Warning:

"Changes or modifications not expressly approved by the party responsible for compliance could void the user's authority to operate the equipment."

"Les changements ou modifications non expressément approuvés par la partie responsable de la conformité pourraient annuler l'autorité de l'utilisateur à utiliser cet équipement."

©Copyright 2015 by L-3 Communications Corporation Aviation Recorders

All rights reserved. No part of this manual may be reproduced or utilized in any form or by any means, electronic or mechanical, including photocopying, recording, or by information storage and retrieval system, without permission in writing.

Inquiries should be addressed to:
L-3 Communications Corporation
Aviation Recorders
Technical Publications
P. O. Box 3041
Sarasota, Florida 34230
(941) 371–0811
FAX: (941) 377–5591
CAGE Code 06141

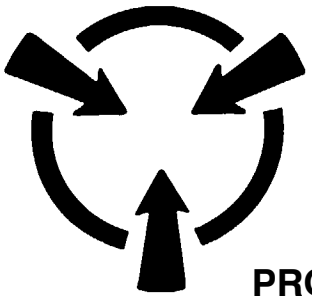

CAUTION

THE CONTENTS OF THE EQUIPMENT CAN BE DAMAGED BY STATIC ELECTRICITY. PROPER HANDLING IS REQUIRED.

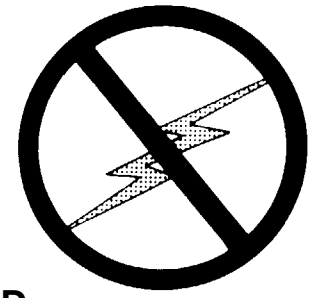

GENERAL

This product and related documentation must be reviewed for familiarization with safety markings and instructions before operation.

This instrument was constructed in an ESD (electrostatic discharge) protected environment. This is because most of the semiconductor devices used in this instrument are susceptible to damage by static discharge.

Depending on the magnitude of the charge, device substrates can be punctured or destroyed by contact or the mere proximity of a static charge. The results can cause degradation of device performance, early failure, or immediate destruction.

These charges are generated in numerous ways such as simple contact, separation of materials, and normal motions of persons working with static sensitive devices.

When handling or servicing equipment containing static sensitive devices, adequate precautions must be taken to prevent device damage or destruction.

Only personnel who are thoroughly familiar with industry-accepted techniques for handling static sensitive devices should attempt to service circuitry with these devices.

In all instances, measures must be taken to prevent static charge build-up on work surfaces and persons handling the devices.

BEFORE APPLYING POWER

Verify that the product is set to match the line voltage and that the correct fuses are installed.

Servicing instructions are for use by service-trained personnel only. To avoid dangerous electric shock, do not perform any servicing unless qualified to do so.

Adjustments described in the manual are performed with power supplied to the instrument while protective covers are removed. Energy available at many points may, if contacted, result in personal injury.

THIS PAGE IS INTENTIONALLY LEFT BLANK

SERVICE BULLETIN LIST

SERVICE BULLETIN	DATE	DESCRIPTION
1	July 15/11	*INTRODUCTION OF IMPROVED BONDING CHARACTERISTICS (J3)* Newly manufactured AIUs include a washer and nut on front panel connector J3, improving the bonding characteristics of the J3 connector.
2	May 15/12 Rev. 1	*MD1: INTRODUCTION OF IMPROVED ETHERNET CONNECTIVITY* The AIU interface circuit board has been updated to improve the Ethernet connectivity to the aircraft Ethernet.
3	May 16/12 Rev. 1	*MD1: INTRODUCTION OF IMPROVED ETHERNET CONNECTIVITY* The DU interface circuit board has been updated to improve the Ethernet connectivity to the aircraft Ethernet.
4	June 27/12 Rev. 2	*IMPROVED NETWORK CONNECTIVITY* Instructions for releasing and renewing the IP address acquired by the DU during initial boot up.
5	May 10/12 Rev. 1	*RESOLVING A LATCHED ETHERNET CONDITION* Instructions for releasing and renewing the IP address acquired by the DU during initial boot up.
6	May 14/12 Rev. 2	*INTRODUCTION OF SOFTWARE REVISION L* Provides changes to the default network settings which increases Ethernet network reliability. Includes a pre-defined GUI button allowing for the release and renew of the DU IP address on demand. The configuration file has been updated to allow for better communication with the DU bezel buttons, preventing inoperability of these functions.
7	May 8/12	*MANUAL NETWORK RE-CONFIGURATION* Alternate set of instructions in situations where the software update detailed in EFB Service Bulletin #6 can not be performed. This will re-configure the DU Ethernet settings into a more reliable configuration allowing for better network communication with the on-board network. These changes will remain in place after rebooting.
8	Aug. 9/12	*MD2: INTRODUCTION OF NEW PROCESSOR BOARD & HARD DRIVE* The processor board and hard drive used in the DU have gone obsolete. Replacement processor board and hard drive have been introduced as replacements.
9	Aug. 9/12	*MD2: INTRODUCTION OF NEW CIRCUIT BOARDS* New circuit boards have been incorporated into the AIU that include the modifications previously incorporated with MD1.
10	Apr. 16/13	*ENABLING OF WI-FI CAPABILITY* Instructions for enabling the Wi-Fi capability of Display Units shipped with Wi-Fi disabled.

THIS PAGE IS INTENTIONALLY LEFT BLANK

TABLE OF CONTENTS

Section **Page**

Introduction 1
1.0 Purpose of Manual 1
1.1 Equipment and Document Requirements 1
2.0 System Description 1
2.1 Overview 1
2.2 Accessory Overview 2
2.3 Hotel Kit Overview 2
3.0 Functional Description 2
3.1 CrewMate Configuration – Dual Redundant 2
3.2 Display Unit Configuration 3
3.3 Bezel Button Operation 5
3.4 Aircraft Interface Unit Configuration 5
3.5 Docking Cradle Configuration 6
3.6 Cross Talk 8
3.7 Operating System 8
Installation 9
4.0 Aircraft Interface Unit 9
4.1 Interface Cable 10
4.2 Docking Cradle 11
4.3 Display Unit 12
4.4 Pre-Installed Software 13
4.5 Microsoft Windows Update 14
4.6 Electronic Flight Bag Graphical User Interface Software 14
4.7 Software Installation Procedure 14
4.8 Touchscreen Calibration 16
5.0 Post-Installation Check Out 17
5.1 EFB Error Messages 18
5.2 ARINC 429 Interface 19
5.3 ARINC 429 Validation 20
Maintenance 23
6.0 Reliability 23
6.1 Maintainability 23
7.0 Scheduled Maintenance and Calibration 23
7.1 DU Screen Cleaning 23
7.2 Li–Ion Battery Particulars 23
7.3 Battery Electrical Check 23
7.3.1 Battery Electrical Check 23
7.3.2 Battery Physical Check 24
7.4 Battery Replacement 25
7.5 Coin Battery Replacement 25
7.6 Product Support 27
7.7 Authorized Repair Facilities 27
Aircraft Interface Unit Characteristics 29
Docking Assembly Characteristics 29
Display Unit Characteristics 29
Display Unit Touch Screen Characteristics 30
Display Unit Processing Characteristics 30
Display Unit LCD Characteristics 30

TABLE OF CONTENTS

Section	Page
Display Unit Backlight Characteristics	30
Applications	31
Reference Documents	33
8.0 FAA Documents	33
8.1 JAA Documents	33
8.2 Military Documents	33
8.3 Transport Canada Documents	33
8.4 Non-Government Documents	33
Hardware Durability and Reliability	35

LIST OF ILLUSTRATIONS

Figure	Page
1. L-3 CrewMate Dual Redundant Configuration Block Diagram	3
2. CrewMate Display Unit Block Diagram	3
3. CrewMate Display Unit in Portrait Mode	4
4. CrewMate Display Unit Dimensions (in Inches)	4
5. DU Front Bezel Key Reference	4
6. DU Top Bezel Reference	4
7. DU Connection Reference	5
8. CrewMate Aircraft Interface Unit	6
9. CrewMate Aircraft Interface Unit Dimensions (in Inches)	6
10. CrewMate Aircraft Interface Unit Block Diagram	6
11. CrewMate Docking Cradle Dimensions (in Inches)	7
12. EFB GUI Cross-Talk Icon	8
13. J1 Pin Outs	9
14. J2 Pin Outs	9
15. J3 Pin Outs	10
16. P4 Connector, Interface Cable	10
17. P1 Connector, Interface Cable	10
18. Docking Cable	10
19. Docking Cradle Assembly	11
20. Docking Cradle Assembly, Top View	11
21. Display Unit Seating, Front View	12
22. Display Unit Seating, Rear View	12
23. DU Seating, Right Side	12
24. DU Seating, Left Side	12
25. DU Seating, Rear	12
26. DU Seating Completed	13
27. EFB GUI Interface Icons	14
28. Setup GUI Display	15
29. Main Menu Configuration GUI Display	15
30. On-Screen Display Test	17
31. On-Screen Recalibration	17
32. DU Status Display	18
33. Tera Term Desktop Icon	20
34. Tera Term New Connection Window	20
35. Tera Term New Connection Window	20
36. DU Battery Access	24
37. DU Battery Access	25
38. Coin Battery Replacement	26

LIST OF TABLES

Table **Page**

1. L-3 CrewMate 840 Electronic Flight Bag Accessory Items 2
2. L-3 CrewMate 840 Electronic Flight Bag Software 2
3. Hotel Kit, p/n N01A50000X Items 2
4. List of A429 Supported Labels 19
5. A429 Label Format 21

THIS PAGE IS INTENTIONALLY LEFT BLANK

Introduction

1.0 Purpose of Manual

This Installation Manual applies to the following L-3 CrewMate 840 products:

Display Unit	N01A10000X	Docking Cable	N01A40000X
Aircraft Interface Unit	N01A20000X	Hotel Kit	N01A50000X
Docking Station	N01A30000X		

In this manual, these components are collectively referred to as the L-3 CrewMate 840, Electronic Flight Bag or EFB.

This manual contains date sensitive information necessary to install the L-3 CrewMate 840 in the aircraft, to operate the system, and to verify that the installed system is operating properly. This manual also describes the features and functions of the L-3 CrewMate 840 and associated accessories.

Note: Contact L-3 Communications, Aviation Recorders, to verify this date sensitive information when using this manual to develop other documentation. The L-3AR Publication index may be located at www.L-3ar.com or www.L-3ar.net.

Comments or recommendations about the installation, operation, and check out of the L-3 CrewMate 840 should be sent to L-3 Communications, Aviation Recorders, Product Support Department, at the address shown in section 7.0.

1.1 Equipment and Document Requirements

The following equipment and documents are, or may be, required for on-aircraft installation and check out of the L-3 CrewMate 840:

- This Installation Manual.

2.0 System Description

2.1 Overview

The L-3 CrewMate 840 Electronic Flight Bag (EFB) is a portable electronic device which stores and displays data commonly required by pilots and which is currently carried on board in paper format. This data may include approach plates, flight manuals, operation manuals, flight checklists, and other maps and documentation. Data displayed and stored is a function of applications selected and installed by the end user.

In addition, the L-3 EFB contains provisions for displaying weather information, a video monitoring function capable of displaying video from on−board cameras for cabin monitoring and other uses, and provisions for a variety of common avionic interfaces. These provisions for growth ensure long−term system usefulness and functionality.

The L-3 EFB installs in a mounting device in the aircraft cockpit during normal operations. The EFB receives power and data from the aircraft via the mounting device, thus meeting the description of a class 2 EFB as defined in the FAA's advisory circular AC120-76A. A separate Aircraft Interface Unit (AIU) provides the electrical interface between the Display Unit (DU) and the aircraft.

The L-3 EFB can be arranged as a dual redundant configuration, with a DU and an AIU for pilot and co-pilot. In this configuration the L-3 EFB provides a cross talk function which allows data on one EFB to be passed to the other EFB.

2.2 Accessory Overview

Table 1 contains a summary description of the L-3 CrewMate 840 Electronic Flight Bag (EFB) accessory items covered in this manual.

Table 1. L-3 CrewMate 840 Electronic Flight Bag Accessory Items

Part Number	Description	Weight (lb)
N01A10000X	Display Unit	4.0
N01A20000X	Aircraft Interface Unit	2.4
N01A30000X	Docking Station	0.5
N01A40000X	Docking Cable	0.3
N01A50000X	Hotel Kit	Undetermined at this time.

Table 2 contains a summary description of the L-3 CrewMate 840 Electronic Flight Bag (EFB) software covered in this manual.

Table 2. L-3 CrewMate 840 Electronic Flight Bag Software

Part Number	Description
N01A01600001	Software, EFB Main GUI
N01A01600002	Software, EFB ARINC Interface
N01A01600003	Software, EFB Video Interface
N01A01600004	Software, EFB Keypad Service

2.3 Hotel Kit Overview

Table 3 contains a summary description of the contents of the Hotel Kit, p/n N01A50000X, for use with the L-3 CrewMate 840 Electronic Flight Bag (EFB).

Table 3. Hotel Kit, p/n N01A50000X Items

Part Number	Description	Weight (lb)
999100002	Computer Briefcase w/ Retractable Shoulder Strap	Undetermined at this time.
994000066	Switching Power Supply, VIN 90-264 VAC, VOUT 12VDC	Undetermined at this time.
992015017	Mini Desk Keyboard, Black	Undetermined at this time.
992015018	USB Optical Wheel Mouse, Logitech SBF-96	Undetermined at this time.

3.0 Functional Description

3.1 CrewMate Configuration – Dual Redundant

The dual redundant EFB system consists of an Aircraft Interface Unit (AIU) and a Display Unit (DU) for the left and right pilot positions. One (1) DU mounts on an installation assembly to the left of the left pilot position and the other DU mounts on an installation assembly to the right of the right pilot position. The installation assembly is unique to the aircraft and exact placement is determined by the airframe installer.

The DUs mount to the installation assemblies via a Docking Assembly which makes the electrical and mechanical connections. The Docking Assembly provides for easy removal and installation of the DUs. The DUs contain internal batteries, so they can be operated either while installed in the mount or handheld while disconnected from the docking station.

The AIUs mount in the cockpit near the DUs. As installation varies with aircraft and is at the discretion of the installer, installation assemblies are not part of this manual.

Figure 1 is the block diagram for the dual redundant L-3 CrewMate 840 EFB configuration.

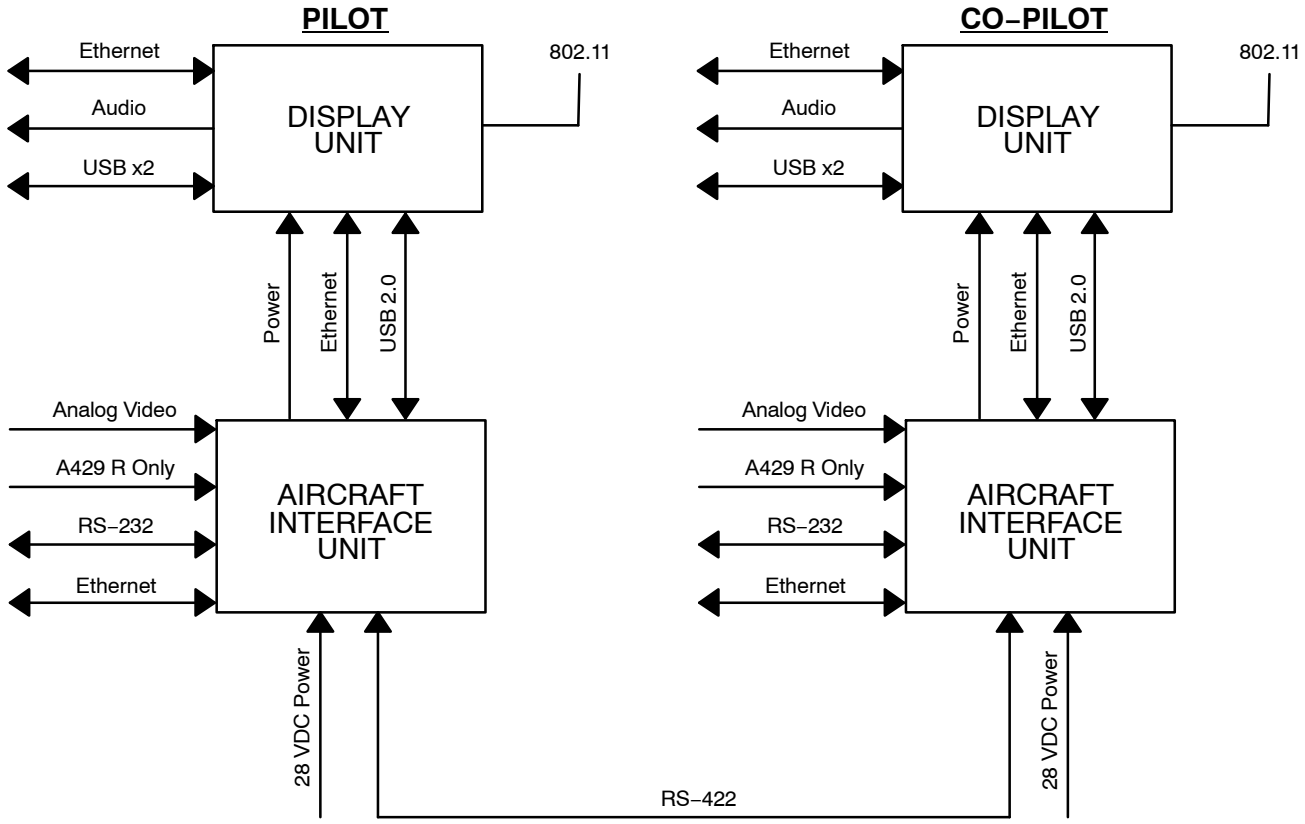

Figure 1. L-3 CrewMate Dual Redundant Configuration Block Diagram

3.2 Display Unit Configuration

The DU is a standalone tablet computer with integral data storage. The primary operator interfaces are via bezel mounted switches and the infrared touch screen. Figure 2 is a block diagram of the EFB Display Unit. Each DU hosts the applications and data base independently of the other DU.

The DU to AIU electrical interfaces are USB, Ethernet, and power. DUs are identical and interchangeable between left and right pilot positions. Figure 3 shows the Display Unit in portrait and Figure 4 shows the DU dimensions.

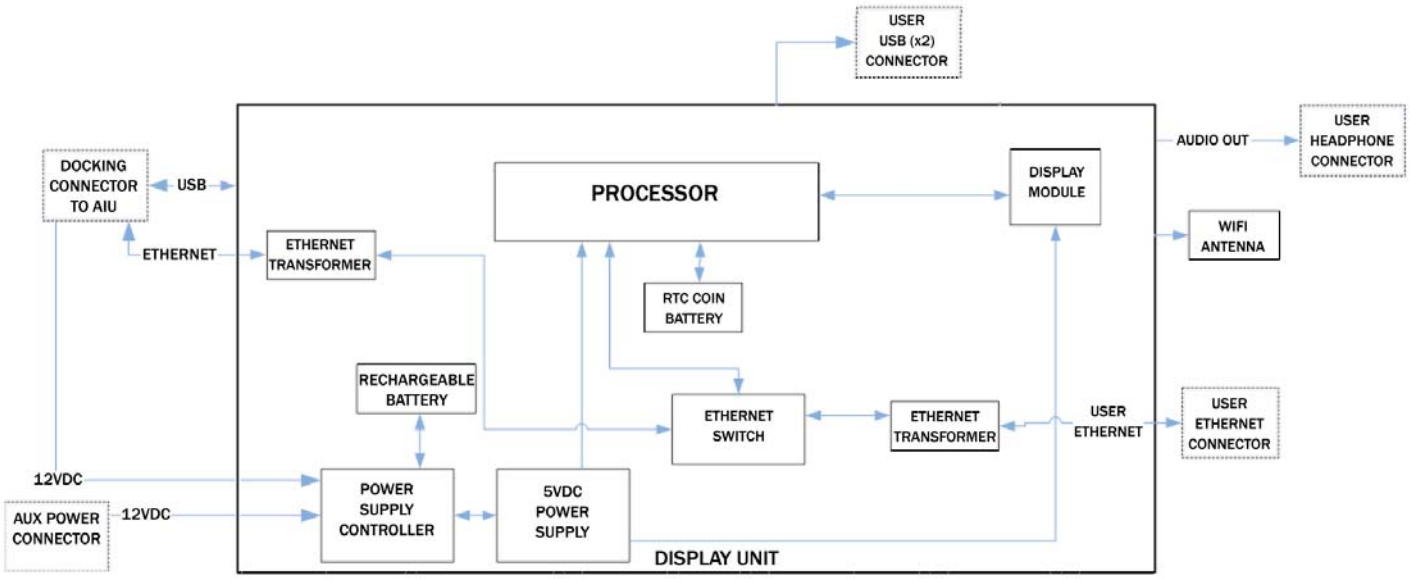

Figure 2. CrewMate Display Unit Block Diagram

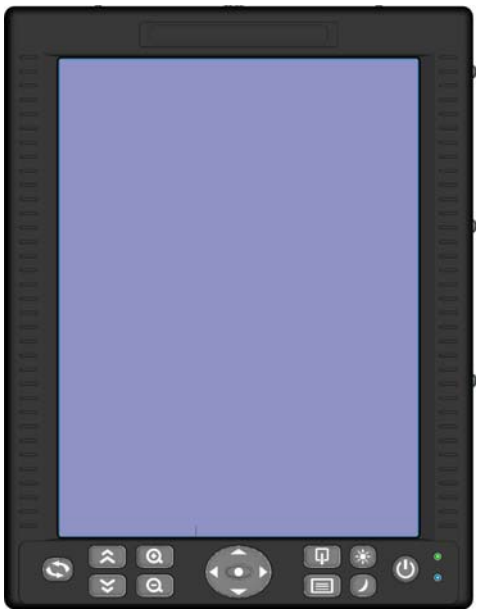

Figure 3. CrewMate Display Unit in Portrait Mode

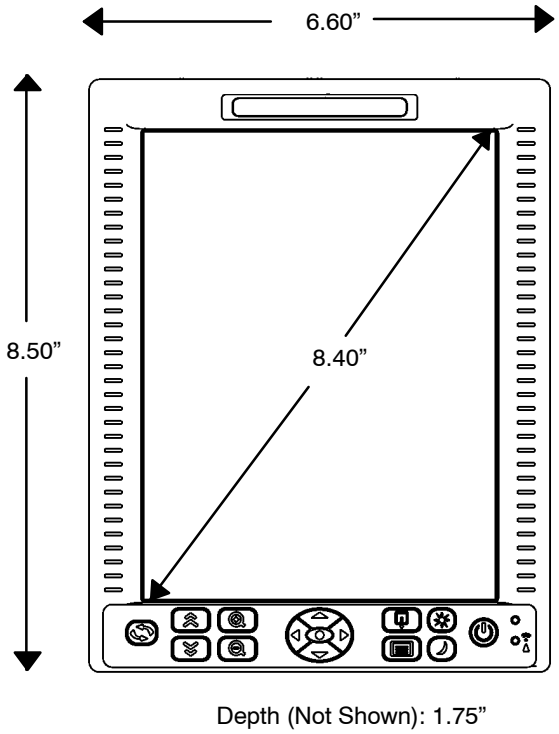

Figure 4. CrewMate Display Unit Dimensions (in Inches)

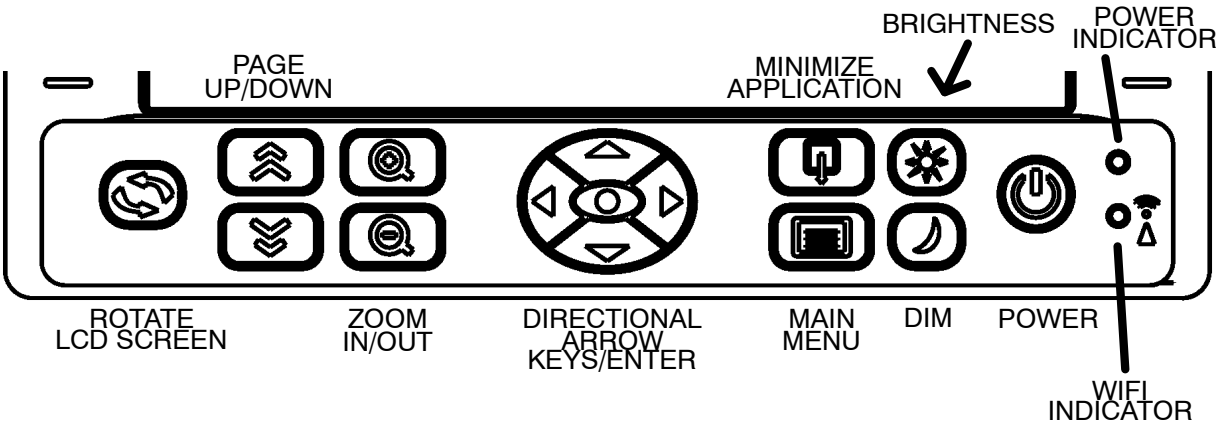

Figure 5. DU Front Bezel Key Reference

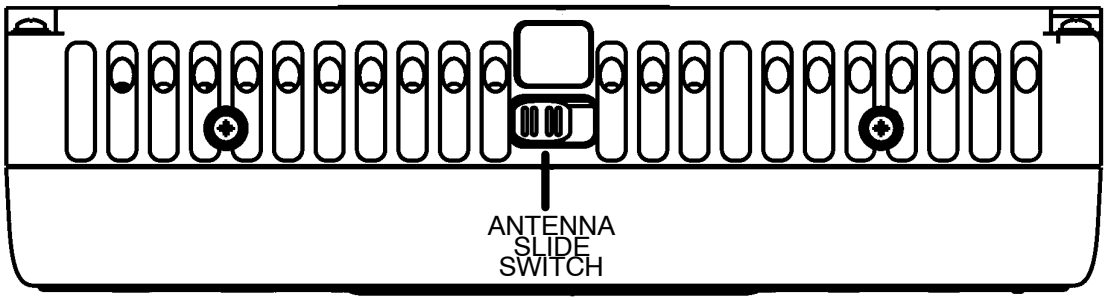

Figure 6. DU Top Bezel Reference

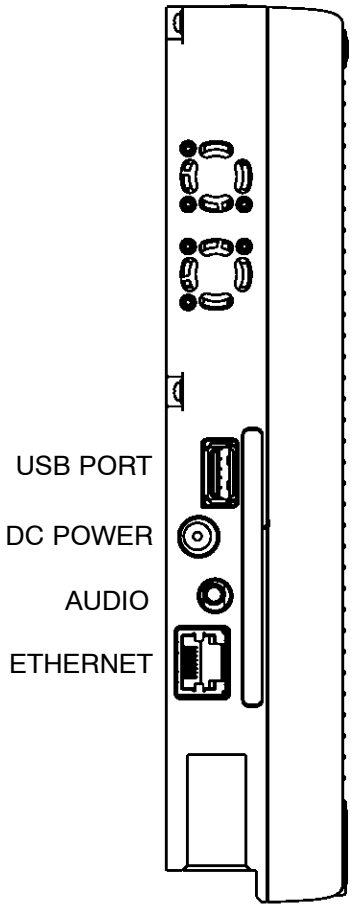

Figure 7. DU Connection Reference

3.3 Bezel Button Operation

Rotates the display 90 degrees.

Scrolls upwards.*

Scrolls downwards.*

Increases magnification.*

Decreases magnification.*

Minimizes active application window.

Returns to main GUI menu.

Increases display brightness.

Decreases display brightness.

Single press powers on / off the display unit.
Extended press immediately powers off display unit.

Directional navigation pad.
Center button used for enter.

* May not be compatible with all applicatic

3.4 Aircraft Interface Unit Configuration

The Aircraft Interface Unit is the electrical interface between the Display Units and the aircraft. The AIU supports a single DU. Figure 8 shows the Dual Redundant AIU and Figure 9 shows a dimensioned view of the AIU. Figure 10 is a block diagram of the Aircraft Interface Unit.

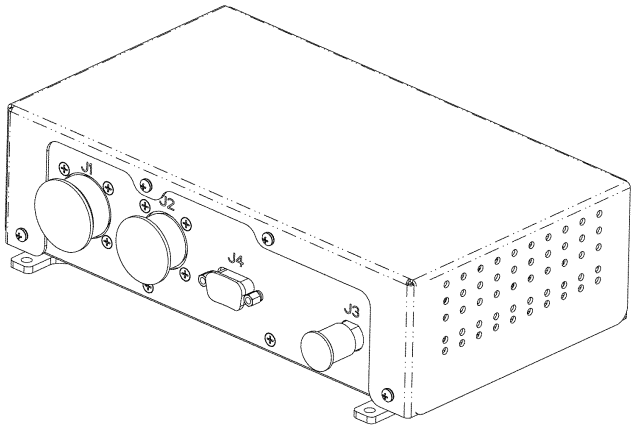

Figure 8. CrewMate Aircraft Interface Unit

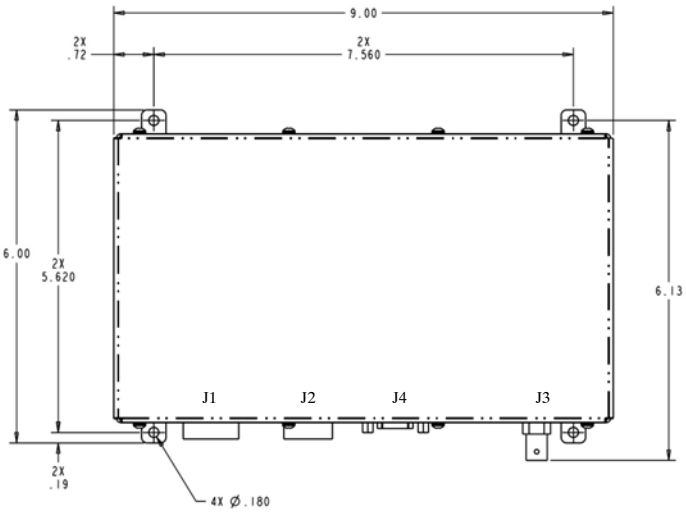

Figure 9. CrewMate Aircraft Interface Unit Dimensions (in Inches)

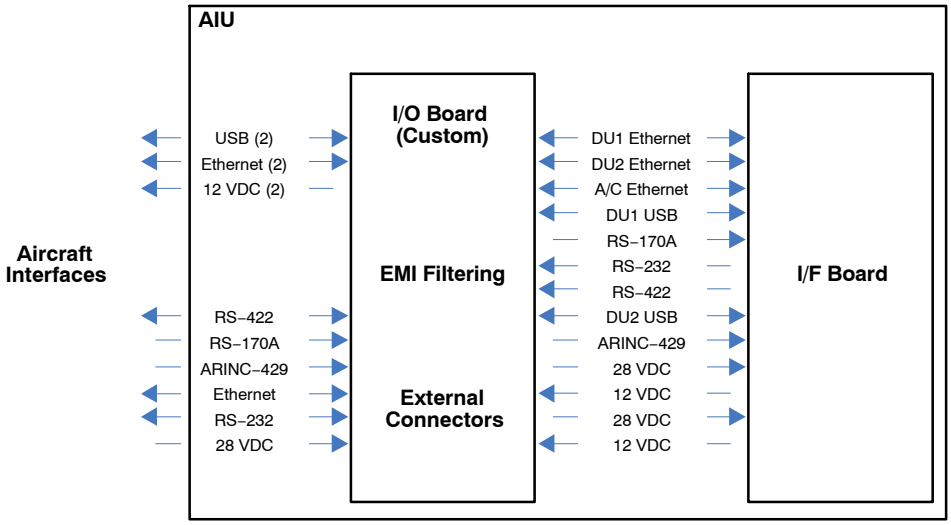

Figure 10. CrewMate Aircraft Interface Unit Block Diagram

3.5 Docking Cradle Configuration

The Docking Cradle is the holding fixture for the AIU when it is placed in the aircraft.. The Docking Cradle holds a single AIU. Figure 11 shows the Outline and Dimensions for the Docking Cradle.

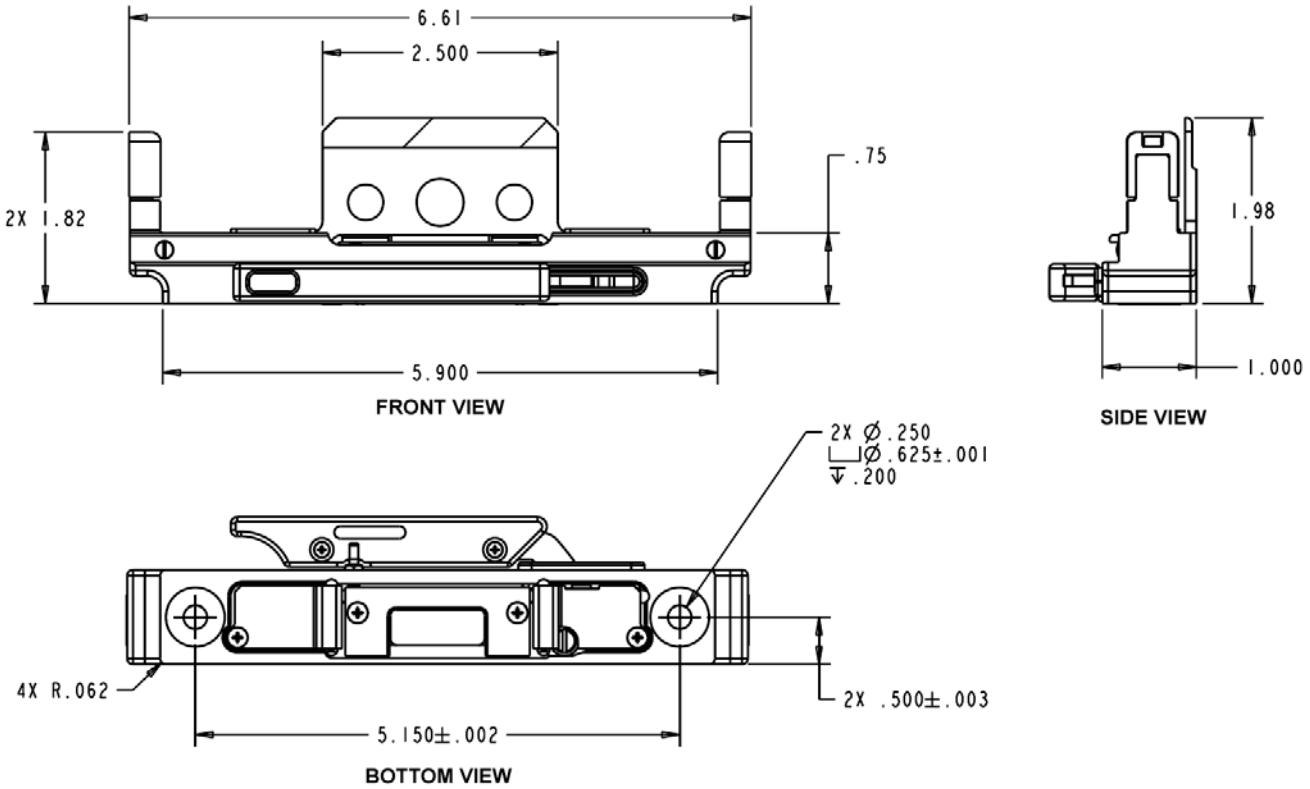

Figure 11. CrewMate Docking Cradle Dimensions (in Inches)

3.6 Cross Talk

The L-3 CrewMate 840 system has the capability for the Display Units to communicate with each other.

The cross talk capability has the following characteristics:

a. ‘Pull’ configuration (defined as one pilot taking from the other pilot’s display).
b. Screen capture and transfer

Pressing the Cross-Talk button (Figure 12) on the GUI initiates the “Pull” function. When the Cross-Talk function is used, the initating Display unit will obtain a static screen shot of the other connected Display Unit. The initated Display Unit will then present this static screen shot for viewing. The screen shot is non-interactive and non-updating, the Cross-Talk function must be used again if the viewer wishes to see an updated screen.

CROSS–TALK

Figure 12. EFB GUI Cross-Talk Icon

3.7 Operating System

The DU uses Microsoft Windows® 7 operating system (OS) and is capable of hosting Windows® software.

The CrewMate EFB supports applications including pre-composed, fixed presentations of data currently presented in paper format (Type A) and dynamic, interactive applications which can manipulate data and presentation (Type B) per AC 120-76A.

The OS allows multiple applications to be open simultaneously.

Installation

4.0 Aircraft Interface Unit

The AIU should be mounted in the cockpit near the DU and should be electrically bonded to the aircraft structure at $\leq$ 2.5 milliΩ. The AIU connects to the DU via an interface cable. The interface cable is connected to J4 on the AIU, and the Docking Cradle on the DU side. This connection also provides power to the DU. This connection is covered in detail in Section 4.1.

The AIU requires a quarter inch clearance at its main fan intake to allow adequate airflow for cooling purposes.

The AIU is connected to the aircraft via the J1 and J2 connections as detailed in Figure 13 and Figure 14. An interface cable connects the DU to the AIU via a cable routed to mounting assembly. The J3 connector, detailed in Figure 15, provides the video input to the AIU.

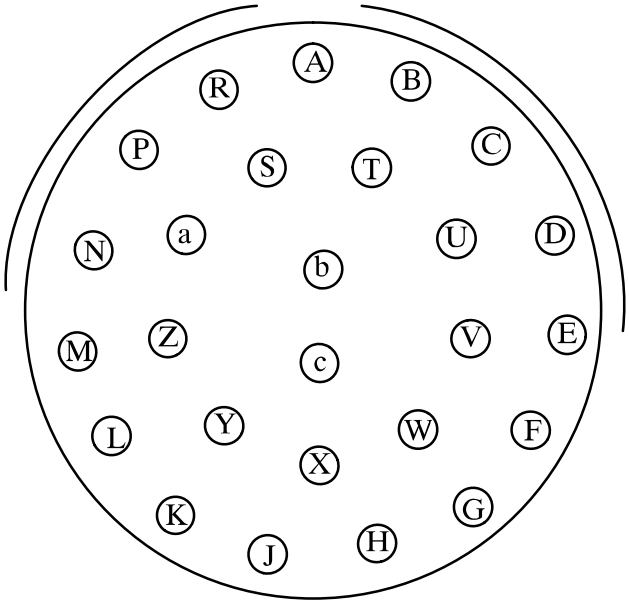

Pin	SIGNAL	Pin	SIGNAL
A	28 VDC	P	RS232 DCD
B	28 VDC RTN	R	RS232 DTR
C	CHASSIS	S	RS232 RTS
D	SPARE	T	RS232 RI
E	SPARE	U	SPARE
F	RS232 RXD	V	SPARE
G	RS232 TXD	W	RS232 GND
H	SPARE	X	SPARE
J	SPARE	Y	SPARE
K	ARINC429 RXH	Z	SPARE
L	ARINC429 RXL	a	RS232 CTS
M	SPARE	b	RS232 DSR
N	SPARE	c	SPARE

PINS F, G & W are Shielded Triple Cable

PINS K & L are Shielded Twisted Pair

Figure 13. J1 Pin Outs

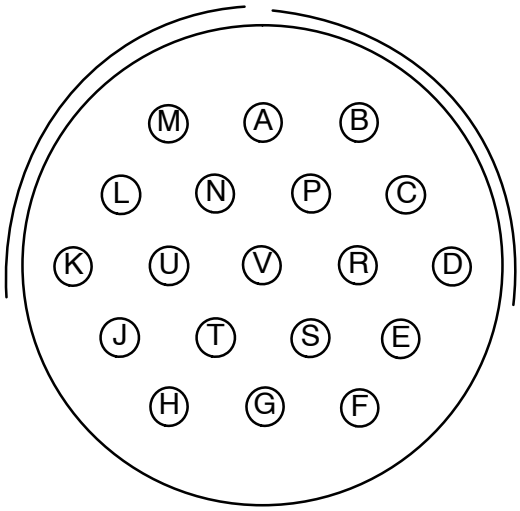

Pin	SIGNAL	Pin	SIGNAL
A	SPARE	P	SPARE
B	ETH TX+	R	ETH RX−
C	ETH TX−	S	SPARE
D	ETH RX+	T	RS422 CTS+
E	SPARE	U	RS422 CTS−
F	SPARE	V	SPARE
G	SPARE		
H	RS422 RTS+		
J	RS422 RTS−		
K	RS422 TX+		
L	RS422 TX−		
M	RS422 RX+		
N	RS422 RX−		

PINS B & C are 100−ohm Twisted Pairs, Shields to EMI Backshell

PINS D & R are 100−ohm Twisted Pairs, Shields to EMI Backshell

PINS K & L are Twisted Pairs, Shields to EMI Backshell

PINS M & N are Twisted Pairs, Shields to EMI Backshell

PINS H & J are Twisted Pairs, Shields to EMI Backshell

PINS T & U are Twisted Pairs, Shields to EMI Backshell

Figure 14. J2 Pin Outs

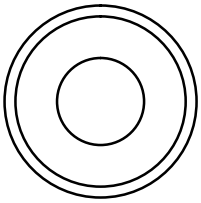

Pin	SIGNAL	NOTES
I	VID IN	
SHIELD	CHASSIS	OUTER SHIELD

Figure 15. J3 Pin Outs

4.1 Interface Cable

The Interface Cable connects the AIU to the DU via the J4 connector on the AIU and the docking assembly on the DU. The EFB operates with DU to AIU cable lengths of up to 30 feet.

The P4 plug (Figure 16) of the interface cable connects to the J4 connector of the AIU. The P1 plug (Figure 17) of the interface cable connects to the Docking Cradle.

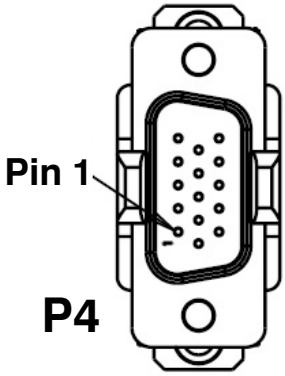

Figure 16. P4 Connector, Interface Cable

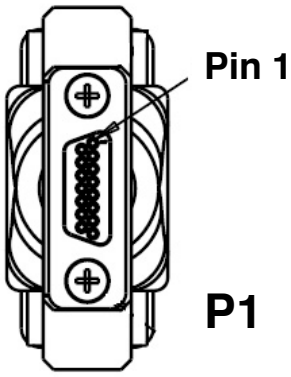

Figure 17. P1 Connector, Interface Cable

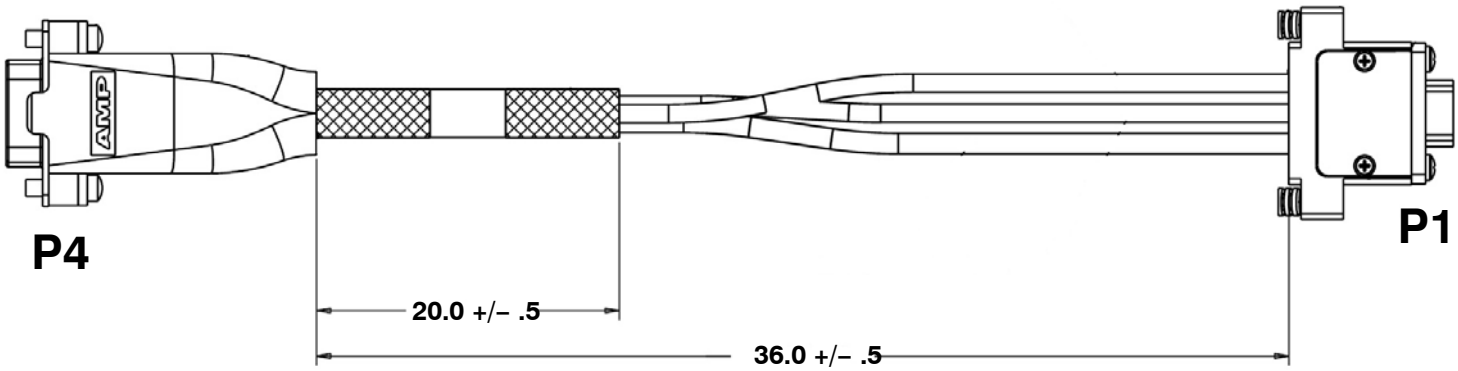

Figure 18. Docking Cable

4.2 Docking Cradle

The Docking Cradle assembly provides mechanical and electrical connections to the DU and supports the DU installation in both portrait or landscape orientations. The Docking Cradle mounts to the aircraft structure or a mechanical articulating arm using the 2 mounting holes and size 10-32 fasteners. The DU connector is potted in the Docking Cradle so proper allowances must be made for the cable exit from the bottom of the Docking Cradle.

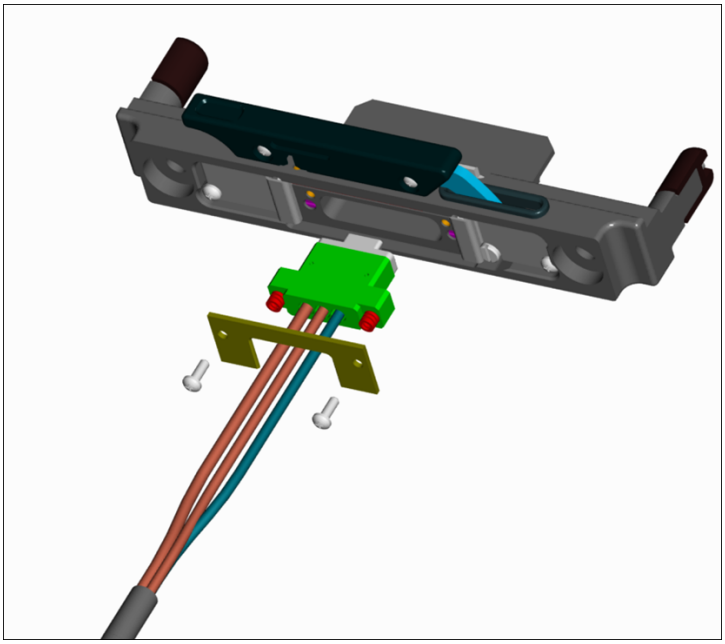

Figure 19. Docking Cradle Assembly

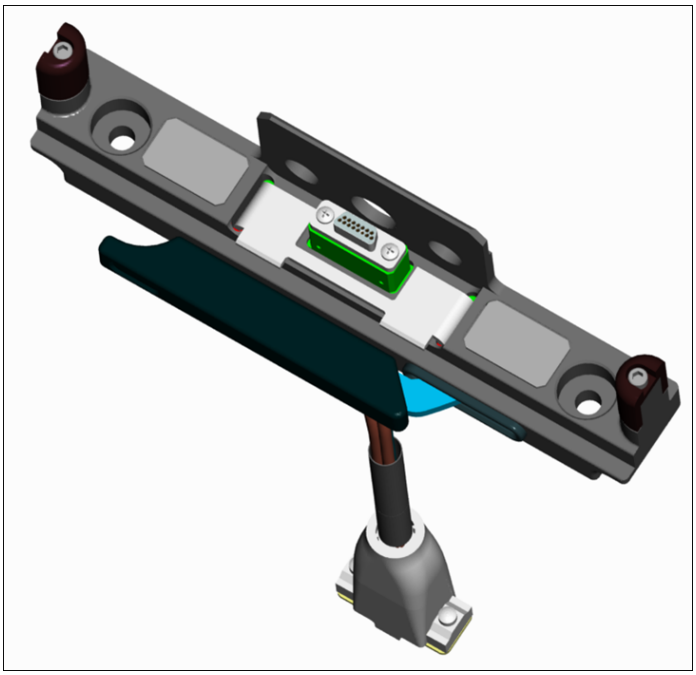

Figure 20. Docking Cradle Assembly, Top View

4.3 Display Unit

The Display Unit attaches to the cockpit via the Docking Cradle assembly so as to position the DU for convenient viewing and operation by the pilot.

No pressure or force is required to seat the DU into the Docking Cradle. Seating is accomplished by pulling the Docking Cradle latch forward and then placing the DU in the Docking Cradle as shown in Figure 21 and Figure 22. The upward side stands of the Docking Cradle should slide into the recessed grooves on the sides of the DU as shown in Figure 23 and Figure 24. In addition, the center stand of the Docking Cradle should slide underneath the rear catch of the DU as shown in Figure 25.

NOTE: The Display Unit should be placed in the Docking Cradle by force of gravity alone. It is not necessary to apply pressure to complete the data connection between the DU and the Docking Cradle. Using excessive force in this manner can damage the DU, Docking Cradle and articulating arm.

Figure 21. Display Unit Seating, Front View

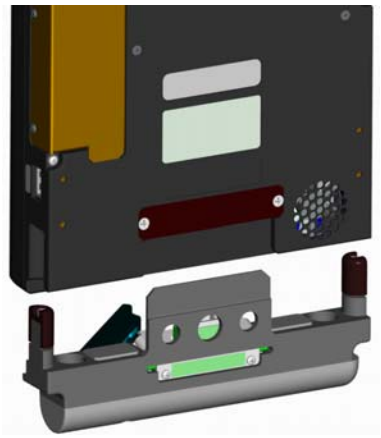

Figure 22. Display Unit Seating, Rear View

Figure 23. DU Seating, Right Side

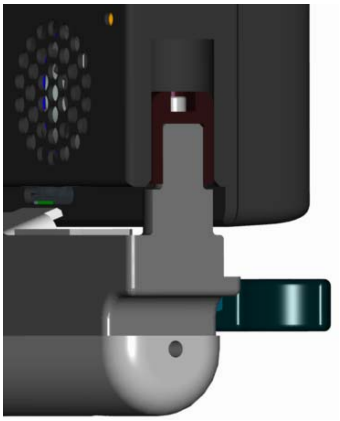

Figure 24. DU Seating, Left Side

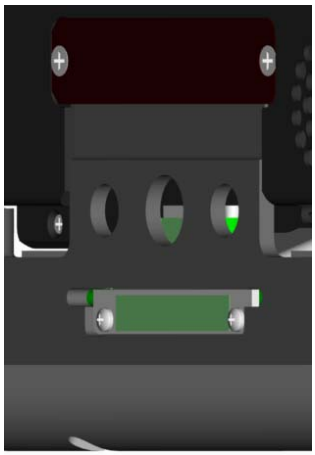

Figure 25. DU Seating, Rear

Once the DU is properly placed in the Docking Cradle the front latch of the Docking Cradle should be closed. The latching mechanism will pull down and seat the DU into the connector and secure as shown in Figure 26. The latch should close smoothly and easily, if this is not the case then it is possible that the DU has not been placed properly. In this situation, return the latch to the open position, lift the DU from the Docking Cradle, carefully place the DU back into the Docking Cradle and attempt to close the latch again.

NOTE: Do not attempt to force the latch closed if it provides resistance. Forcing the Docking Cradle latch can damage the DU and the Docking Cradle.

Figure 26. DU Seating Completed

The DU is removed from the Docking Cradle by opening the latch and lifting the DU up.

The DU receives power, signals and data from the AIU, and provides two user-accessible USB ports. When the DU is seated in the Docking Cradle it operates from Aircraft power provided by the AIU. The DU will continue to operate from internal power while in the Docking Cradle if Aircraft power is removed.

When not seated in the Docking Cradle, the DU can operate from power provided by a power adapter or its internal battery.

The DU requires no special considerations for cooling. The DU fan, located on the lower rear of the unit, is designed to function with adequate airflow when the DU is placed on any flat surface. The operation of the fan is controlled by the DU system and will turn the fan on and off as needed. This fan requires a tenth of inch clearance in order to provide adequate airflow.

Should the main fan fail to activate, the DU will display an on-screen fan error message to alert the user to the failure.

4.4 Pre-Installed Software

The Display Unit comes with Windows 7 pre-installed, this installation also includes Microsoft .NET Framework 2.0 and .NET Framework 3.0. In addition the drivers for Sensory Video, the IR Touchscreen, the EFB hardware, the VGA screen and Ethernet are also pre-installed.

4.5 Microsoft Windows Update

The DU comes supplied with the Microsoft Windows Update option turned off.

Microsoft Windows updates should be applied by the DU administrator in a non-aircraft environment. This is due to the potential time required to wirelessly download a large update and the subsequent installation process.

4.6 Electronic Flight Bag Graphical User Interface Software

The Electronic Flight Bag Graphical User Interface (GUI) comes installed on the DU and is set to automatically run when the unit is powered up. This interface completely obscures the Windows XP interface and becomes the primary method of user interaction with the DU.

The EFB GUI provides an easy to navigate customizable interface. The administrator of the DU is able to customize the menu structure of the GUI, allowing grouping of related programs. Frequently accessed programs can be placed on the top menu allowing easy access.

Customization of the menu structure is accomplished by accessing the Setup screen. The Setup screen is protected behind an administrator's password, preventing unauthorized modification of the DU system.

In addition, installation of additional software is accomplished through the password protected Setup screen. This prevents unauthorized software from being installed without the administrator's knowledge.

Access to the Windows 7 interface is also blocked behind the Setup screen.

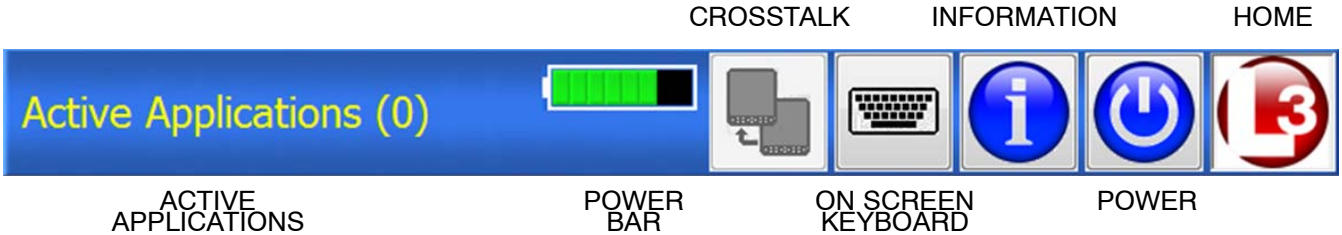

Figure 27. EFB GUI Interface Icons

- **ACTIVE APPLICATIONS**
  The Active Applications status bar shows the number of currently running programs in the parentheses at the end of the bar.
- **POWER BAR**
  The Power Bar shows a graphical representation of the amount of power left in the DU battery. When fully powered the power bar is represented by eight small boxes. The boxes are green in color when the DU battery is charging and amber in color when the battery is discharging.
- **CROSSTALK**
  The Crosstalk button allows the screen on one DU to be shared with another DU when used in a dual redundant configuration.
- **ON SCREEN KEYBOARD**
  The On Screen Keyboard button brings up a QWERTY style touch keyboard on the display screen.
- **INFORMATION**
  The Information button brings up the status screen which shows the current unit status.
- **POWER**
  The Power button is used to shutdown and power off the DU.
- **HOME**
  The Home button returns the DU to the initial start screen.

4.7 Software Installation Procedure

The L-3 CrewMate 840 EFB is delivered with Windows 7 installed. It is up to the customer to install additional applications as needed and to configure those applications to run from the EFB Main Menu.

Installation of additional applications requires administrator privileges. To install additional software, the administrator must access the Setup Menu via the Setup icon button at the top of the main menu as shown in Figure 27.

The administrator will be prompted for a password to enter the Setup page. If a password was not previously established, or if the administrator forgets the password, he/she should use the test “L3DSADMIN”.

After entering the password, the administrator will see the Setup Menu shown in Figure 28.

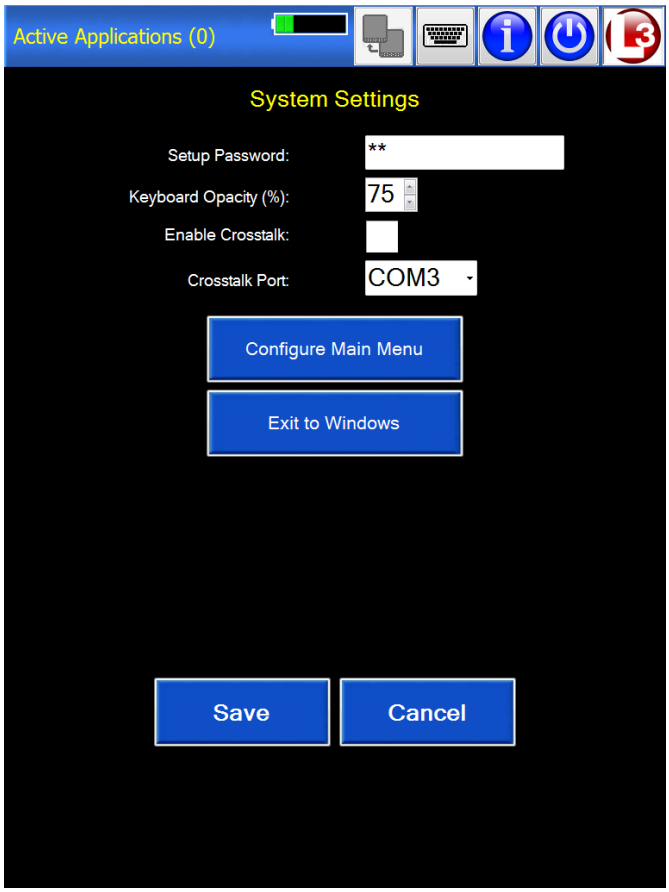

Figure 28. Setup GUI Display

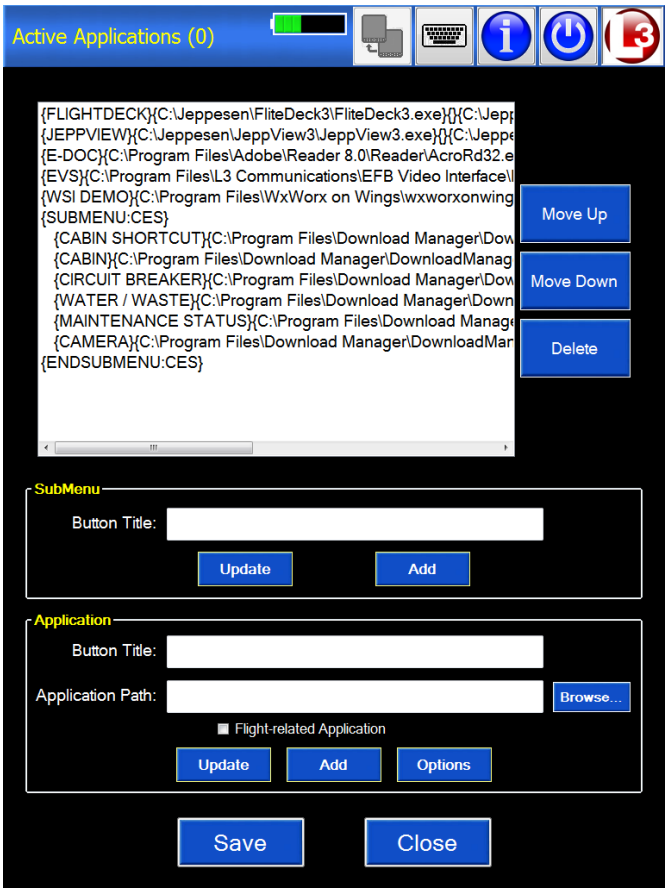

Figure 29. Main Menu Configuration GUI Display

On this page, the administrator has the option of changing (or establishing) the password, setting the Crosstalk COM port number and setting the on-screen keyboard opacity percentage. Note that changes to the OSK opacity setting will not take affect until restarting the unit or after exiting and returning to the EFB GUI software. A password added on this screen will be in addition to the default password which will always be “L3DSADMIN”.

To install additional software, the administrator selects the “Exit to Windows” button, which will close the EFB GUI. This will provide the administrator with access to the Windows 7 desktop, at which point the installation can be completed as per the software application’s installation instructions.

Once the application has been installed, the administrator will then need to create a launch button for the application. This is performed within the Main Menu GUI, the administrator can return to the EFB GUI by running the Main Menu GUI from the start menu, located under Programs, L–3 Communications, Main GUI.

To create a launch button within the EFB GUI the administrator must return to the Setup display by selecting the “Setup” button located in the upper right corner of the screen. The administrator will then be presented with the password screen again.

Once the Setup Menu appears the administrator will then need to select the “Configure Main Menu” button. The administrator will then be presented with the Main Menu Configuration screen as shown in Figure 29.

The L-3 CrewMate 840 EFB is delivered with some example buttons configured in the Main Menu. These are displayed in the scroll list in Figure 29. Each line in the scroll list represents an application button, unless the line contains “SUBMENU” or “ENDSUBMENU.” An application button configured within the “SUBMENU” and “ENDSUBMENU” lines will be displayed in the menu hierarchy as part of the defined submenu screen.

While the GUI can be configured with an unlimited number of nested Sub Menus it is suggested that configurations not exceed 5 to 6 sub levels. Sub menus deeper than this can create a configuration that is difficult to navigate.

When a line in the scroll list is selected, the information is parsed and appears in group boxes at the bottom of the screen. The user can modify the existing information by making changes and selecting the “Update” button in the group box.

If a new button is wanted, the “Add” button should be selected. When the “Add” button is selected, a new line will appear in the scroll list that defines the button. This new line will appear below the selected line.

The order in the scroll list dictates the order that the buttons will appear on the Main Menu. The order can be modified by selecting a line to be moved and using the “Move Up” or “Move Down” keys.

NOTE: All new entries must be added with the “Add” button before the “Update” button is used. After finding an application to add to the menus the administrator must enter the title and application path to be added and then select the “Add” button before doing anything else.

Hitting the “Update” button will overwrite whatever was highlighted on the screen and there is no undo option. Adding Optional information will not be placed into the menu until the “Update” button is selected.

The information needed for an application launch button consists of the following:

- Button Title: The text that will appear on the button in the Main Menu.
- Application Path: The path to the application¿s executable file. The “Browse¿” button provides a find file dialog to assist in configuration.
- Cmd Line Arguments: (Optional) This field enables the administrator to define additional arguments to be passed to the application. This field is useful if the administrator wants to set application parameters or other similar actions.
- Working Directory: (Optional) This field sets the working directory of the selected application. Many Windows XP applications require this reference to be the installation directory in order to run properly.

To configure a SubMenu, the administrator needs to enter the Button Title only. Selecting the “Add” button will insert two lines into the scroll list – for the start and end of the defined SubMenu. The administrator can then add application launch buttons to the SubMenu using the previous instructions or move existing buttons into the SubMenu. SubMenus can be layered within each other as desired. Each new SubMenu level will cause an indentation of the scroll list line to assist with configuration.

After the configuration is complete, the administrator must select the “Save” button at the bottom of the screen. This new configuration will be applied the next time the EFB GUI starts (upon power–cycle of the unit, or closing and launching again from the Start menu).

4.8 Touchscreen Calibration

The L-3 CrewMate 840 EFB requires a touchscreen calibration in order to insure proper interaction. This calibration is performed though the use of the IRTouchscreen Calibration icon located on the DU desktop. When this calibration is run the interface will prompt the user to use the pointer to write on the touch screen as shown in Figure 30. When this is done the pointer will leave a writing trail for the user to check.

If the on-screen writing satisfactorily resembles what the user intended, then the user can select the Cancel button to exit the recalibration tool.

If the on-screen writing does not resemble what the user intended, then the user can select the ReCalibrate button. When this option is selected the interface will provide on-screen bullseyes as shown in Figure 31. The user must touch the center of these bullseyes to align the DU sensitivity. After each bullseye is touched the DU will return to the Test screen shown in Figure 30. Here the user can write again to test the DU’s response. If the response is satisfactory the user must select the “Ok” to accept the new calibration.

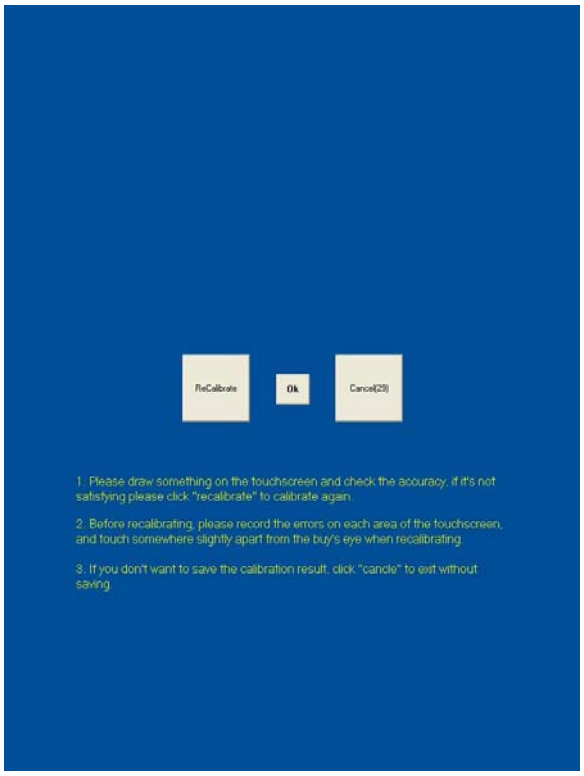

Figure 30. On-Screen Display Test

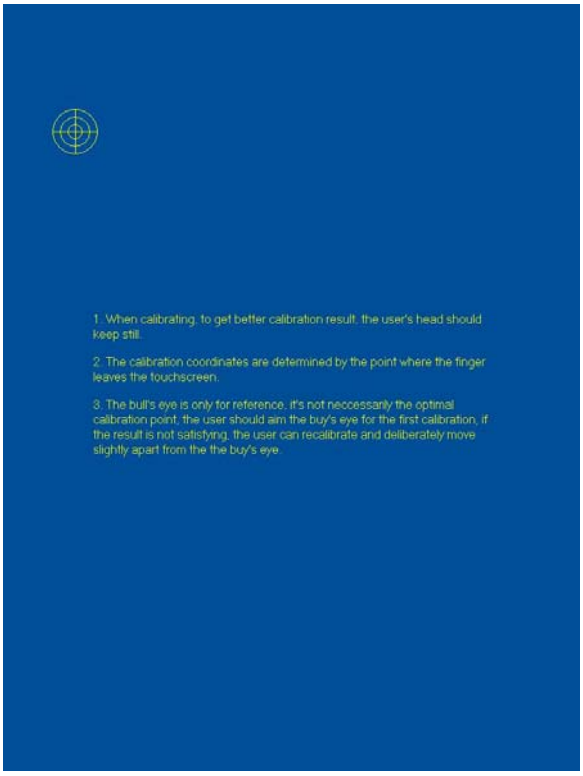

Figure 31. On-Screen Recalibration

5.0 Post-Installation Check Out

The functionality and connectivity of the L-3 CrewMate 840 EFB can be checked by powering up the DU and accessing the Status screen. The Status screen, shown in Figure 32, displays (in order from top to bottom):

1) WiFi Module: If WiFi connectivity is Activated or De-Activated.
2) Aircraft Interface Unit: If the DU has a connection to the AIU.
3) Main Fan Status: If the Main Fan is currently Active or Inactive.
4) CPU Temperature: The current temperature, in Celsius, of the DU's CPU.
5) CPU Usage:
6) Available Memory:
7) Video Capture:
8) USB Serial Ports:
9) Total Elapsed Time:

The Status screen also shows the DU's software versions of the Main Program (GUI Interface), ARINC Interface, Video Interface and Keypad Interface. The WiFi Module status is shown in blue when active. Aircraft Interface Unit and Main Fan status are shown in green when active.

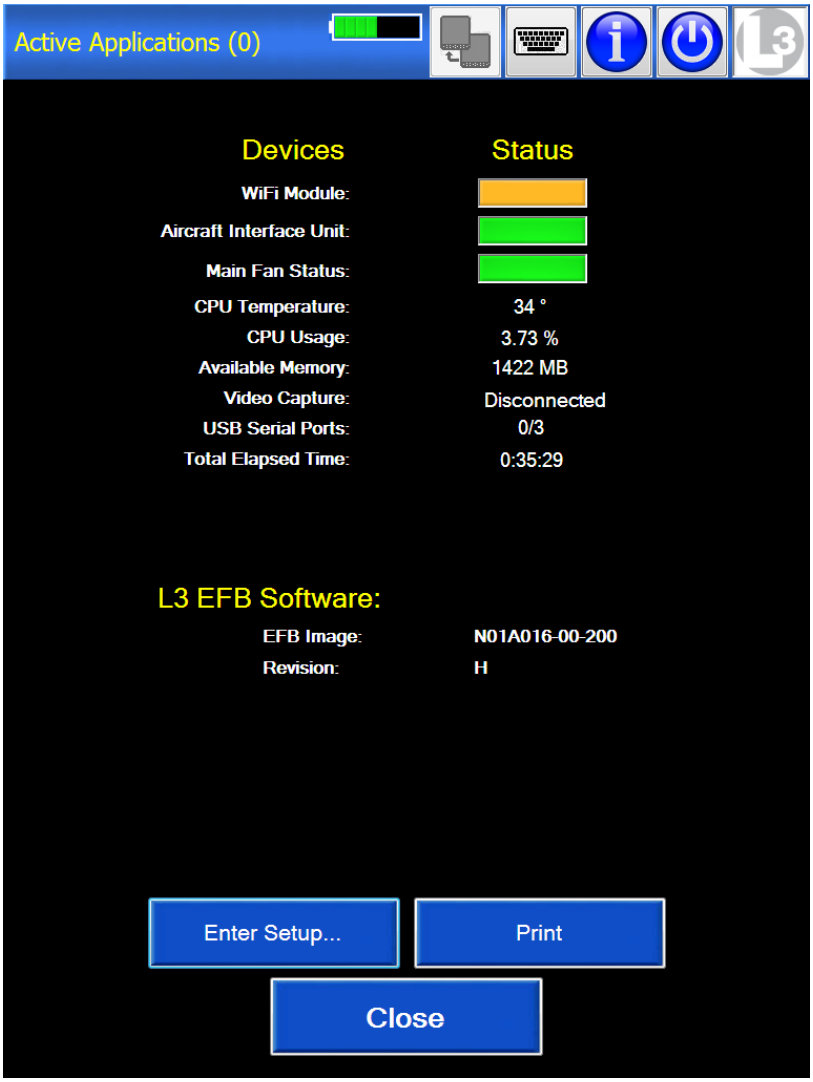

Figure 32. DU Status Display

NOTE: The DU should be fully charged before it is powered up for the first time. This can be accomplished by allowing the DU to charge uninterrupted for one hour.

5.1 EFB Error Messages

Listed below are some potential EFB error messages and their causes. “Startup/Status” messages occur while the DU is in the process of booting up or immediately after the boot up process has completed. “Configuration” messages occur when modifications are being made in the Configuration editor. “Operation” messages occur while the DU is being used.

Startup/Status

Message: *Could not open EFB.ini. Use the Setup page to create one.*
Cause: Occurs when EFB.ini cannot be found. Its default location is C:\Program Files\L3 Communications\EFB Main GUI

Message: *There was an error opening the Crosstalk port. Please verify your settings and the AIU connection.*
Cause: Occurs when Crosstalk is enabled in the Configuration page but the DU is not attached to the AIU.

Message: *Unable to communicate with Jida CPU.*
Message: *Could not initialize Jida dll.*
Message: *Unable to read AIU status.*
Message: *There was a problem reading the ETI device.*
Cause: The EFB software continually communicates to an internal card named “Jida.” Through this interface the EFB communicates with the AIU, the front bezel, and the CPU. These errors occur when there is a problem with the internal Jida card. If you see any of these error messages, please contact Support.

Configuration

Message: *No item selected.*

***Message**: Only application buttons can be moved.*
***Message**: This will Delete all of the buttons contained in the Submenu. Proceed?*
***Message**: Please select the start of the menu to remove a Submenu."*
***Message**: Selected Item is not a SUBMENU*
***Message**: Selected Item is not an application button.*
***Message**: This is not a flight related application. Proceed?*
Cause: These errors occur when using the Configuration editor and their cause depend on the interactions the user is performing in the Configuration editor.

Operation

***Message**: An error has occurred while launching the application,\ncheck your path and/or arguments.*
Cause: Occurs if the path to an application is entered incorrectly or the application has been moved or deleted.

***Message**: Battery power is very low. Would you like to close EFB?*
Cause: Occurs when the battery power reaches less than 10%, EFB prompts to close open applications and shut the DU down.

***Message**: Applications are open that EFB has launched. Would you like to close them?*
Cause: Occurs when the EFB GUI is shutting down, whether through the "Exit to Windows" button or because of low power, and there are applications open that the EFB software has launched. The user is prompted to let the software close them automatically.

***Message**: WARNING: Aircraft Interface Unit is now disconnected.*
Cause: Occurs when the DU was plugged into the AIU and then disconnected.

5.2 ARINC 429 Interface

The Electronic Flight Bag communicates with the aircraft via a high-speed ARINC 429 interface. The ARINC Handler parses ARINC data and generates four different NMEA-183 sentences: GGA (Global positioning), RMC (recommended minimum GPS/transit data), GLL (geographic position – latitude & longitude) and VTG (ground speed).

The ARINC Handler uses a COM port to communicate with the AIU and creates two COM ports for applications to use. The AIU port defaults to COM 2, but can be changed by the user via the ARINC Handler setup screen. The COM ports established by the ARINC handler are also settable by the user.

Table 4. List of A429 Supported Labels

Label: (101) – HDOP
Label: (130) – Horizontal Integrity Limit
Label: (147) – Map Center Magnetic Variation
Label: (150) – Greenwich Mean Time
Label: (203) – Altitude (29.92)
Label: (204) – Baro–Corrected Altitude
Label: (260) – Date
Label: (272) – Weight on Wheels
Label: (310) – Position – Latitude
Label: (311) – Position – Longitude
Label: (312) – Ground Speed
Label: (313) – Track Angle
Label: (314) – True Heading
Label: (320) – Magnetic Heading
Label: (361) – Origin Airport ID (Word 1)
Label: (362) – Origin Airport ID (Word 2)
Label: (365) – Destination Airport ID (Word 1)
Label: (366) – Destination Airport ID (Word 2)

5.3 ARINC 429 Validation

(1) Access the Setup Menu via the Setup icon button at the top of the main menu.

(2) A password prompt will appear before entering the Setup page. If a password was not previously established, or if the administrator forgets the password, he/she should use the test “L3DSADMIN”.

(3) Close the EFB GUI by selecting the “Exit to Windows” button. The Windows 7 desktop will appear on the DU.

(4) Double-click Tera Term icon (Figure 33) located on the desktop.

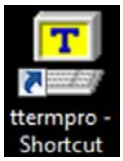

Figure 33. Tera Term Desktop Icon

(5) When Tera Term opens the New Connection dialog box should automatically open. Select Serial and COM8 port. This is the ARINC Handler output port.

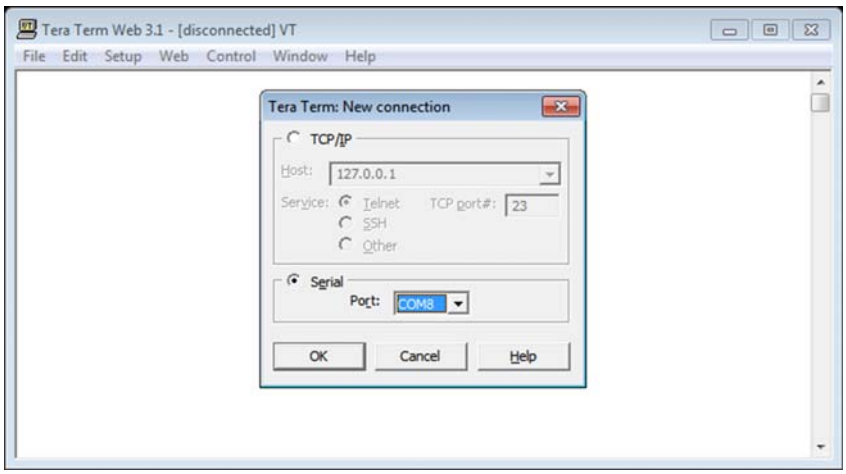

Figure 34. Tera Term New Connection Window

(6) After the connection is made, the NMEA string will appear as show in Figure 35.

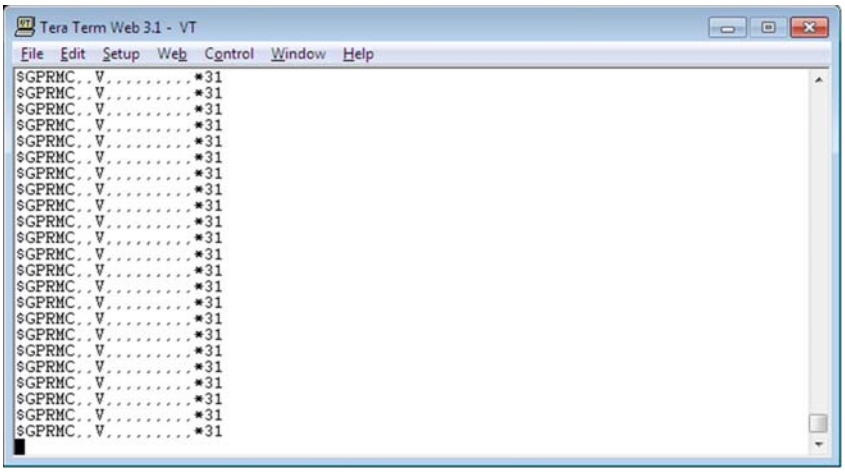

Figure 35. Tera Term New Connection Window

(7) Once ARINC 429 labels 150 (Ref 1), 310 (Ref 2,3,4), 311 (Ref 5,6), 312 (Ref 7,8), 260 (Ref 9) and 147 (Ref 10,11) are transmitted to the AIU with valid SSM's, data will appear between the commas of the NMEA string according to Table 5.

Table 5. A429 Label Format

The NMEA 0183 "$GPRMC" format will be displayed on the hyperterminal session as follows: hhmmss.ss,A,llll.ll,a,yyyyy.yy,a,x.x,x.x,xxxxxx,x.x,a,a*hh		
REF	**$GPRMC**	**DEFINITION**
1	hhmmss.ss	UTC Time
2	A	Data Status (A=Valid Position, V=Navigation Receiver Warning)
3	llll.ll	A/C Latitude
4	a	N or S of Latitude
5	yyyyy.yy	A/C Longitude
6	a	E or W of Longitude
7	x.x	Ground Speed in Knots
8	x.x	Track Made Good in Degrees
9	ddmmyy	UTC Date
10	x.x	Magnetic Variation Degrees
11	a	E or W of Magnetic Variation
12	m*hh	Mode Indicator (A=Autonomous, D=Differential, E=Estimated, N=Data Not Valid)

THIS PAGE IS INTENTIONALLY LEFT BLANK

Maintenance

6.0 Reliability

The EFB exceeds the following Mean Time Between Failure requirements:

Display Unit	15,000 hrs minimum
Aircraft Interface Unit	15,000 hrs minimum

6.1 Maintainability

The EFB meets the following maintainability requirements:

Modular design
Easy installation
No disassembly to access another LRU
System components designated LRUs
Ease of maintenance is a design goal.

7.0 Scheduled Maintenance and Calibration

The EFB does not require scheduled maintenance or calibration. The DU battery requires periodic testing and inspection as detailed in Section 7.3.

7.1 DU Screen Cleaning

The glass screen of the DU can be cleaned with any household glass cleaner and a lint free cloth. A small amount of the glass cleaner should be applied to the lint cloth before the cloth is used to clean the screen. Glass cleaner should not be sprayed directly on to the DU.

7.2 Li–Ion Battery Particulars

The DU contains one Li-Ion battery as an internal power supply. This battery is charged through the DU when the DU is placed in the Docking Station. The DU can also be charged through the supplied A/C Adapter. The battery will act as a secondary power source insuring that the DU remains operational if aircraft power is intermittent. Power is supplied to the Docking Station through the AIU.

The Li-Ion battery contains three polymer cells (Kokam p/n SLPB5043128H3). This battery is not field repairable and should not be opened under any circumstances. Altering the battery can result in damage to both the battery as well as the DU. Replacement Li-Ion batteries should only be obtained through L-3 Aviation Recorders to insure compatibility.

The Li-Ion battery used in the DU has been tested to DO-311 standards.

In situations where the Display Unit battery is removed, the DU can be used in the Docking Station or with the A/C adapter. In these situations extreme care should be taken that the DU is completely shut down before undocking or removing from A/C power.

7.3 Battery Electrical Check

FAA requires that the Display Unit Li-Ion battery be routinely checked every 15 months for proper operation and battery life. Please perform the steps detailed below to accomplish this.

7.3.1 Battery Electrical Check

Before performing the battery check the Display Unit battery should be fully charged. This can be accomplished by charging the DU through the AC adapter for at least three hours. During this time the DU should be powered off. If the DU is powered on during the AC adapter charge then at least six hours should be given for this charging process.

(1) The DU should be removed from the docking station before being turned on. In addition the DU should not be plugged into the AC Adapter.

(2) Turn on DU under battery power.

(3) While operating only on battery power the DU should be used in a manner consistent with its typical operation. To insure the integrity of the test no abnormal operations (disk defragmentation, virus scanning, copying of large files, etc.) should be done at this time. All applications except for the L-3 EFB GIU should be closed.

(4) The increase brightness bezel button should be pressed until full DU brightness is exhibited.

(5) The DU should then provide at least twenty minutes of operation without any low battery warnings or automatic forced shut downs. A forced shut down occurs when the stored voltage of the DU battery becomes so low that the operating system institutes a mandatory stand−by or inert mode to preserve data integrity.

(6) If the DU should fail this twenty minute battery test then the battery should be replaced. Please contact Product Support for additional instructions regarding shipping and replacing of the failing battery.

If the DU battery should fail the Display Unit can still be used through the docking station or AC adapter. In these situations extreme care should be taken that the DU is fully shut down before it is removed from the docking station or AC adapter.

7.3.2 Battery Physical Check

As part of the routine 15 month check, the physical integrity of the Li-Ion battery should also be inspected. The Li-Ion battery should be free from swelling and corrosion.

Before performing this procedure the DU should be shut down from the User Interface. The DU should also be disconnected from both the docking station as well as the AC Adapter.

(1) Remove 4 Philips−head screws from battery lid on rear housing.

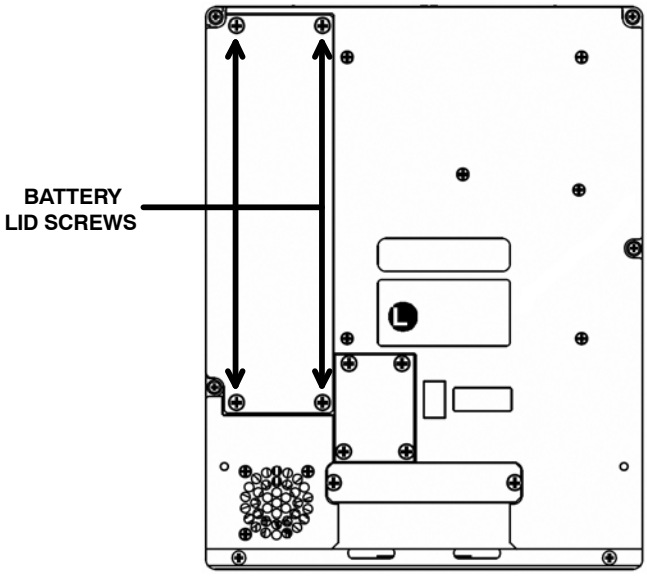

Figure 36. DU Battery Access

(2) Inspect the battery pack for any signs of swelling. If the battery pack appears to be swollen continue with this procedure. If the battery appears normal go to Step (11).

(3) Remove and replace battery back from housing cavity by disconnecting the cable at the white connector. Refer to Figure 36. The DU battery pack, P/N 63516SOCNN01A100−18−101 (L3AR P/N 011-E4860-00) is a field-serviceable item.

<u>Note</u>: If a new battery is not available then the Display Unit can be operated normally in the docking station or with the AC Adapter.

(4) Insert new battery pack by aligning the tab of the white connector to the mating connector in the cavity.

(5) Ensure a firm connection of the battery cable and secure placement of the battery in the housing cavity.

(6) Replace battery lid onto the housing and ensure it seats properly.

(7) Reinsert the 4 Philips−head screws and secure the battery lid to the housing.

(8) Press the power button to ensure the unit will power on with the battery.

(9) If the unit does not power on, place the unit onto the docking station, power on and verify the battery is charging. It may be the case that the battery has discharged while in storage.

(10) Dispose of the old battery following local policy for discarding batteries.

If a new battery pack is not available perform the following steps:

(11) Re−insert the 4 Philips-head screws and secure the battery lid to the housing.

(12) Place the unit onto the docking station, power on and verify the proper operation of the DU.

Note: In these situations extreme care should be taken that the DU is fully shut down before it is removed from the docking station or AC adapter.

7.4 Battery Replacement

The DU battery pack (p/n 011-E4860-00) is a field−serviceable item that can be removed and replaced using the instructions detailed below. Please contact L-3 Product Support before shipping any batteries back to the factory.

(1) If necessary, remove Display Unit (DU) from docking station.

(2) Remove 4 Philips−head screws from battery lid on rear housing.

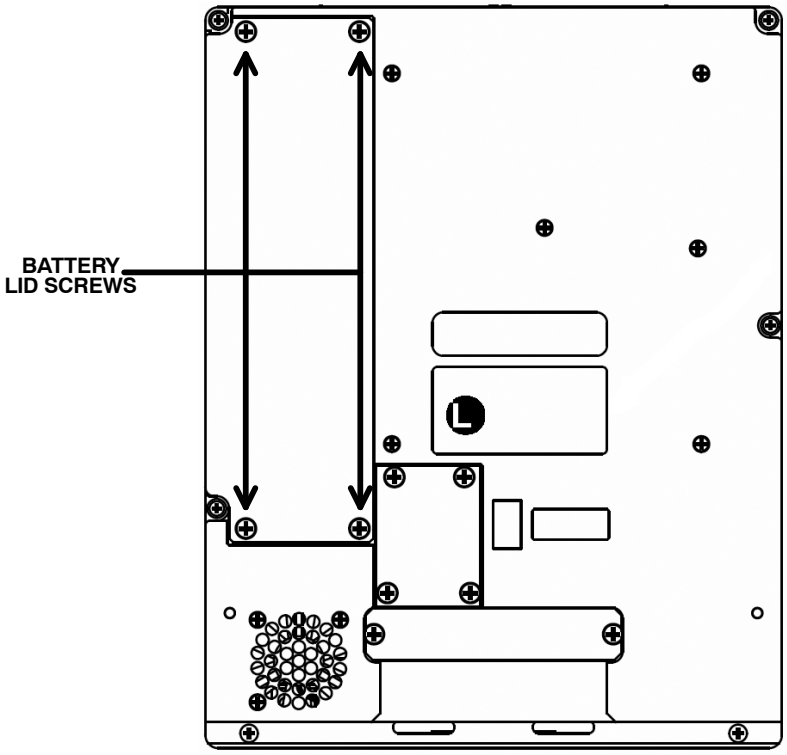

Figure 37. DU Battery Access

(3) Remove battery back from housing cavity by disconnecting the cable at the white connector.

(4) Insert new battery pack, (part number 011-E4860-00), by aligning the tab of the white connector to the mating connector in the cavity.

(5) Ensure a firm connection of the battery cable and secure placement of the battery in the housing cavity.

(6) Replace battery lid onto the housing and ensure it seats properly.

(7) Re−insert the 4 Philips−head screws and secure the battery lid to the housing.

(8) Press the power button to ensure the unit will power on with the battery.

(9) If the unit does not power on, place the unit onto the docking station, power on and verify the battery is charging. It may be the case that the battery has discharged while in storage.

7.5 Coin Battery Replacement

When the coin battery reaches the end of its service life, the date will come up as the default for that version of the bios (ie. June 2007). When the unit detects that date, the BIOS prompts the user to “Check date and time settings.” This will occur on every subsequent power on until the coin battery is replaced.

To replace the coin battery, remove the rechargeable battery pack, held by 3 captive screws on back of DU, to access the coin battery socket. Replace with a CR2032 button cell battery.

With the next subsequent power on, the BIOS will again prompt the user to “Check data and time settings” but will no longer do this once the correct date is entered and a new coin battery is in place.

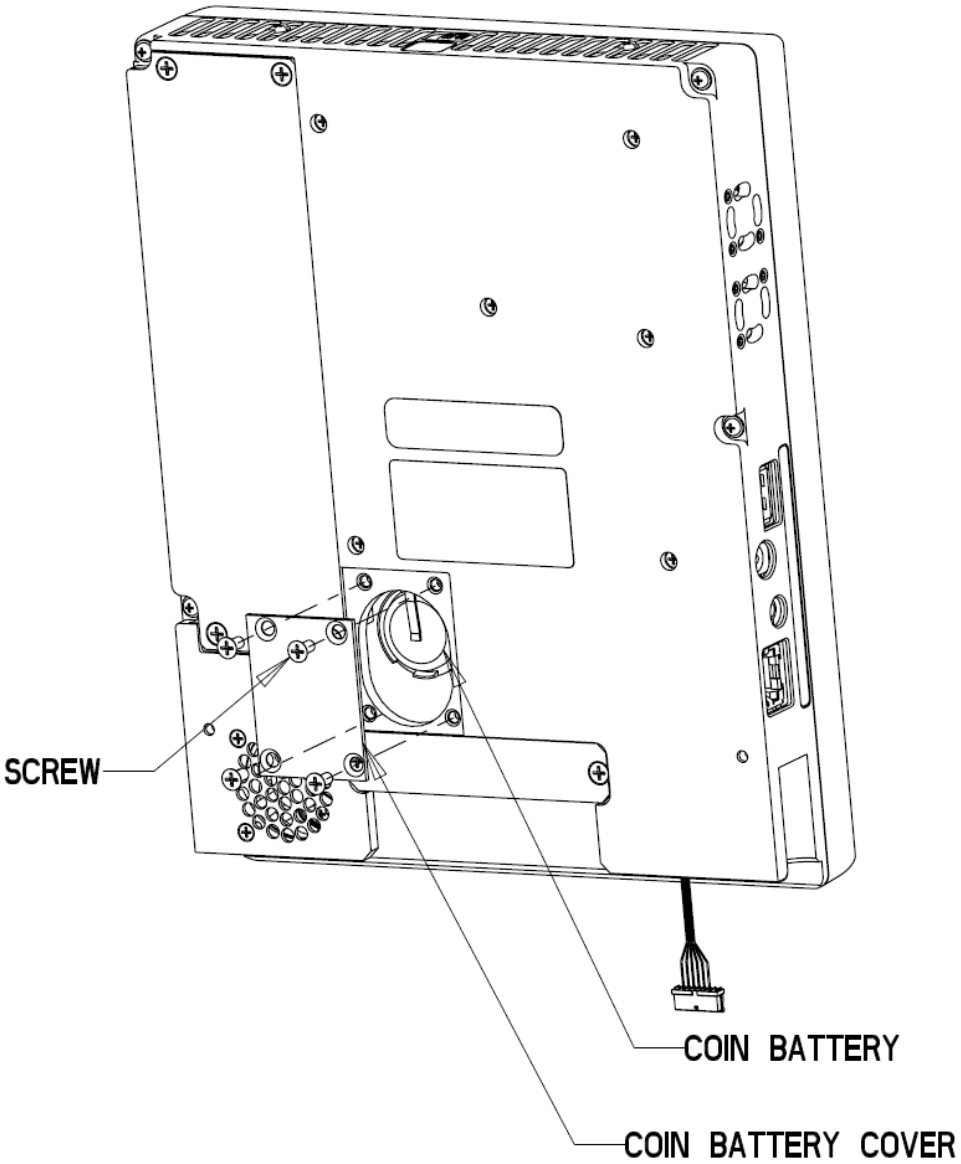

Figure 38. Coin Battery Replacement

7.6 Product Support

Mailing/Contact Information:

L–3 Communications	Telephone:	(941) 371–0811
Aviation Recorders	Telefax:	(941) 377–5591
P.O. Box 3041	SITA:	SRQLFCR
Sarasota, Florida 34230-3041	Web Site:	www.L-3ar.com
Attention: Product Support, Mail Stop 20		

7.7 Authorized Repair Facilities

Aviation Recorders performs repair services for the CrewMate EFB. Items needing repair should be shipped to the following address:

L-3 Communications
Aviation Recorders
100 Cattlemen Road
Sarasota, Florida 34232
Attention: Repair Station

Questions concerning the CrewMate EFB component repair may be answered by calling the Aviation Recorders' Repair Station or the Product Support Department at (941) 371-0811.

THIS PAGE IS INTENTIONALLY LEFT BLANK

Aircraft Interface Unit Characteristics

Maximum Dimensions

Height: 2.62” maximum
Width: 6.0” maximum
Length: 9.0” maximum
Dimensions do not include connectors

Weight

2.4 lbs (excludes weather receiver module)

Enclosure

Material to meet environment
Mounting locations reinforced for crash safety
Mounting points to accommodate fixed mounting.

Power Input

28 VDC aircraft power per MIL-STD-704E for normal, abnormal emergency & starting conditions.
70 Watts nominal
Over / Under / Reverse Voltage protection

External Connectors

Maximum protrusion from case: 7mm (~0.27”)
Connectors labeled for easy identification.
J1 – Main Connector
- Power
- ARINC 429 (Receive only)
- RS-232, spare
- MIL-C-26482/insert 16-26

J2 – High Speed Connector
- Ethernet
- RS-422 (AIU-AIU (DU Cross Talk))
- MIL-C-26482/insert 14-19

J3 – DU interconnect
- 15 pin Micro-mini D-sub

J4 – Video
- BNC (1.0 V pk-pk NTSC/RS-170A composite)

Docking Assembly Characteristics

Orientation

Portrait or Landscape

Interface

Integral mechanical and electrical
Mates with installation assembly (blind mate)

Display Unit Characteristics

Maximum Dimensions

Height: 8.5”
Width: 6.6”
Depth: 1.75”

Weight

4.0 lbs maximum (excluding Docking mechanism)

Power Input

15Vdc (from AIU or external 115/230 VAC charger)
60 Watts max
Over / Under Voltage protection

Battery

1.0 hour minimum charge (normal usage)
Operates while charging
Replaceable without special tools or disassembly

Enclosure

Mounting locations reinforced for crash safety
Docking assembly for mounting to the vehicle or installation assembly.
Aluminum chassis
Plastic bezel in accordance with FAA flammability requirements

Color

Case and bezel color black

Indicators

Power ON/OFF
Wireless ON/OFF

Orientation

Portrait and landscape.

Interchangeability

Interchangeable left seat to right seat.

External Connectors

AIU / DU: Part of docking assembly.
USB type A x 2: Located in DU bezel.
Ethernet: RJ-45 Located in DU bezel
Audio: Stereo mini phone jack (3.5mm)
External power in (hotel kit)

Operator Controls

Touch Screen / On Screen Display
On/Off bezel switch
Back light / Bezel luminance Up / Down.
Main Menu bezel switch
Exit bezel switch
Up/Down, Left/Right, Enter bezel switches
Page Up, Page Down bezel switches
Landscape/Portrait bezel switch
Zoom In / Zoom Out bezel switches
Crosstalk selection (on screen button)
Wireless ON/OFF switch
Illuminated and dimmable bezel switches

Display Unit Touch Screen Characteristics

Type
Infrared technology
Overlay
Glass safety cover
Anti-reflective
Coatings survive repeated use.
Operation
Works with gloves, bare fingers, and pointing devices
Positional Accuracy
=3.8mm (0.150”)
Touch Screen Interface
Internal to DU.
User Controls
Calibration controls provided to configure the touch screen. Calibration application resides on DU.

Display Unit Processing Characteristics

Processor
Pentium M 1.8 GHz internal, 400MHz front side bus
Non Volatile Memory
32GB or 64GB solid state Flash memory (as available)
Start Up
< 1 minute to full operation
Sleep Mode
Unit extinguishes the back light and ‘hibernates’ to minimize heat generation
Loading
Provides means for loading, maintaining, and updating applications and databases
Filter
Provides mechanism to limit installation and use of non-flight related applications

Display Unit LCD Characteristics

Diagonal Size
213mm (8.4”)
Resolution
XGA 1024 x 768 in portrait and landscape
Display Type
AMLCD with touch screen
Color Depth
6-bit color (65K colors)
Contrast Ratio
On-Axis >400:1 at max. brightness
>250:1 at low ambient lighting within viewing envelope
>8:1 for white with 8000 fc diffuse and 2000 fL specular ambient illumination within viewing envelope
Time Based Effects
No noticeable effects due to flicker, scintillation, or jitter within the viewing envelope
Viewing Cone
Minimum viewing cone ±80ºH , ±80ºV, in portrait with face plate / bezel installed
No gray scale inversion within viewing cone
No color shift within viewing cone
Viewability
SAE-AIR 1151 (Sections 5.2 and 5.5) ‘Flight compartment glare’ recommendations.
Design
Complies with SAE ARP 4256 ‘Design Objectives for Liquid Crystal Displays’
Performance
Complies with SAE AS 8034A ‘Minimum Performance Standard for Airborne Multi Purpose Electronic Displays’

Display Unit Backlight Characteristics

Maximum Luminance
On axis (0.0ºH x 0.0ºV):
>900 Nits (292 FL)
Off axis (+22.5ºH x 22.5ºV and −22.5ºH x 22.5ºV):
>800 Nits (234 FL)
Measured with touch screen and anti-glare filters in place.
Minimum Luminance
<1 Nit (0.3 FL).
Measured with touch screen and anti-glare filters in place.
Flicker
Not noticeable to a standard viewer down to the minimum luminance.
Dimming
Adjustable in fine increments or continuously
Equal apparent brightness between steps
Display not OFF at the lowest dim level
Does not impact night flight deck operations at lowest brightness setting
Luminance non-uniformity
=30% from minimum to maximum brightness
Startup Time
Over 20ºC to 70ºC temperature range, 1 minute at 50% brightness, 5 minutes at full brightness
Over −30ºC to 20ºC temperature range, 5 minutes at 50% brightness, 10 minutes at full brightness

Applications

The L-3 CrewMate 840 EFB is capable of hosting multiple applications compatible with the Windows® 7 operating system.

Note: The applications installed on the EFB are selected by the end user. The end user shall be responsible for acquisition costs of the application software products/tools, and any related subscription services associated with use of and/or updates to the application software products/tools.

Applications and data can be loaded via an external USB 2.0 compatible CD-ROM drives and/or memory sticks. Software drivers need to be Windows 7 compatible. External equipment can be connected via the USB ports. Alternatively, the applications and data can be loaded via Ethernet or wireless connections. The following are examples of applications and data that could be hosted on the CrewMate DU:

The following CD-ROM and DVD drives have been tested to be compatible with the L-3 CrewMate 840 EFB: Comstar DVR-S111B, Memorex Ultraspeed CD-R and LG GSA-E60N CD/DVD.

The following list is an example of some of the applications that can be run on the L-3 CrewMate 840 EFB:

- JeppView Electronic Charting
- JetPlanner (Jeppesen)
- NavSuite (Jeppesen)
- Onboard Performance Tool (Jeppesen)
- Jeppesen Electronic Charts
- Jeppesen e-Link Online
- Electronic Documents (Jeppesen)
- Airport Moving Map (Jeppesen)
- Electronic Route Manual (NavTech/EAG)
- MS Office (word processing, spreadsheet, etc)
- Document/Chart Viewer
- Document/Chart printer (color)
- Moving Map
- Cabin Surveillance
- Weather receiver
- Performance calculator
- Web Browser
- Email
- Interactive Logbooks w/ automatic flight time recording
- Weight and Balance calculator
- AntiVirus
- TCP/IP video streaming from cabin systems
- Crosstalk (DU to DU)

The following list is an example of some of the data applications that can be run on the L-3 CrewMate 840 EFB:

- Route Weather
- Electronic Charts and Maps
- Lido database
- Navtec/EAG database
- Jeppesen database
- Flight Planning Operations Specifications (OpSpecs)
- Flight Logs
- Airport Moving Map
- Aircraft Maintenance Logs
- Aircraft Flight Manual
- Checklists
- EMS Reference Libraryand Navigation Charts (Jeppeson)
- Minimum Equipment List (MEL)
- General Operations Manual (GOM)

THIS PAGE IS INTENTIONALLY LEFT BLANK

Reference Documents

The documents referenced herein apply to the extent they are referenced in the text. In those cases where specific paragraphs are referenced, only those paragraphs apply. If specific paragraphs are not referenced, the document applies in its entirety.

8.0 FAA Documents

AC 120-76A	Advisory Circular -Guidelines for the Certification, Airworthiness, & Operational Approval of Electronic Flight Bag Computing Devices (March 17, 2003)
AC 25-11 (AC 25-11-1X draft)	Advisory Circular-Transport Category Airplane Electronic Display Systems (July 16, 1987)
AC 91-78	Advisory Circular-Use of Class 1 or Class 2 Electronic Flight Bag (EFB)
AC 91.21-1	Advisory Circular-Use of Portable Electronic Devices Aboard Aircraft
OpSpec A025	Guidelines for the Certification, Airworthiness, & Operational Approval of Electronic Flight Bag Computing Devices
DOT-VNTSC-FAA-03-07	EFB Job Aid, Human Factors Considerations in the Design & Evaluation of Electronic Flight Bags (EFBs) Version 2. USDOT Volpe.
Notice N 8200.98	EFB Job Aid, Electronic Flight Bag (EFB) Operational Evaluation & Approval version 2.0, Sept 2006.

8.1 JAA Documents

TGL-36	Approval of Electronic Flight Bags

8.2 Military Documents

MIL-HDBK-217	Reliability Production of Electronic Equipment
MIL-STD-704E	Aircraft Electrical Power Characteristics

8.3 Transport Canada Documents

PI 500-017	Certification of Electronic Flight Bags (EFBs)

8.4 Non-Government Documents

RTCA DO-160	Environmental Conditions & Test Procedures for Airborne Equipment
SAE AIR 1151	Flight Compartment Glare (sections 5.2 & 5.5)
SAE AS 3034	Minimum Performance Standard for Airborne Multi Purpose Electronic Display
SAE ARP 4260	Photometric & Colorimetric Measurement Procedures for Airborne Flat Panel Displays
SAE ARP 4256	Design Objectives for Liquid Crystal Displays
SAE ARP 4102	Flight Deck Panels Controls & Displays (sections 3 & 7)
SAE ARP 4032	Human Engineering Considerations in the Application of Colour to Electronic Aircraft Displays
SAE ARP 1870	Aerospace Systems Electrical Bonding & Grounding for Electromagnetic Compatibility SAE ARP 4102y & Safety
SAE ARP 4404	Aircraft Electrical Installations
ARINC 429	Mark 33 Digital Interface Transfer System
ARINC 664	Aircraft Data Network, Part 7 - Avionics Full Duplex Switched Ethernet (AFDX) Network
ARINC 708	Airborne Weather Radar, 1978 (Includes Supplements 1 Through 6)
ARINC 717	Flight Acquisition & Recording System
ARINC 828 (draft)	Electronic Flight Bag (EFB) Standard Interface
TIA-232-F	Interface Between Data Terminal Equipment & Data Circuit-Terminating Equipment Employing Serial Binary Data Interchange
ANSI/TIA/EIA-422-B	Electrical Characteristics of Balanced Voltage Differential Interface Circuits
ANSI/TIA/EIA-485-A-98 (R2003)	Electrical Characteristics of Generators & Receivers for Use in Balanced Digital Multipoint Systems
DVI	Specification “Digital Visual Interface” DVI, Rev. 1.0, April 1999
USB	Universal Serial Bus (USB) Revision 2.0, Jul 16 2007
ANSI/TIA/EIA-644-A	Low Voltage Differential Signaling LVDS
RS-170A/NTSC Video	Television - Composite Analog Video Signal - NTSC for Studio Applications

THIS PAGE IS INTENTIONALLY LEFT BLANK

Hardware Durability and Reliability

The CrewMate EFB maximizes use of COTS hardware that is packaged for operation within the cockpit of commercial and General Aviation aircraft. The EFB meets the following design levels:

Test Environment	DO-160E Test Section	Category
Temperature Ground Survival Low Temperature (-55¿C) Short Time Operating Low Temperature (-40¿C) Operating Low Temperature (-15¿C) Ground Survival High Temperature (+85¿C) Short Time Operating Temperature (+70¿C) Operating High Temperature (+55¿C)	Section 4.5	 Category A2 Category A2 Category A2 Category A2 Category A2 Category A1
Altitude Operating Altitude (15,000 ft) Rapid Decompression 50,000 to 8000 ft) Over Pressure (-15,000 ft)	Section 4.6	Category A2
Temperature Variation	Section 5	Category B
Humidity	Section 6	Category A
Shock, Operational and Crash Safety	Section 7	Category B
Vibration (curve B)	Section 8	Category S
Explosion Proofness	Section 9	Category E

RTCA/ DO−160E PROCED-URE	ENVIRONMENT	LIMITS
Section 15	Magnetic Effects	Cat Z
Section 16	Power Input	Cat A
Section 17	Voltage Spikes	Cat A
Section 18	Audio Frequency Conducted Susceptibility	Cat Z
Section 19	Induced Signal Susceptibility	Cat ZC
Section 20	RF Susceptibility	Cat T
Section 21	RF Emissions	Cat M Modified for proximity to glide slope antenna
Section 22	Lightning Induced Transient Susceptibility	Cat A2E2
Section 23	Lightning Direct Effects	Cat X
Section 25	Electrostatic Discharge	Cat A

Aviation Recorders

Safety Statements and Regulatory Compliance for the ClassMate 840 Electronic Flight Bag

Doc. #: 165E4860-01, 9/23/2011, Rev. –

Important Safety Information

This ClassMate 840 Electronic Flight Bag (EFB) is designed and tested to meet the latest standards for safety of information technology equipment. However, to ensure safe use of this product, it is important that the safety instructions marked on the product and in the documentation are followed.

Warning

Always follow these instructions to help guard against personal injury and damage to your EFB and associated equipment.

Installation

Read and follow all instructions marked on the product and in the documentation before you operate the EFB. Retain all safety and operating instructions for future use.

Do not use this product near water or a heat source such as a radiator.

Set up the system on a stable work surface.

The EFB should be operated only from the type of power source indicated on the rating label.

Openings in the EFB case are provided for ventilation. Do not block or cover these openings. Make sure you provide adequate space, at least 6 inches (15 cm), around the EFB for ventilation. Never insert objects of any kind into the ventilation openings.

The EFB is equipped with a three-wire power cord to make sure that the unit is properly grounded when in use. The plug on this cord will fit only into a grounding-type outlet. This is a safety feature. If you are unable to insert the plug into an outlet, contact an electrician to install the appropriate outlet.

If you use an extension cord with this system, make sure that the total ampere rating on the products plugged into the extension cord does not exceed the extension cord ampere rating.

Care During Use

Do not walk on the power cord or allow anything to rest on it.

Do not spill anything on the EFB. The best way to avoid spills is to avoid eating and drinking near the EFB.

The EFB has a replaceable CMOS battery on the system board. There is a danger of explosion if the CMOS battery is replaced incorrectly. Replace the battery with the same or equivalent type. Dispose of batteries according to the battery manufacturer's instructions.

When the EFB is turned off, a small amount of electrical current still flows through the system. To avoid electrical shock, always unplug all power cables from the wall outlets before cleaning the system.

Unplug the EFB from the wall outlet and refer servicing to qualified personnel if:

- The power cord or plug is damaged.
- Liquid has been spilled into the system.
- The system does not operate properly when the operating instructions are followed.
- The system was dropped or the cabinet is damaged.
- The system performance changes.

Replacement Parts & Accessories

Use only replacement parts and accessories recommended by L-3 Aviation Recorders.

Important

Do not use the EFB in areas classified as hazardous locations. Such areas include patient care areas of medical and dental facilities, oxygen-laden environments, or industrial facilities.

Regulatory Compliance Statements

Wireless Guidance

Low power, Radio LAN type devices (radio frequency (RF) wireless communication devices), operating in the 2.4 GHz Band, are present (embedded) in the EFB. The following section is a general overview of considerations while operating a wireless device.

Additional limitations, cautions, and concerns for specific countries are listed in the specific country sections (or country group sections). The wireless devices in your system are only qualified for use in the countries identified by the Radio Approval Marks on the system rating label. If the country you will be using the wireless device in, is not listed, please contact your local Radio Approval agency for requirements. Wireless devices are closely regulated and use may not be allowed.

The power output of the wireless device or devices that may be embedded in your notebook is well below the RF exposure limits as known at this time. Because the wireless devices (which may be embedded into your notebook) emit less energy than is allowed in radio frequency safety standards and recommendations, L-3 Aviation Recorders believes these devices are safe for use. Regardless of the power levels, care should be taken to minimize human contact during normal operation.

As a general guideline, a separation of 20 cm (8 inches) between the wireless device and the body, for use of a wireless device near the body (this does not include extremities) is typical. This device should be used more than 20 cm (8 inches) from the body when wireless devices are on and transmitting.

Some circumstances require restrictions on wireless devices. Examples of common restrictions are listed below:

- **Warning**
  Radio frequency wireless communication can interfere with equipment on commercial aircraft. Current aviation regulations require wireless devices to be turned off while traveling in an airplane. 802.11B (also known as wireless Ethernet or Wifi) and Bluetooth communication devices are examples of devices that provide wireless communication.
- **Warning**
  In environments where the risk of interference to other devices or services is harmful or perceived as harmful, the option to use a wireless device may be restricted or eliminated. Airports, Hospitals, and Oxygen or flammable gas laden atmospheres are limited examples where use of wireless devices may be restricted or eliminated. When in environments where you are uncertain of the sanction to use wireless devices, ask the applicable authority for authorization prior to use or turning on the wireless device.
- **Warning**
  Every country has different restrictions on the use of wireless devices. Since your system is equipped with a wireless device, when traveling between countries with your system, check with the local Radio Approval authorities prior to any move or trip for any restrictions on the use of a wireless device in the destination country.
- **Warning**
  The EFB comes equipped with an internal embedded wireless device, do not operate the wireless device unless all covers and shields are in place and the system is fully assembled.
- **Warning**
  Wireless devices are not user serviceable. Do not modify them in any way. Modification

to a wireless device will void the authorization to use it. Please contact L-3 Aviation Recorders for service.

- **Warning**
  Only use drivers approved for the country in which the device will be used. Contact L-3 Aviation Recorders Technical Support for additional information.

United States of America

Federal Communications Commission (FCC)
Intentional emitter per FCC Part 15

Low power, Radio LAN type devices (radio frequency (RF) wireless communication devices), operating in the 2.4 GHz Band, are present (embedded) in this EFB.

Wireless devices that in the EFB are only qualified for use in the United States of America if an FCC ID number is on the system label.

The FCC has set a general guideline of 20 cm (8 inches) separation between the device and the body, for use of a wireless device near the body (this does not include extremities). This device should be used more than 20 cm (8 inches) from the body when wireless devices are on. The power output of the wireless device (or devices), which are embedded in the EFB, is well below the RF exposure limits as set by the FCC.

Operation of this device is subject to the following two conditions: (1) This device may not cause harmful interference, and (2) this device must accept any interference received, including interference that may cause undesired operation of the device.

Warning

Wireless devices are not user serviceable. Do not modify them in any way. Modification to a wireless device will void the authorization to use it. Contact L-3 Aviation Recorders for service.

Unintentional Emitter per FCC Part 15

This device has been tested and found to comply with the limits for a Class B digital device, pursuant to Part 15 of the FCC rules. These limits are designed to provide reasonable protection against harmful interference in a residential installation. This equipment generates, uses, and can radiate radio frequency energy and, if not installed and used in accordance with the instructions, may cause harmful interference to radio or television reception. However, there is no guarantee that interference will not occur in a particular installation. If this equipment does

cause interference to radio and television reception, which can be determined by turning the equipment off and on, the user is encouraged to try to correct the interference by one or more of the following measures:

- Reorient or relocate the receiving antenna
- Increase the separation between the equipment and receiver
- Connect the equipment into an outlet on a circuit different from that to which the receiver is connected
- Consult the dealer or an experienced radio/TV technician for help.

FCC Declaration of Conformity

- Responsible party:
  L-3 Aviation Recorders
  100 Cattlemen Road
  Sarasota, FL 34232
  (941) 371-0811

Product:

- ClassMate 840 Electronic Flight Bag (EFB)
  This device complies with Part 15 of the FCC Rules. Operation of this product is subject to the following two conditions: (1) this device may not cause harmful interference, and (2) this device must accept any interference received, including interference that may cause undesired operation.

Caution

Changes or modifications not expressly approved by L-3 Aviation Recorders could void the FCC compliance and negate your authority to operate the product.

Canada

Industry Canada (IC)
Intentional emitter per RSS 210

Low power, Radio LAN type devices (radio frequency (RF) wireless communication devices), operating in the 2.4 GHz Band, are present (embedded) in the EFB.

Wireless devices that may be in your system are only qualified for use in Canada if an Industry Canada ID number is on the system label.

As a general guideline, a separation of 20 cm (8 inches) between the wireless device and the body, for use of a wireless device near the body (this does not include extremities) is typical. This device should be used more than 20 cm (8 inches) from the body when wireless devices are on. The power output of the wireless device (or devices), which may be embedded in your notebook, is well below the RF exposure limits as set by Industry Canada.

Operation of this device is subject to the following two conditions: (1) This device may not cause harmful interference, and (2) this device must accept any interference received, including interference that may cause undesired operation of the device.

Warning

To prevent radio interference to licensed service, this device is intended to be operated indoors and away from windows to provide maximum shielding. Equipment (or its transmit antenna) that is installed outdoors is subject to licensing.

Warning

Wireless devices are not user serviceable. Do not modify them in any way. Modification to a wireless device will void the authorization to use it. Contact Gateway for service.

Unintentional Emitter per ICES-003

This digital apparatus does not exceed the Class B limits for radio noise emissions from digital apparatus as set out in the radio interference regulations of Industry Canada.

Le présent appareil numérique n'émet pas de bruits radioélectriques dépassant les limites applicables aux appareils numériques de Classe B prescrites dans le règlement sur le brouillage radioélectrique édicté par Industrie Canada.

Mexico

Intentional Emitter

Low power, Radio LAN type devices (radio frequency (RF) wireless communication devices), operating in the 2.4 GHz Band, are present (embedded) in the EFB.

Wireless devices that may be in your system are only qualified for use in Mexico if a SCT ID is on the system label.

As a general guideline, a separation of 20 cm (8 inches) between the wireless device and the body, for use of a wireless device near the body (this does not include extremities) is typical. This device should be used more than 20 cm (8 inches) from the body when wireless devices are on. The power output of the wireless device (or devices), which may be embedded in your notebook, is well below the RF exposure limits as set by SCT.

Unintentional Emitter

At this time there are no mandatory requirements for Unintentional Emitters. However, this device does comply with multiple requirements for other countries and regions as listed on the system label and in the users manual.

European Union

The following information is only applicable to systems labeled with the CE mark:

European directives

This Information Technology Equipment has been tested and found to comply with the following European directives:

EMC Directive 89/336/EEC with amending directives 92/31/EEC & 93/68/EEC as per:

- EN 55022 Class B
- EN 61000-3-2
- EN 61000-3-3
- EN 55024
- Low Voltage Directive (Safety) 73/23/EEC as per EN 60950(A1/A2/A3/A4/A11)
- Radio and Telecom Terminal Equipment Directive 199/5/EC as per:
    - ETS 300 328-2
    - ETS 301 489-1
    - ETS 301 489-17

European Radio Approval Information

This Product is a Notebook computer; low power, Radio LAN type devices (radio frequency (RF) wireless communication devices), operating in the 2.4 GHz band, are present (embedded) in the EFB which is intended for home or office use.

Wireless devices that may be in your system are only qualified for use in the European Union or associated areas if a CE mark with a Notified Body Registration Number and the Alert Symbol is on the system label.

The power output of the wireless device or devices that may be embedded in the EFB is well below the RF exposure limits as set by the European Commission through the R&TTE directive.

European States Qualified Under Wireless Approvals:

- EU
  Austria, Belgium, Denmark, Finland, France (with frequency restrictions), Germany, Greece, Ireland, Italy, Luxembourg, The Netherlands, Portugal, Spain, Sweden and the United Kingdom.
- Accept EU
  Iceland, Liechtenstein, Norway and Switzerland

European States with Restrictions on Use:

- EU
  In France, the frequency range is restricted to 2446-2483.5 MHz for devices above 10 mW transmitting power such as wireless LAN.
- Accept EU
  No limitations at this time.

Japan

Wireless Devices

Low power, Radio LAN type devices (radio frequency (RF) wireless communication devices), operating in the 2.4 GHz Band, are present (embedded) in the EFB.

Wireless devices that may be in your system are only qualified for use in Japan if a TELEC ID is on the system label.

Operational Guidelines for 2.4 GHz Band Wireless Equipment

This equipment uses the 2.4 GHz ISM frequency band. The ISM band is the industrial, scientific, and medical device band. Devices that might also use this band are microwave ovens, other LAN devices, amateur radio stations, licensed premises radio stations, and non-licensed specified low-power radio stations.

Prior to Setting Up the EFB:

- Make sure that there are no other devices in your area using the same frequency band.
- Change the channel, location, or discontinue device use if you are interfering with any other radio station.
- Contact L-3 Aviation Recorders if you have any problems with this device.

VCCI Statement

This equipment is in the Class B category (Information Technology Equipment to be used in a residential area or an adjacent area thereto) and conforms to the standards set by the Voluntary Control Council for Interference by Information Technology Equipment aimed at preventing radio interference in such residential areas. When used near a radio or TV receiver, it may become the cause of radio interference. Read instructions for correct handling.

Australia and New Zealand

Wireless Devices

Low power, Radio LAN type devices (radio wave (RF) wireless communication devices), operating in the 2.4 GHz Band, are present (embedded) in the EFB.

Wireless devices that may be in your system are only qualified for use Australia and New Zealand if a C-tick mark and registration number is on the system label.

The power output of the wireless device or devices that may be embedded in your notebook is well below the RF exposure limits as set by the Australia Communications Authority (ACA) and Radio Spectrum management Group (RSMG).

EMI Statement

This device has been tested and found to comply with the limits for a Class B digital device, pursuant to the Australian/New Zealand standard AS/NZS 3548 set out by the Australian Communications Authority and the Radio Spectrum Management Agency.