SGS-CSTC Standards Technical Services Ltd.

1/F., Building No. 1 Building, Agriculture Machinery Materials Co. Wushan Road, Shipai, Tianhe District,Guangzhou, China
Telephone: +86 (0) 20 3848 1001 Fax: +86 (0) 20 3848 1006
kent_hsu@sgs.com

FEDERAL COMMUNICATIONS COMMISSION
Registration number: 282399

FCC TEST REPORT

Application No. : GLEMO040801038IT

Applicant: Intec Inc.

FCC ID: RDDG8094028080

Fundamental Carrier Frequency : 2.402GHz to 2.481GHz

Equipment Under Test (EUT):

Name: Wireless Racing Wheel

Model: G8094

Standards: FCC PART 15, SUBPART C : 2003 (Section 15.247)

Date of Receipt: 02 September 2004

Date of Test: 10 to 20 September 2004

Date of Issue: 06 October 2004

Test Result :	**PASS ***

* In the configuration tested, the EUT complied with the standards specified above.

Authorized Signature:

Kent Hsu
Laboratory Manager
SGS-CSTC Co.,Ltd.

This report refers to the General Conditions for Inspection and Testing Services, printed overleaf
This report details the results of the testing carried out on one sample. The results contained in this test report do not relate to other samples of the same product and does not permit the use of the SGS PRODUCT CERTIFICATION MARK.. The manufacturer should ensure that all products in series production are in conformity with the product sample detailed in this report.
This report may only be reproduced and distributed in full. If the product in this report is used in any configuration other than that detailed in the report, the manufacturer must ensure the new system complies with all relevant standards. Any mention of SGS International Electrical Approvals or testing done by SGS International Electrical Approvals in connection with, distribution or use of the product described in this report must be approved by SGS International Electrical Approvals in writing.

Member of the SGS Group (Société Générale de Surveillance)

2 Test Summary

Test	Test Requirement	Stanadard Paragraph	Result
Conducted Emission (150KHz to 30MHz)	FCC PART 15 :2003	Section 15.207	PASS
Radiated Emission (30MHz to 25GHz)	FCC PART 15 :2003	Section 15.209	PASS
Maximum Peak Output Power	FCC PART 15 :2003	Section 15.247 (b1)	PASS
Hopping Channel Number	FCC PART 15 :2003	Section 15.247 (b1)	PASS
Occupied Bandwidth	FCC PART 15 :2003	Section 15.247 (a1)	PASS
Carrier Frequencies Separated	FCC PART 15 :2003	Section 15.247 (a1,iii)	PASS
Band Edges Measurement	FCC PART 15 :2003	Section 15.247 (c)	PASS
Dell Time	FCC PART 15 :2003	Section 15.247 (c)	PASS
Power Spectral Density Measurement	FCC PART 15 :2003	Section 15.247 (d)	PASS

Remark:

Model No.: G8094

Model G8094 is Host Part (Transceiver) of X-box wheel.

3 Contents

Page

1 COVER PAGE **1**

2 TEST SUMMARY **2**

3 CONTENTS **3**

4 GENERAL INFORMATION **4**

4.1 CLIENT INFORMATION 4
4.2 GENERAL DESCRIPTION OF E.U.T. 4
4.3 DESCRIPTION OF SUPPORT UNITS 4
4.4 STANDARDS APPLICABLE FOR TESTING 4
4.5 TEST LOCATION 4
4.6 OTHER INFORMATION REQUESTED BY THE CUSTOMER 4
4.7 TEST FACILITY 5

5 TEST RESULTS **6**

5.1 TEST INSTRUMENTS 6
5.2 E.U.T. OPERATION 6
5.3 TEST RESULT 7
5.3.1 Conducted Emissions Mains Terminals, 150kHz to 30MHz *7*
5.3.2 Radiated Emissions *8*
5.3.3 Maximum Peak Output Power *16*
5.3.4 Hopping Channel Number *18*
5.3.5 Occupied Bandwidth & Carrier Frequencies Separated *19*
5.3.6 Band Edges Requirement *23*
5.3.7 Dwell Time *28*
5.3.8 Power Spectral Density *32*

6 TEST SETUP **33**

7 PHOTOGRAPHS - EUT CONSTRUCTIONAL DETAILS **34-36**

4 General Information

4.1 Client Information

Applicant Name: Intec Inc.
Applicant Address: 5255NW 159th Street Miami,Fl 33014 Usa

4.2 General Description of E.U.T.

Product Name: Wireless Racing Wheel (2.4GHz)
Model: G8094 (Host Part , Transceiver)
Power Supply: Racing Wheel (Controller) : 6.0V DC (4 x 'AA' Size Batteries)
Host (Transceiver) supplied by X-box.
Power Cord: N/A-

4.3 Description of Support Units

The EUT was tested with a X-Box & a TCL 14" TV monitor.

4.4 Standards Applicable for Testing

The customer requested FCC tests for a Host Part (Transceiver) of the Wireless Racing Wheel.

The standard used was FCC PART 15, SUBPART C (2003) section 15.247.

4.5 Test Location

All tests were performed at:-

SGS-CSTC Standards Technical Services Ltd., Guangzhou Safety & EMC Laboratory, 1/F, Building No. 1, Agriculture Machinery Materials Company Warehouse Ltd., Wushan Road Shipai, Tianhe District, Guangzhou, China. P.C. 510630.

Tel: +86 20 3848 1001

Fax: +86 20 3848 1006

4.6 Other Information Requested by the Customer

None.

4.7 Test Facility

The test facility is recognized, certified, or accredited by the following organizations:

- **NVLAP – Lab Code: 200611-0**
  SGS-CSTC Standards Technical Services Co., Ltd., Guangzhou EMC Laboratory is recognized under the National Voluntary Laboratory Accreditation Program (NVLAP/NIST). NVLAP Code: 200611-0. Effective through December 31, 2004.
- **ACA**
  SGS-CSTC Standards Technical Services Co., Ltd., EMC Laboratory can also perform testing for the Australian C-Tick mark as a result of our NVLAP accreditation.
- **VCCI**
  The 3m Semi-anechoic chamber and Shielded Room (11.5m x 4m x 4m) of SGS-CSTC Standards Technical Services Co., Ltd. have been registered in accordance with the Regulations for Voluntary Control Measures with Registration No.: R-1599 and C-1706 respectively.
  Date of Registration: February 28, 2003. Valid until May 30, 2005
- **SGS UK(Certificate No.: 32), SGS-TUV SAARLAND and SGS-FINKO**
  Have approved SGS-CSTC Standards Technical Services Co., Ltd., EMC Laboratory as a supplier of EMC TESTING SERVICES and SAFETY TESTING SERVICES.
- **CNAL – LAB Code: L0141**
  SGS-CSTC Standards Technical Services Co., Ltd., EMC Laboratory has been assessed and in compliance with CNAL/AC01:2002 accreditation criteria for testing laboratories (identical to ISO/IEC 17025:1999 General Requirements) for the Competence of Testing Laboratories.
- **FCC – Registration No.: 282399**
  SGS-CSTC Standards Technical Services Co., Ltd., EMC Laboratory has been registered and fully described in a report filed with the (FCC) Federal Communications Commission. The acceptance letter from the FCC is maintained in our files. Registration 282399, May 31, 2002. With the above and NVLAP, SGS-CSTC is an authorized test laboratory for the DoC process.
- **Industry Canada (IC)**
  The 3m Semi-anechoic chamber of SGS-CSTC Standards Technical Services Co., Ltd. has been registered by Certification and Engineering Bureau of Industry Canada for radio equipment testing with Registration No.: 5169.

5 Test Results

5.1 Test Instruments

Test Equipment	Manufacturer	Model	Asset No.	Cal. Due Date
3m Semi- Anechoic Chamber	Frankonia	3m method	EMC0501	15-02-2005
EMI Test Receiver	Rohde & Schwarz	ESCS30	EMC0506	15-02-2005
Bilog Type Antenna	Schaffner Chase	CBL6143	EMC0519	17-01-2005
Coaxial cable	SGS-CSTC	10m	EMC0514	04-11-2004
Spectrum Analyzer	ROHDE & SCHWARZ	FSP 30	EMC0521	01-04-2005
Horn Antenna	ROHDE & SCHWARZ	HF906	EMC0517	01-04-2005
Temperature, Humidity & Barometer	Oregon Scientific	BA-888	EMC0003	24-07-2004
Peramplifier	Agilent	8449B	EMC0520	30-06-2005
Coaxial cable	SGS	N/A	EMC0514	01-06-2005
Shielding Room	Frankonia	12 x 4 x 4 m^3	EMC0103	N/A
LISN	Schaffner Chase	MNZ050D11	1421	04-11-2004
EMI Test Receiver	Rohde& Schwarz	ESCS30	100086	09-12-2004
Coaxial Cable	SGS	2m	EMC0107	01-06-2005

5.2 E.U.T. Operation

Input voltage: Host (Transceiver) supplied by X-box.

Operating Environment:
Temperature: 24.0 °C
Humidity: 56 % RH
Atmospheric Pressure: 1012 mbar

EUT Operation: Test the EUT as a product which has frequency hopping system. The total hopping channels are 80 channels (0 to 79 channel), the fundamental frequencies are from 2.402GHz to 2.481GHz.

The test procedure provided by applicant enabled the EUT to transmit and receive data at lowest (**Channel 0: 2.402GHz**), middle (**Channel 39: 2.402GHz**), and highest channel (**Channel 79: 2.481GHz**), frequencies individually.

Pre-test all the frequencies mode and their power status, compliance test in the worse case: Channel 79, Channel 39,, Channel 0. (At +2dB RF power status)

5.3 Test Result

5.3.1 Conducted Emissions Mains Terminals, 150kHz to 30MHz

Test Requirement: FCC 15.209
Test Method: ANSI C63.4
Test Date: 12 September 2004
Frequency Range: 150KHz to 30MHz
Class / Severity: Class B
Detector: Peak for pre-scan (9kHz Resolution Bandwidth)
Quasi-Peak if maximised peak within 6dB of Quasi-Peak limit

5.3.1.1 E.U.T. Operation

Operating Environment:
Temperature: 24.0 °C Humidity: 52 % RH Atmospheric Pressure: 1012 Mbar

EUT Operation: All the test modes (including with **transmitting mode and receiving mode**) are almost same, the test data only was shown for the mode:
Test the host (Transceiver) in Channel 39 (RF power +2dB Status).

5.3.1.2 Measurement Data

An initial pre-scan was performed on the live and neutral lines with peak detector.

Quasi-Peak and Average measurement were performed at the frequencies with maximized peak emission were detected.

The following Quasi-Peak and Average measurements were performed on the EUT .

Freq. MHz	Line	Trans. dB	QP Reading dBuV	QP Level dBuV	Limit dBuV	Margin dB	AV Reading dBuV	AV Level dBuV	Limit dBuV	Margin dB
0.177	Live	0.1	48.8	48.9	64.6	15.7	46.7	46.8	54.6	7.8
0.236	Live	0.1	41.8	41.9	62.2	20.3	41.4	41.5	52.2	10.7
0.355	Live	0.0	33.8	33.8	58.8	25.0	33.9	33.9	48.8	14.9
0.474	Live	0.0	30.6	30.6	56.4	25.8	30.8	30.8	46.4	15.6
15.327	Live	0.4	34.8	35.2	60.0	24.8	30.0	30.4	50.0	19.6
17.696	Live	0.4	34.2	34.6	60.0	25.4	29.7	30.1	50.0	19.9
0.177	Neutral	0.1	47.4	47.5	64.6	17.1	46.0	46.1	54.6	8.5
0.236	Neutral	0.1	40.5	40.6	62.2	21.6	40.2	40.3	52.2	11.9
0.355	Neutral	0.0	32.1	32.1	58.8	26.7	32.9	32.9	48.8	15.9
0.474	Neutral	0.0	30.2	30.2	56.4	26.2	30.3	30.3	46.4	16.1
15.327	Neutral	0.4	34.4	34.8	60.0	25.2	30.2	30.6	50.0	19.4
17.696	Neutral	0.4	34.0	34.4	60.0	25.6	29.9	30.3	50.0	19.7

Transducer = Insertion Loss of LISN + Cable Loss.

5.3.2 Radiated Emissions

Test Requirement: FCC 15.209
Test Method: Base on ANSI 63.4.
Test Date: 12 September 2004
Measurement Distance: 3m (Semi-Anechoic Chamber)
Frequency range 30 MHz – 25GHz for transmitting mode.
Test instrumentation resolution bandwidth 120 kHz (30 MHz - 1000 MHz)
1 MHz (1000 MHz – 25GHz)

Receive antenna scan height 1 m - 4 m, polarization Vertical / Horizontal

Limit: 40.0 dBμV/m between 30MHz & 88MHz
43.5 dBμV/m between 88MHz & 216MHz
46.0 dBμV/m between 216MHz & 960MHz
54.0 dBμV/m zbove 960MHz

Test Configuration:

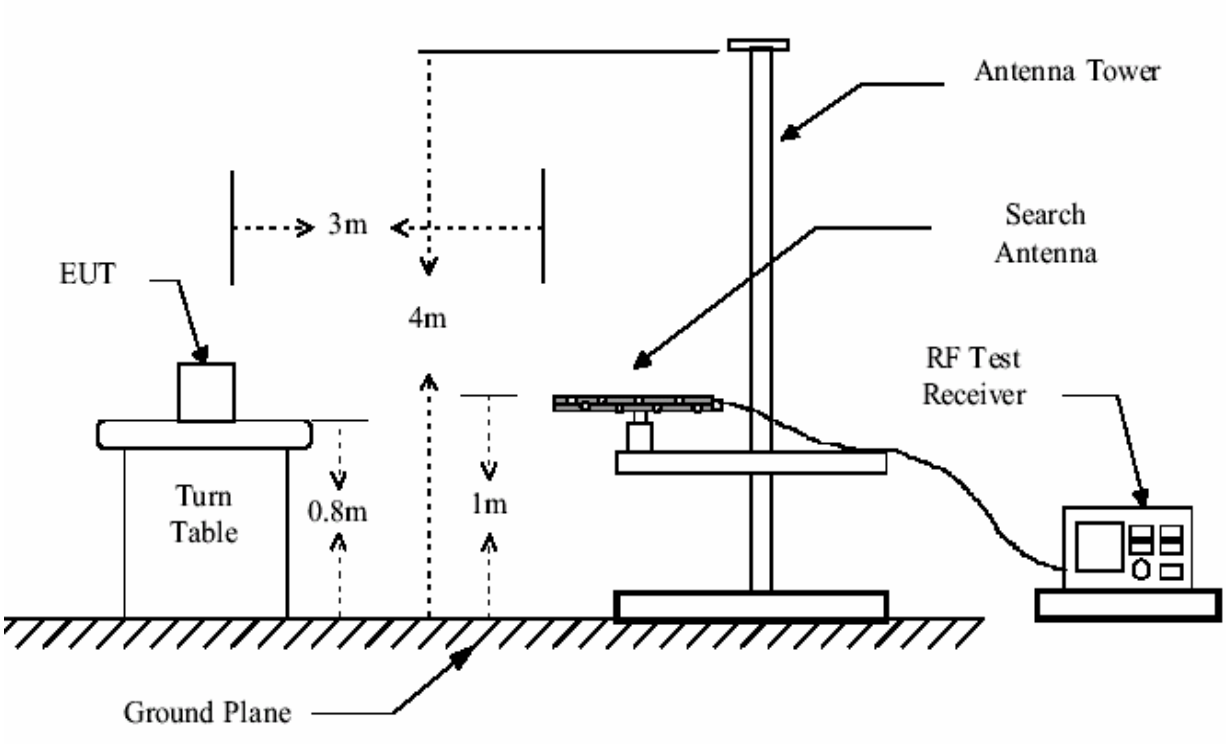

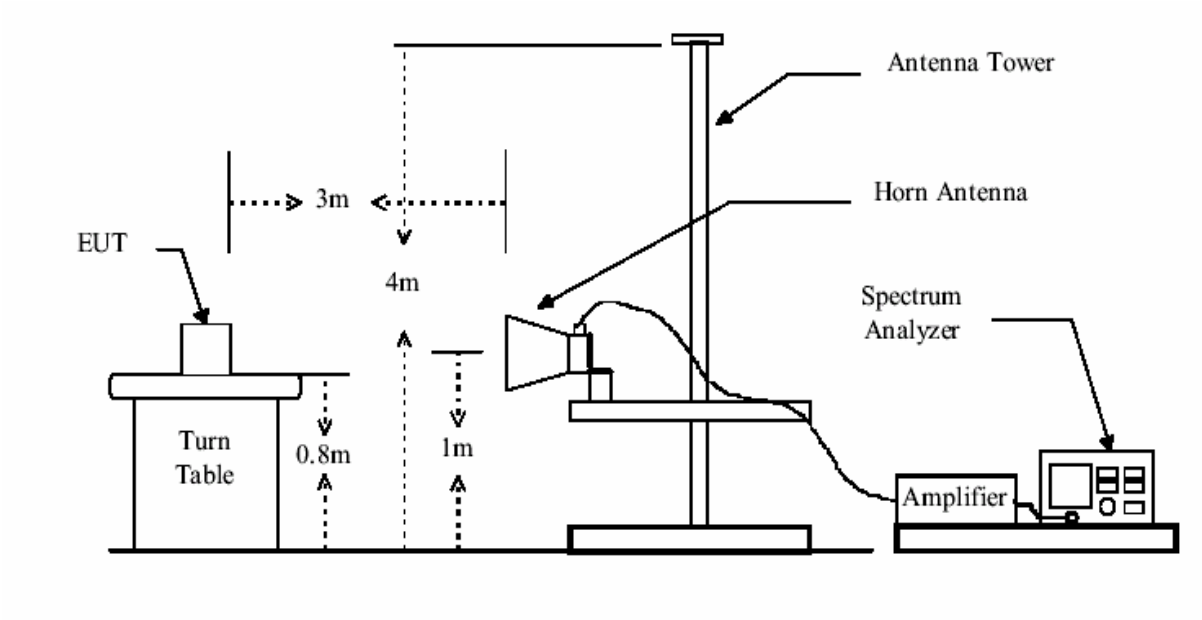

Test Procedure: The procedure uesd was ANSI Standard C63.4-2000. The receive was scanned from 30MHz to 25GHz.When an emission was found,the table was roated to produce the maximum signal strength. An initial pre-scan was performed for in peak detection mode using the receiver. The EUT was measured for both the Horizontal and Vertical polarities and performed a pre-test three orthogonal planes. For intentional radiators, measurements of the variation of the input power or the radiated signal level of the fundamental frequency component of the emission, as appropriate, shall be performed with the supply voltage varied between 85% and 115% of the nominal rated supply voltage. The worst case emissions were reported.

The field strength is calculated by adding the Antenna Factor, Cable Factor & Peramplifier . The basic equation with a sample calculation is as follows:

Final Test Level =Receiver Reading + Antenna Factor + Cable Factor – Peramlifer Factor

The following test results were performed on the EUT

5.3.2.1 Harmonics Emissions

Test mode: **perform the test in transmitting status:**

Test the racing wheel in Channel 0 (RF power +2dB Status)

Harmonics & Spurious Emissions

Peak Measurement

Test Frequency (GHz)		Measuring Level (dBuV/m)		Limits (dBuV/m)	Margin (dB)	
		Vertical	Horizontal		Vertical	Horizontal
2)	4.804	55.7	50.6	74.0	18.3	23.4
3)	7.206	58.9	55.6	74.0	15.1	18.4
4)	9.608	N/A	N/A	74.0	N/A	N/A
5)	12.010	N/A	N/A	74.0	N/A	N/A
6)	14.412	N/A	N/A	74.0	N/A	N/A
7)	16.814	N/A	N/A	74.0	N/A	N/A
8)	19.216	N/A	N/A	74.0	N/A	N/A
9)	21.618	N/A	N/A	74.0	N/A	N/A
10)	24.020	N/A	N/A	74.0	N/A	N/A
Average Measurement						
2)	4.804	39.1	38.1	54.0	14.9	15.9
3)	7.206	43.6	42.2	54.0	10.4	11.8
4)	9.608	N/A	N/A	54.0	N/A	N/A
5)	12.010	N/A	N/A	54.0	N/A	N/A
6)	14.412	N/A	N/A	54.0	N/A	N/A
7)	16.814	N/A	N/A	54.0	N/A	N/A
8)	19.216	N/A	N/A	54.0	N/A	N/A
9)	21.618	N/A	N/A	54.0	N/A	N/A
10)	24.020	N/A	N/A	54.0	N/A	N/A

N/A: refer to remark 1).

Test mode: **perform the test in transmitting status :**

Test the racing wheel in Channel 39 (RF power +2dB Status)

Harmonics & Spurious Emissions:

Peak Measurement

Test Frequency (GHz)	Measuring Level (dBuV/m)		Limits (dBuV/m)	Margin (dB)	
	Vertical	Horizontal		Vertical	Horizontal
11) 4.882	57.9	51.9	74.0	16.1	22.1
12) 7.323	59.7	59.2	74.0	14.3	14.8
13) 9.764	N/A	N/A	74.0	N/A	N/A
14) 12.205	N/A	N/A	74.0	N/A	N/A
15) 14.646	N/A	N/A	74.0	N/A	N/A
16) 17.087	N/A	N/A	74.0	N/A	N/A
17) 19.528	N/A	N/A	74.0	N/A	N/A
18) 21.969	N/A	N/A	74.0	N/A	N/A
19) 24.410	N/A	N/A	74.0	N/A	N/A
Average Measurement					
11) 4.804	39.6	38.2	54.0	14.4	15.8
12) 7.206	42.1	40.6	54.0	11.9	13.4
13) 9.608	N/A	N/A	54.0	N/A	N/A
14) 12.010	N/A	N/A	54.0	N/A	N/A
15) 14.646	N/A	N/A	54.0	N/A	N/A
16) 17.087	N/A	N/A	54.0	N/A	N/A
17) 19.528	N/A	N/A	54.0	N/A	N/A
18) 21.969	N/A	N/A	54.0	N/A	N/A
19) 24.410	N/A	N/A	54.0	N/A	N/A

N/A: refer to remark 1).

Test mode: **perform the test in transmitting status :**

Test the racing wheel in Channel 79 (RF power +2dB Status)

Harmonics & Spurious Emissions:

Peak Measurement

Test Frequency (GHz)	Measuring Level (dBuV/m)		Limits (dBuV/m)	Margin (dB)	
	Vertical	Horizontal		Vertical	Horizontal
20) 4.962	56.9	59.5	74.0	17.1	14.5
21) 7.443	62.0	56.6	74.0	12.0	17.4
22) 9.924	N/A	N/A	74.0	N/A	N/A
23) 12.405	N/A	N/A	74.0	N/A	N/A
24) 14.886	N/A	N/A	74.0	N/A	N/A
25) 17.367	N/A	N/A	74.0	N/A	N/A
26) 19.848	N/A	N/A	74.0	N/A	N/A
27) 22.329	N/A	N/A	74.0	N/A	N/A
28) 24.810	N/A	N/A	74.0	N/A	N/A
Average Measurement					
20) 4.804	39.6	38.0	54.0	14.4	16.0
21) 7.206	43.9	40.7	54.0	10.1	13.3
22) 9.608	N/A	N/A	54.0	N/A	N/A
23) 12.010	N/A	N/A	54.0	N/A	N/A
24) 14.886	N/A	N/A	54.0	N/A	N/A
25) 17.367	N/A	N/A	54.0	N/A	N/A
26) 19.848	N/A	N/A	54.0	N/A	N/A
27) 22.329	N/A	N/A	54.0	N/A	N/A
28) 24.810	N/A	N/A	54.0	N/A	N/A

N/A: refer to remark 1).

Remark:

1). N/A: For this intentional radiator operates below 10 GHz, the spectrum shall be investigated to the tenth harmonic of the highest fundamental frequency. And above the fifth harmonic of this intentional radiator, the disturbance is very low. So the test result only displays to 5th harmonic.

2). According to 15.249 (d) As shown in Section 15.35(b), for frequencies above 1000 MHz, the above field strength limits are based on average limits. However, the peak field strength of any emission shall not exceed the maximum permitted average limits specified above by more than 20 dB under any condition of modulation.

3). The test only perform the EUT in transmitting status since the test frequencies were over 1GHz only required transmitting status.

TEST RESULTS: The unit does meet the FCC requirements.

5.3.2.2 Other Spurious Emissions.

Test Requirement: FCC Part15 Section 15.209

Test Method: Based on FCC Part15 B

Measurement Distance: 3m

Limit: 40.0 dBμV/m between 30MHz & 88MHz

43.5 dBμV/m between 88MHz & 216MHz

46.0 dBμV/m between 216MHz & 960MHz

54.0 dBμV/m above 960MHz

Detector: Peak for pre-scan , 120kHz resolution bandwidth within 1GHz, 1MHz resolution bandwidth above 1GHz

Quasi-Peak if maximised peak within 6dB of limit

All the test modes(including with **transmitting mode and receiving mode**), the test data only was shown for the worsted case mode:
The following measurement result were performed on the EUT:

1. **Test the racing wheel in Channel 0 (RF power +2dB Status) transmitting mode.**

Frequency (Hz)	Antenna Polarization	Emission Level (dBuV/m)	Limit dBuV/m)	Margin (dB)
78.235M	Horizontal	21.3	40.0	18.7
102.368 M	Horizontal	28.9	43.5	14.6
120.361 M	Horizontal	29.8	43.5	13.7
132.350 M	Horizontal	31.3	43.5	12.2
138.439 M	Horizontal	33.2	43.5	10.3
204.639 M	Horizontal	27.3	43.5	16.2
1.036G	Horizontal	32.6	54.0	21.4
1.396G	Horizontal	36.2	54.0	17.8
1.594G	Horizontal	37.1	54.0	16.9
42.181 M	Vertical	31.3	40.0	8.7
84.260 M	Vertical	31.2	40.0	8.8
102.266 M	Vertical	27.8	43.5	15.7
126.403 M	Vertical	24.3	43.5	19.2
240.164 M	Vertical	39.8	46.0	6.2
320.221 M	Vertical	40.3	46.0	5.7
1.036G	Vertical	37.9	54.0	16.1
1.396G	Vertical	34.5	54.0	19.5
1.594G	Vertical	33.1	54.0	20.9

The following measurement result were performed on the EUT:

2. **Test the racing wheel in Channel 0 Receiving mode.**

Frequency (MHz)	Antenna Polarization	Emission Level (dBuV/m)	Limit dBuV/m)	Margin (dB)
90.255	Horizontal	28.6	40.0	11.4
96.284	Horizontal	31.5	40.0	8.5
120.361	Horizontal	31.6	43.5	11.9
138.439	Horizontal	34.6	43.5	8.9
174.560	Horizontal	27.8	43.5	15.7
240.164	Horizontal	34.6	46.0	11.4
84.240	Vertical	31.3	40.0	8.7
95.997	Vertical	23.5	43.5	20.0
120.361	Vertical	25.6	43.5	17.9
144.434	Vertical	38.5	43.5	5.0
240.174	Vertical	40.4	46.0	5.6
757.166	Vertical	38.9	46.0	7.1

The field strength is calculated by adding the Antenna Factor, Cable Factor & Peramplifier . The basic equation with a sample calculation is as follows:
Final Test Level =Receiver Reading + Antenna Factor + Cable Factor – Peramlifer Factor

TEST RESULTS: The unit does meet the FCC requirements

5.3.3 Maximum Peak Output Power

Test Requirement:	FCC Part15 C
Test Method:	Base on ANSI 63.4.
Test Date:	12 September 2004
Requirements:	Regulation 15.247 (b) The Limit of Maximum Peak Output Power Measurement is 1W (30dBm).
Test mode:	Compliance test in the worse case: Channel 0, Channel 39, Channel 79. (At +2dB RF power status).

Test Configuration:

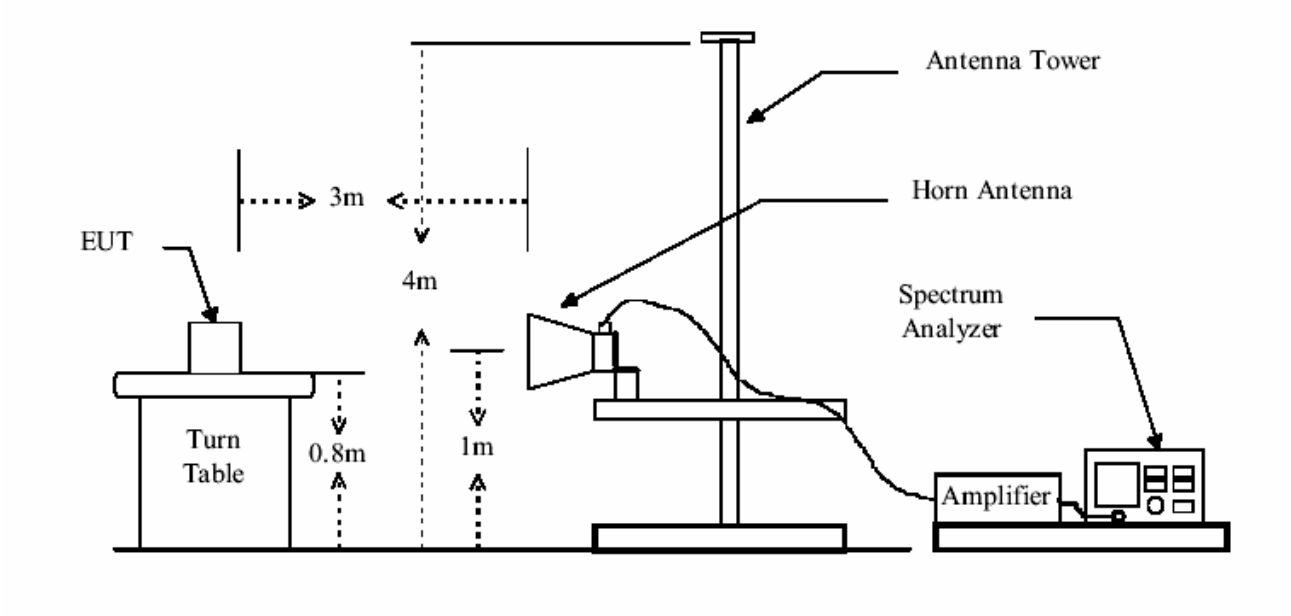

Test Procedure:

The technique used to find the output power of the transmitter was the antenna substitution method. Substitution method was performed to determine the actual ERP emission levels of the EUT.

The following test procedure as below:

1. The EUT was powered ON and placed on a table in the chamber. The antenna of the transmitter was extended to its maximum length.

2. The fundamental frequency of the transmitter was maximized on the test receiver display by raising and lowering the receive antenna and by rotating the turntable. After the fundamental emission was maximized, a field strength measurement was made.

3. Steps 1 and 2 were performed with the EUT and the receive antenna in both vertical and horizontal polarization.

4. Calculate the transmitter's peak power using the following equation:
   Power= (E x d)squared / (30 x G)
   Where:E= the measured maximum field strength in V/m.
   Set the RBW > 6dB bandwidth of the emission or use a peak power meter..
   .G= the numeric gain of the transmitting antenna over an isotropic radiator.
   .d= the distance in meters from which the field strength was measured.
   .P= the power in watts is the final Maximum Peak Output Power .

Test Result:

Test Channel	Fundamental Frequency (GHz)	Filed Strength (dBuV/m)	Gain (dBi)	Output Power (dBm)	Limit (dBm)	PASS/FAIL
0	2.402	93.1	+2	-3.13	30.0	Pass
39	2.441	90.8	+2	-5.42	30.0	Pass
79	2.481	91.6	+2	-4.63	30.0	Pass

Remark: The manufacturer for the antenna gain specification is +2dBi (if test in +2dB RF output power mode).

TEST RESULTS: The unit does meet the FCC requirements.

5.3.4 Hopping Channel Number

Test Requirement:	FCC Part15 C
Test Method:	Based on FCC Part15 C Section 15.247
Test Date:	18 September 2004
Requirements:	Regulation 15.247 (b) (1) For frequency hopping systems operating in the 2400-2483.5 MHz band employing at least 75 hopping channels.
Test result:	Total channels are 80 channels, channel 0 to channel 79. The unit does meet the FCC requirements Please refer the graph as below:

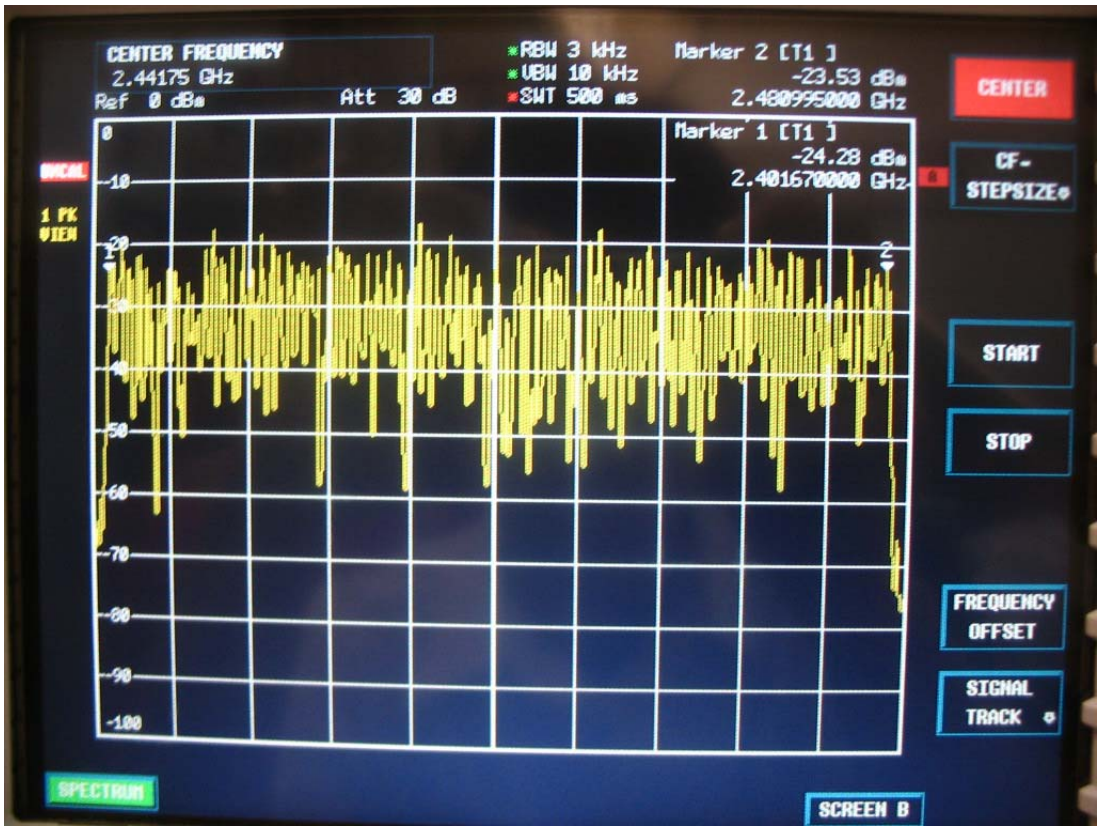

5.3.5 Occupied Bandwidth & Carrier Frequencies Separated

Test Requirement: FCC Part 15 C

Test Method: Based on FCC Part15 C Section 15.247:

Test Date: 18 September 2004

Requirements: (a) Operation under the provisions of this Section is limited to frequency hopping and direct sequence spread spectrum intentional radiators that comply with the following provisions: (1) Frequency hopping systems shall have hopping channel carrier frequencies separated by a minimum of 25 kHz or the 20 dB bandwidth of the hopping channel, whichever is greater.

5.3.5.1 Occupied Bandwidth:

Test Procedure: The transmitter output was connected to the spectrum analyzer through an attenuator. The bandwidth of the fundamental frequency was measured by spectrum analyzer with 10 kHz RBW and 30 kHz VBW. The 20 dB bandwidth is defined as the total spectrum the power of which is higher than peak power minus 20 dB. Analyzer and the attached plot was taken.

Test result:

Test Channel	20 dB bandwidth	PASS/FAIL
0	1.060MHz	Pass
39	900KHz	Pass
79	860KHz	Pass

The unit does meet the FCC requirements. Please refer the graph as below:

1. Channel 0: 20dB Bandwidth

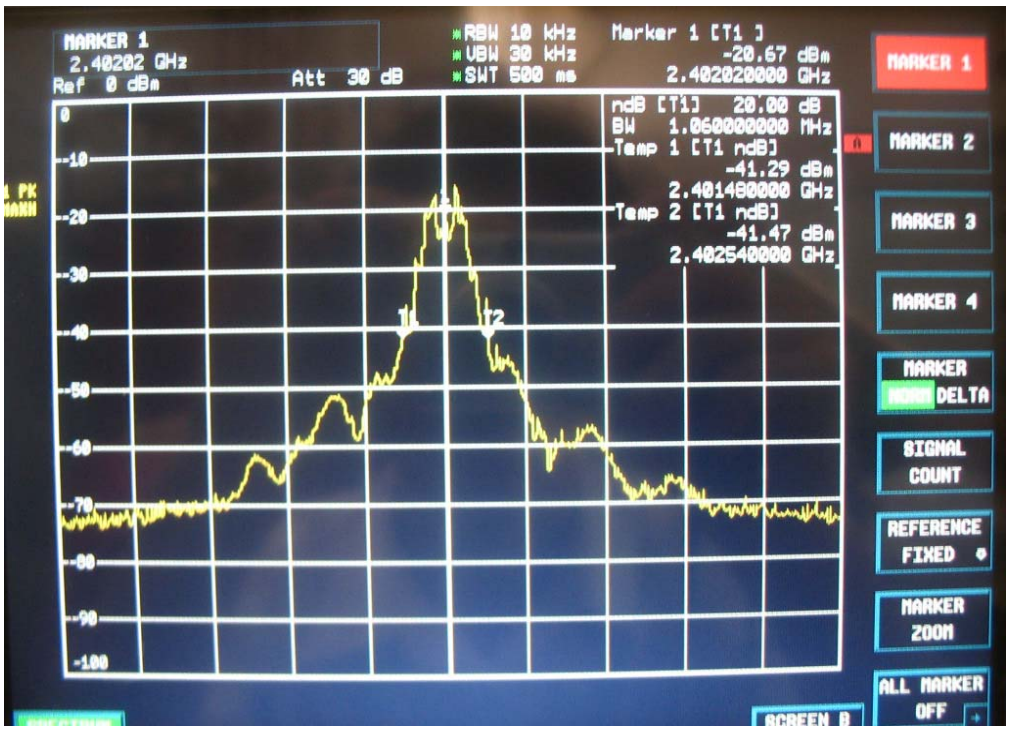

2. Channel 39: 20dB Bandwidth

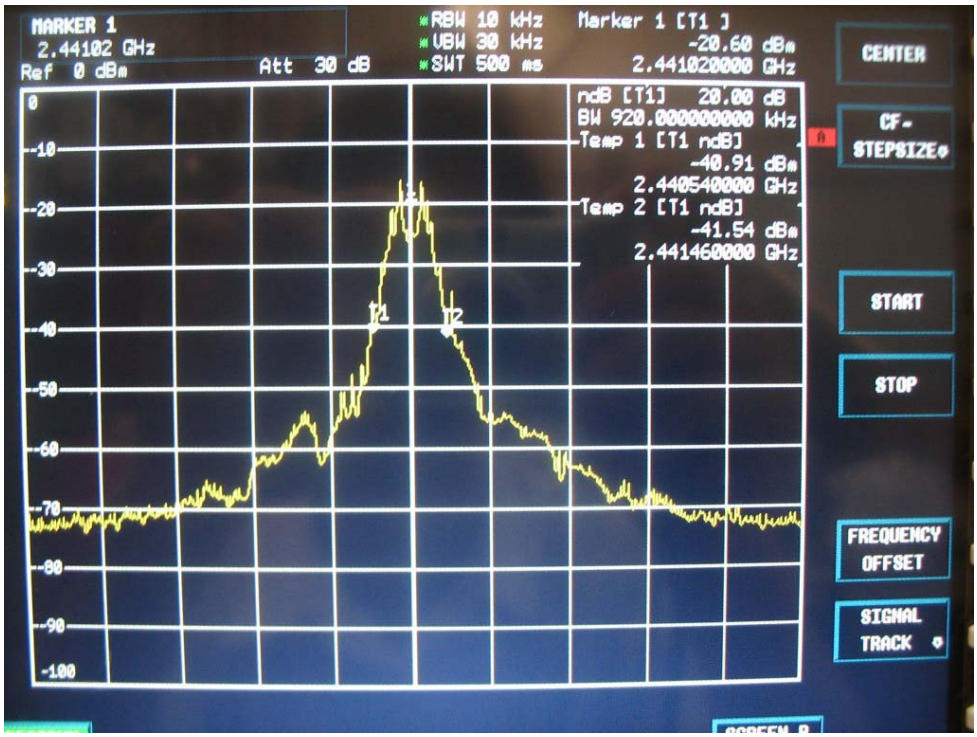

3. Channel 79: 20dB Bandwidth

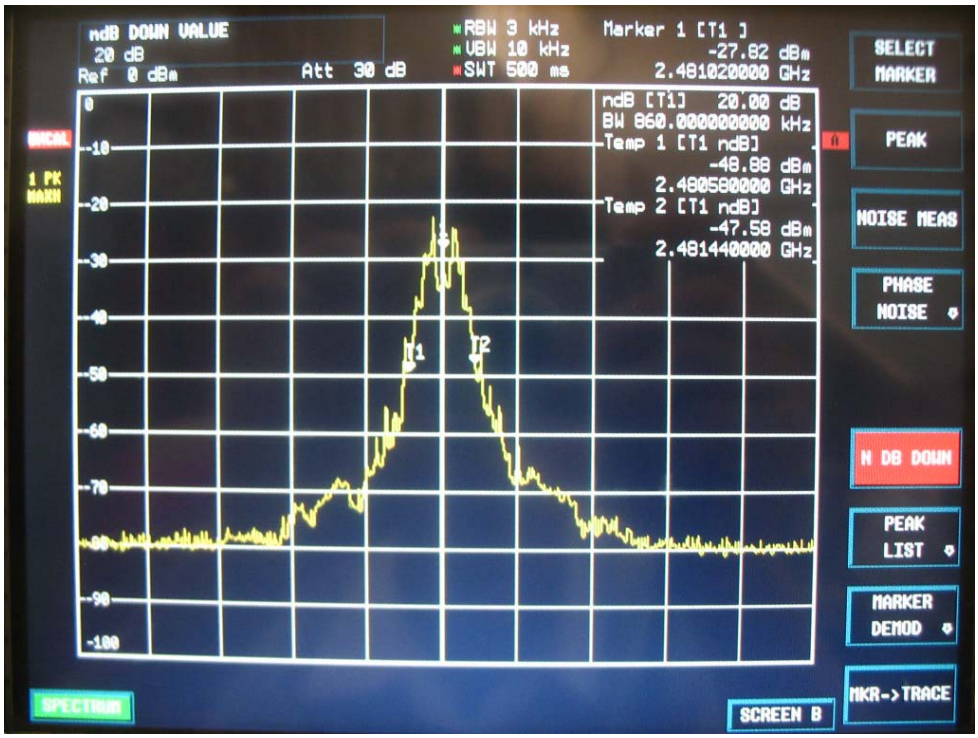

5.3.5.2 Carrier Frequencies Separated

Test Procedure: The transmitter output was connected to the spectrum analyzer through an attenuator. The bandwidth of the fundamental frequency was measured by spectrum analyzer with 3 kHz RBW and 10 kHz VBW. The 20 dB bandwidth is defined as the total spectrum the power of which is higher than peak power minus 20 dB. Analyzer and the attached plot was taken.

Test result:

Test Channel	Carrier Frequencies Separated	PASS/FAIL
Lower Channels (channel 0 and channel 1)	1.0MHz	Pass
Middle Channels (channel 39 and channel 40)	1.0MHz	Pass
Upper Channels (channel 78 and channel 79)	1.0MHz	Pass

The unit does meet the FCC requirements.

Please refer the graph as below:

1. Lower Channels: **Carrier Frequencies Separated**

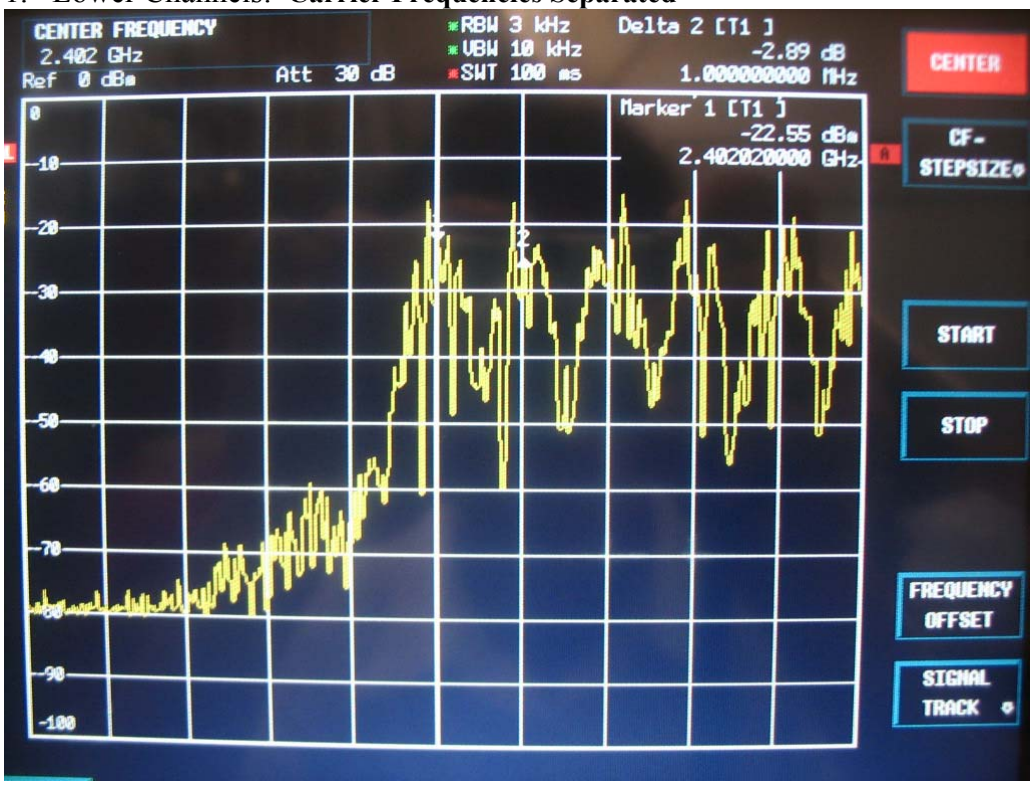

2. Middle Channels: **Carrier Frequencies Separated**

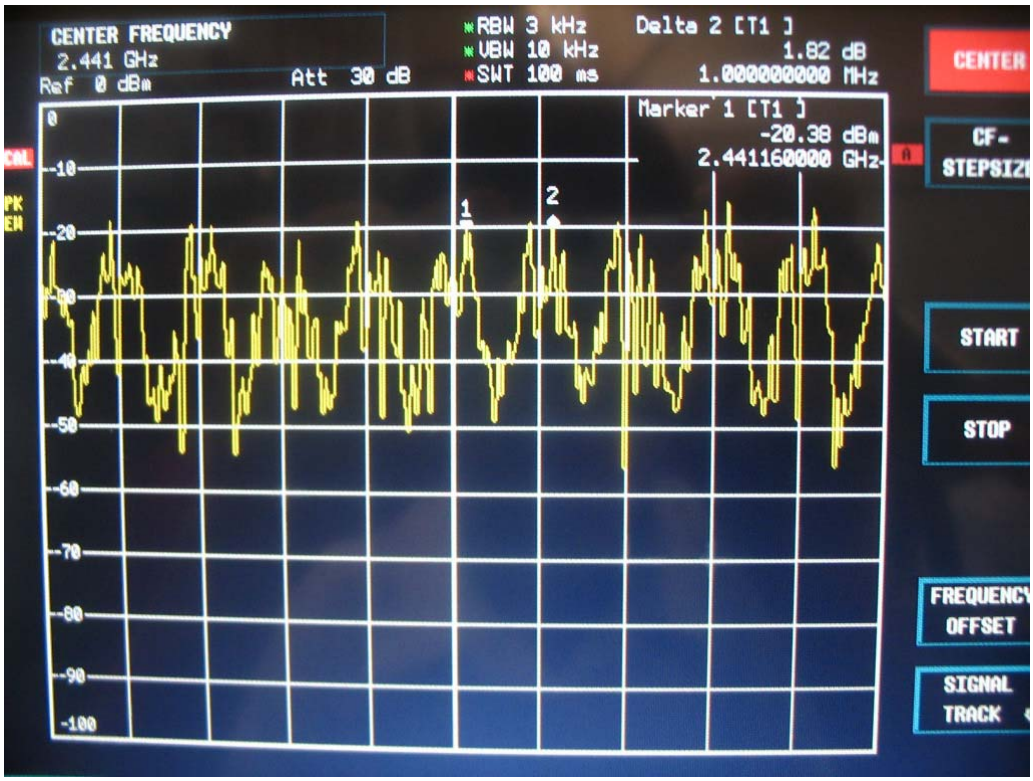

3. Upper Channels: **Carrier Frequencies Separated**

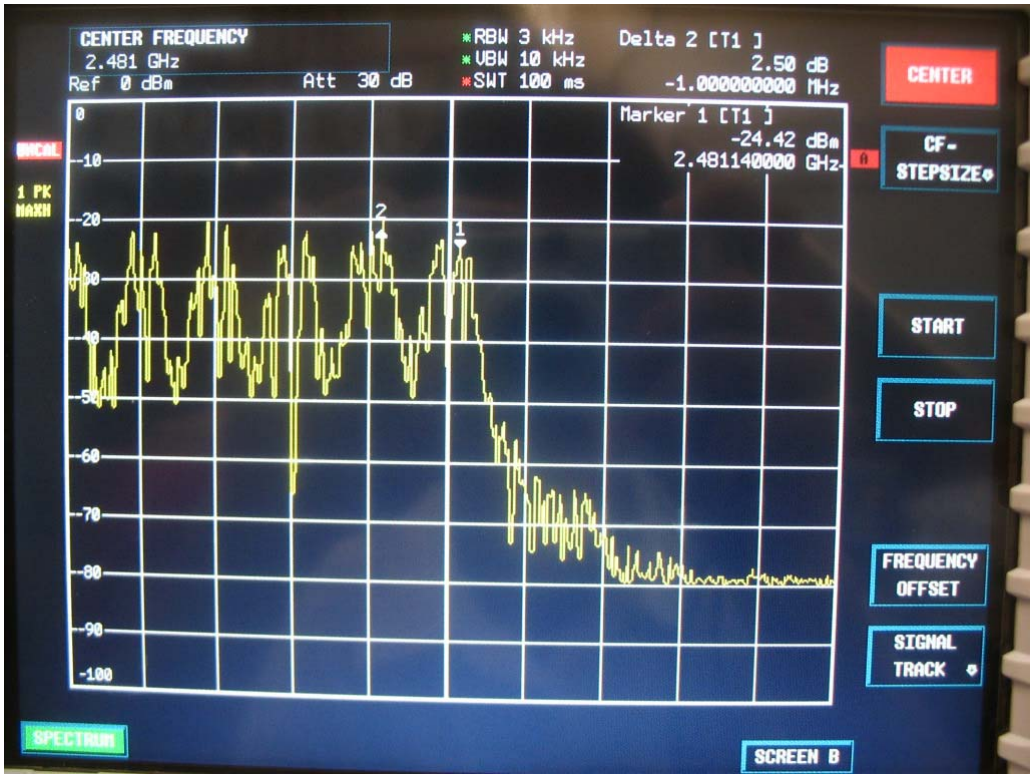

5.3.6 Band Edges Requirement

Test Requirement:	FCC Part 15 C
Test Method:	Based on FCC Part15 C Section 15.247: Operation within the band 2400 – 2483.5 MHz
Test Date:	18 September 2004
Requirements:	Section 15.247 (c) In any 100 kHz bandwidth outside the frequency band in which the spread spectrum intentional radiator is operating, the radio frequency power that is produced by the intentional radiator shall be at least 20 dB below that in the 100 kHz bandwidth within the band that contains the highest level of the desired power, based on either an RF conducted or a radiated measurement. Attenuation below the general limits specified in Section 15.209(a) is not required. In addition, radiated emissions which fall in the restricted bands, as defined in Section 15.205(a), must also comply with the radiated emission limits specified in Section 15.209(a) (see Section 15.205(c)).

5.3.6.1 100 kHz Bandwidth Outside the Frequency Band

Method of Measurement:	Set RBW of spectrum analyzer to 100 kHz and VBW of spectrum analyzer to 300 kHz with suitable frequency span including 100 kHz bandwidth from band edge. The band edges was measured and recorded.

Test Result:

The Lower Edges: the value is -29.39dBm that is attenuated more than 20dB.

The Upper Edges: the value is –32.76dBm that is attenuated more than 20dB.

The unit does meet the FCC requirements

The graph as below, represents the emissions take for this device.

1. For Lower Channel: the fundamental frequency is **2.402G Hz.**

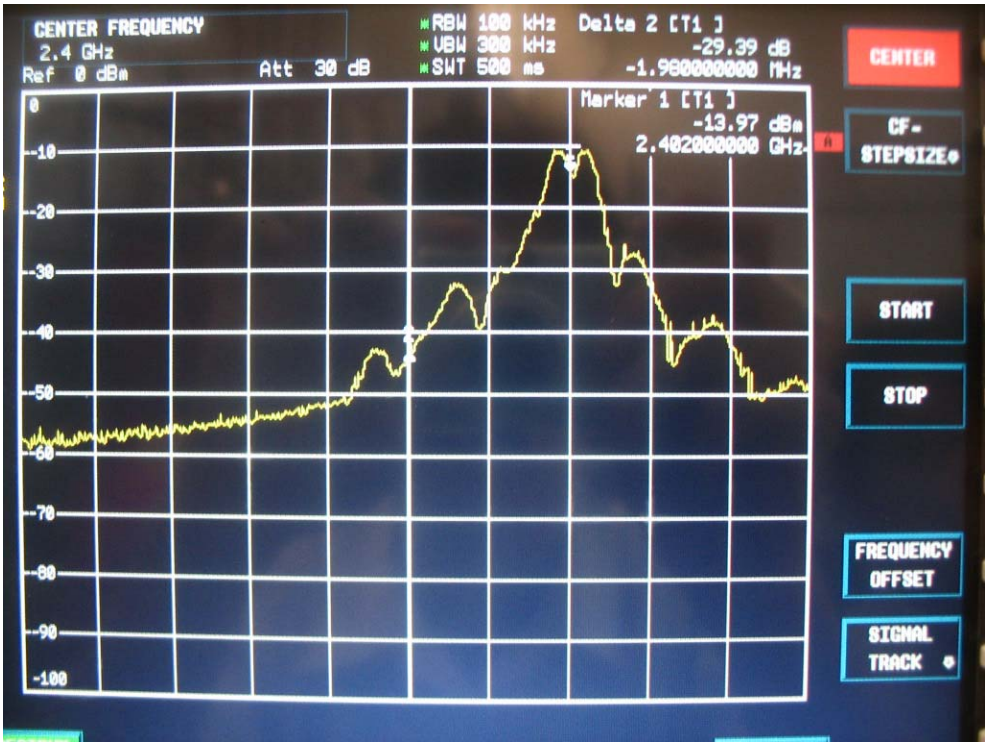

2. For Upper Channel: the fundamental frequency is **2.481GHz.**

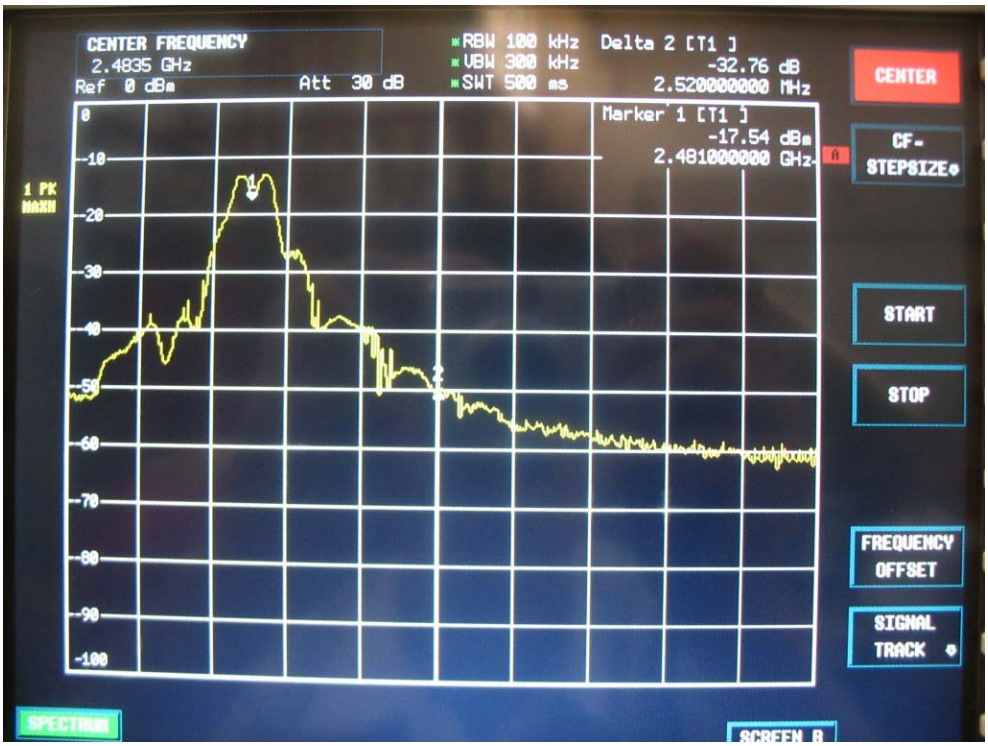

5.3.6.2 Radiated Emissions which fall in the restricted bands

Test Requirement: Section 15.247 (c) In addition, radiated emissions which fall in the restricted bands, as defined in Section 15.205(a), must also comply with the radiated emission limits specified in Section 15.209(a) (see Section 15.205(c)).

Test Method: Base on ANSI 63.4.

Test Date: 18 September 2004

Measurement Distance: 3m (Semi-Anechoic Chamber)

Limit: 40.0 dBμV/m between 30MHz & 88MHz

43.5 dBμV/m between 88MHz & 216MHz

46.0 dBμV/m between 216MHz & 960MHz

54.0 dBμV/m zbove 960MHz

Detector: Peak for pre-scan , 120kHz resolution bandwidth within 1GHz, 1MHz resolution bandwidth above 1GHz

Test Configuration:

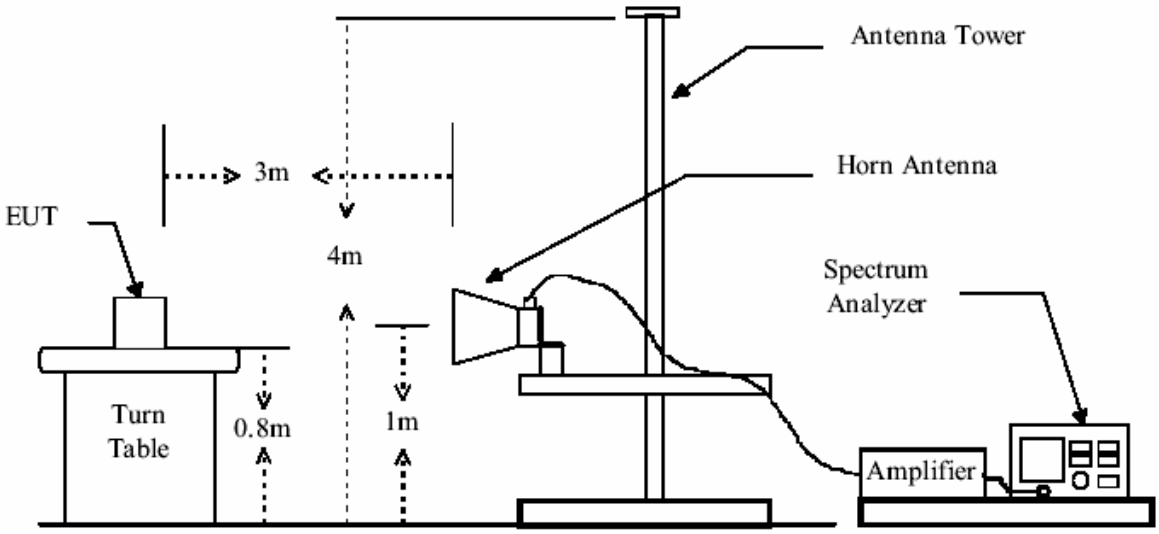

Test Procedure: The procedure uesd was ANSI Standard C63.4-2000. The receive was scanned from 30MHz to 25GHz.When an emission was found,the table was roated to produce the maximum signal strength. An initial pre-scan was performed for in peak detection mode using the receiver. The EUT was measured for both the Horizontal and Vertical polarities and performed a pre-test three orthogonal planes. For intentional radiators, measurements of the variation of the input power or the radiated signal level of the fundamental frequency component of the emission, as appropriate, shall be performed with the supply voltage varied between 85% and 115% of the nominal rated supply voltage. The worst case emissions were reported.

The field strength is calculated by adding the Antenna Factor, Cable Factor & Peramplifier . The basic equation with a sample calculation is as follows:

Final Test Level =Receiver Reading + Antenna Factor + Cable Factor – Peramlifer Factor

Test Result:

1. Channel 0 (2.402GHz)

Test Frequency (MHz)	Peak Level (dBuV/m)	Average Level (dBuV/m)	Peak Limit (dBuV/m)	Average Limit (dBuV/m)	Margin (dB)	
					Peak	AV
2390.000	52.8	38.3	74.0	54.0	21.2	15.7
2483.500	50.6	37.1	74.0	54.0	23.4	16.9

2. Channel 39 (2.441GHz)

Test Frequency (MHz)	Peak Level (dBuV/m)	Average Level (dBuV/m)	Peak Limit (dBuV/m)	Average Limit (dBuV/m)	Margin (dB)	
					Peak	AV
2390.000	52.0	37.9	74.0	54.0	22.0	16.1
2483.500	50.7	38.1	74.0	54.0	23.3	15.9

3. Channel 79 (2.481GHz)

Test Frequency (MHz)	Peak Level (dBuV/m)	Average Level (dBuV/m)	Peak Limit (dBuV/m)	Average Limit (dBuV/m)	Margin (dB)	
					Peak	AV
2390.000	53.1	40.6	74.0	54.0	20.9	13.4
2483.500	51.6	38.2	74.0	54.0	22.4	15.8

The unit does meet the FCC requirements.

Section 15.205 Restricted bands of operation.

(a) Except as shown in paragraph (d) of this section, only spurious emissions are permitted in any of the frequency bands listed below:

MHz	MHz	MHz	GHz
0.090 - 0.110	16.42 - 16.423	399.9 - 410	4.5 - 5.15
[1]0.495 - 0.505	16.69475 - 16.69525	608 - 614	5.35 - 5.46
2.1735 - 2.1905	16.80425 - 16.80475	960 - 1240	7.25 - 7.75
4.125 - 4.128	25.5 - 25.67	1300 - 1427	8.025 - 8.5
4.17725 - 4.17775	37.5 - 38.25	1435 - 1626.5	9.0 - 9.2
4.20725 - 4.20775	73 - 74.6	1645.5 - 1646.5	9.3 - 9.5
6.215 - 6.218	74.8 - 75.2	1660 - 1710	10.6 - 12.7
6.26775 - 6.26825	108 - 121.94	1718.8 - 1722.2	13.25 - 13.4
6.31175 - 6.31225	123 - 138	2200 - 2300	14.47 - 14.5
8.291 - 8.294	149.9 - 150.05	2310 - 2390	15.35 - 16.2
8.362 - 8.366	156.52475 - 156.52525	2483.5 - 2500	17.7 - 21.4
8.37625 - 8.38675	156.7 - 156.9	2655 - 2900	22.01 - 23.12
8.41425 - 8.41475	162.0125 - 167.17	3260 - 3267	23.6 - 24.0
12.29 - 12.293	167.72 - 173.2	3332 - 3339	31.2 - 31.8
12.51975 - 12.52025	240 - 285	3345.8 - 3358	36.43 - 36.5
12.57675 - 12.57725	322 - 335.4	3600 - 4400	([2])
13.36 - 13.41			

5.3.7 Dwell Time

Test Requirement: FCC Part 15 C
Test Method: Based on FCC Part15 C Section 15.247:
Test Date: 18 September 2004

Requirements: 15.247 a (1)(iii) Frequency hopping systems in the 2400-2483.5 MHz band shall use at least15 non-overlapping channels. The average time of occupancy on any channel shall not be greater than 0.4 seconds within a period of 0.4 seconds multiplied by the number of hopping channels employed.

Test Procedure:

1. Set RBW of spectrum analyzer to 1MHz and VBW of spectrum analyzer to 1MHz , Set the test channel frequency span to 0.
2. Set the sweep time of spectrum analyzer to 5ms, measure the single pulse during time.
3. Set the sweep time of spectrum analyzer to 500ms, measure the pulses number of the measurement time.

Test Result:

The test period: T= 0.4 Second/Channel x 80 Channel = 32s

1. **Channel 0:** 2.402GHz

The Average Occupany time = 0.590ms x (42/500ms x 32s) / 80 = 19.824ms

2. **Channel 39:** 2.441GHz

The Average Occupany time = 0.600ms x (42/500ms x 32s) / 80 = 20.160ms

3. **Channel 79:** 2.4835GHz

The Average Occupany time = 0.580ms x (42/500ms x 32s) / 80 = 19.488ms

The results are not be greater than 0.4 seconds.

The unit does meet the FCC requirements.

The graph as below, represents the emissions take for this device.

Channel 0: 2.402GHz

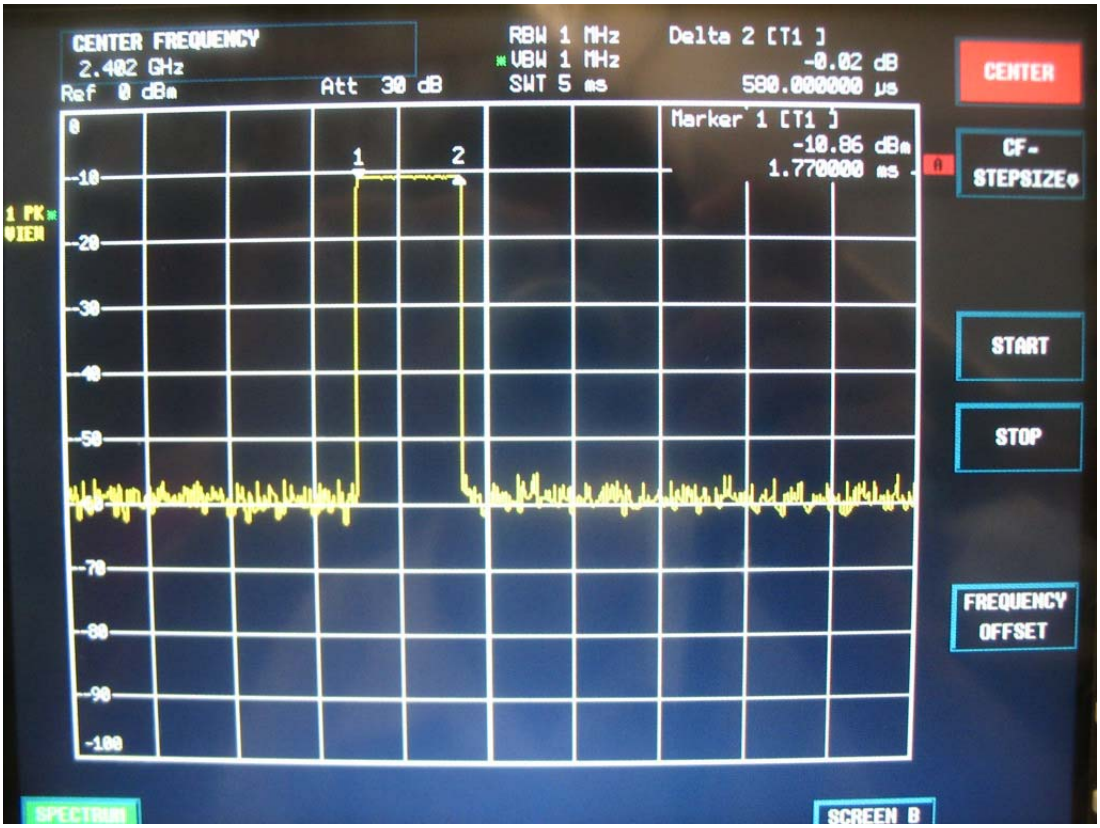

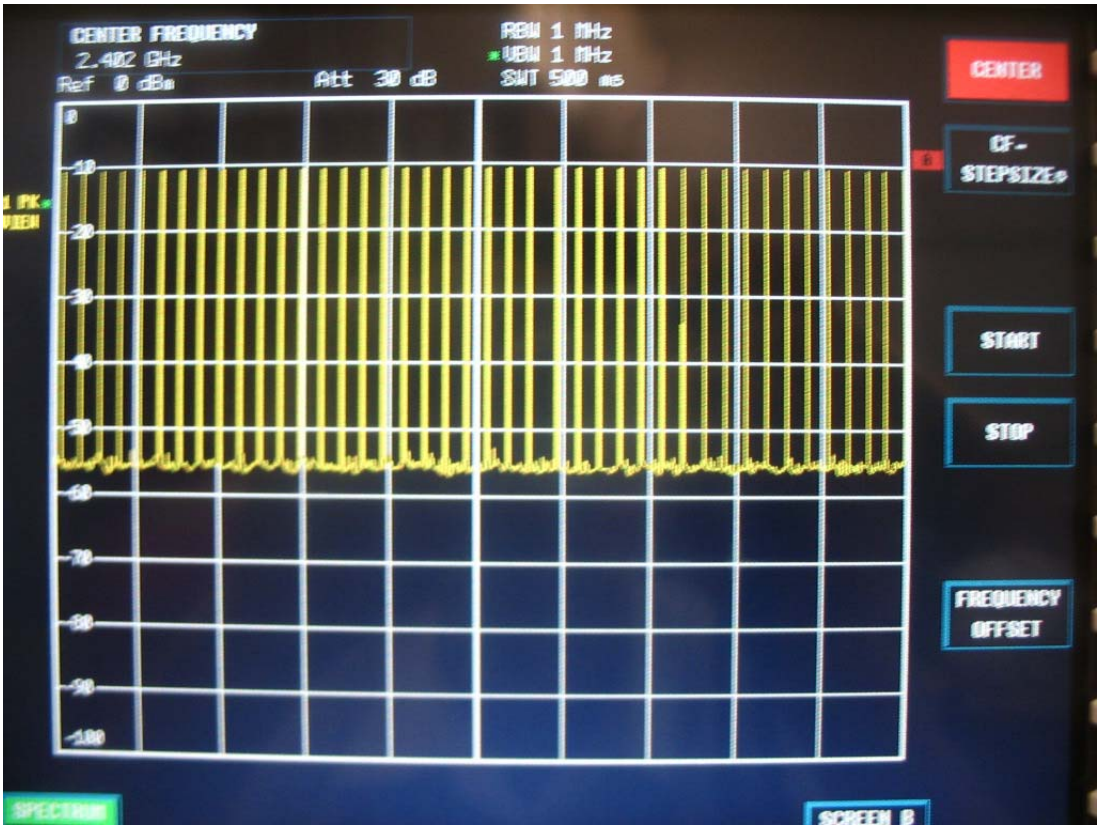

Channel 39: 2.441GHz

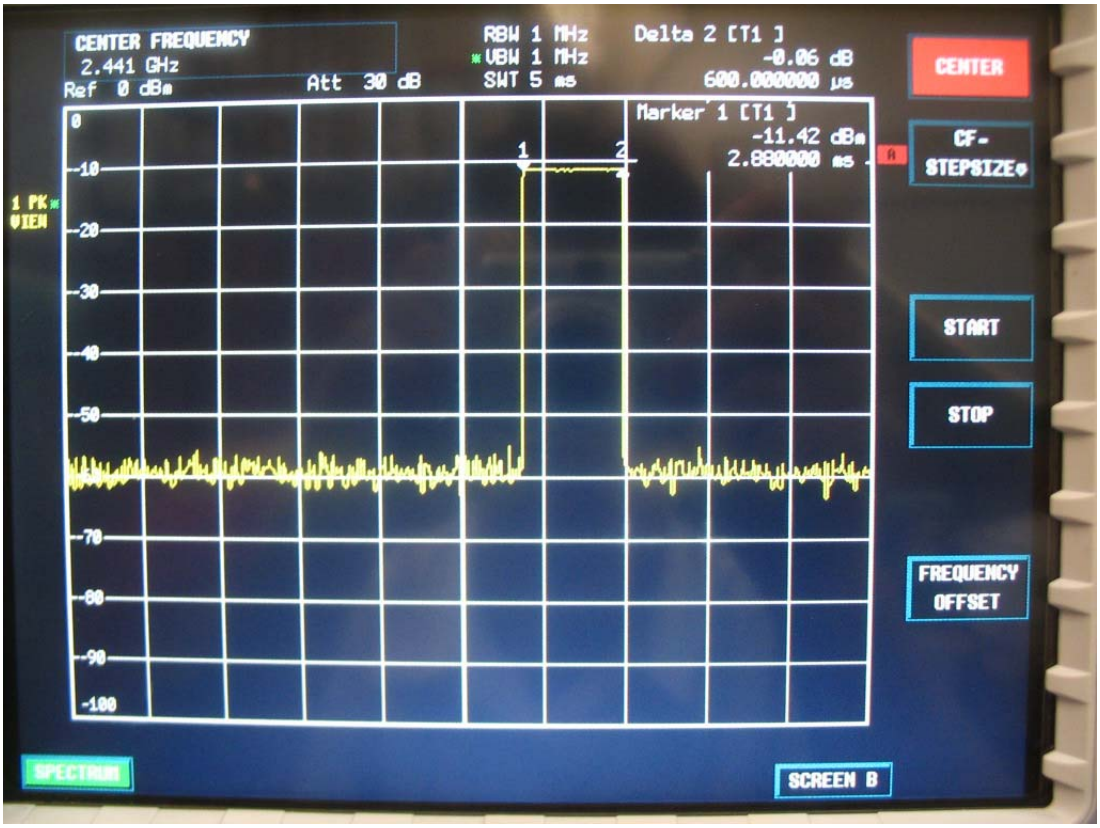

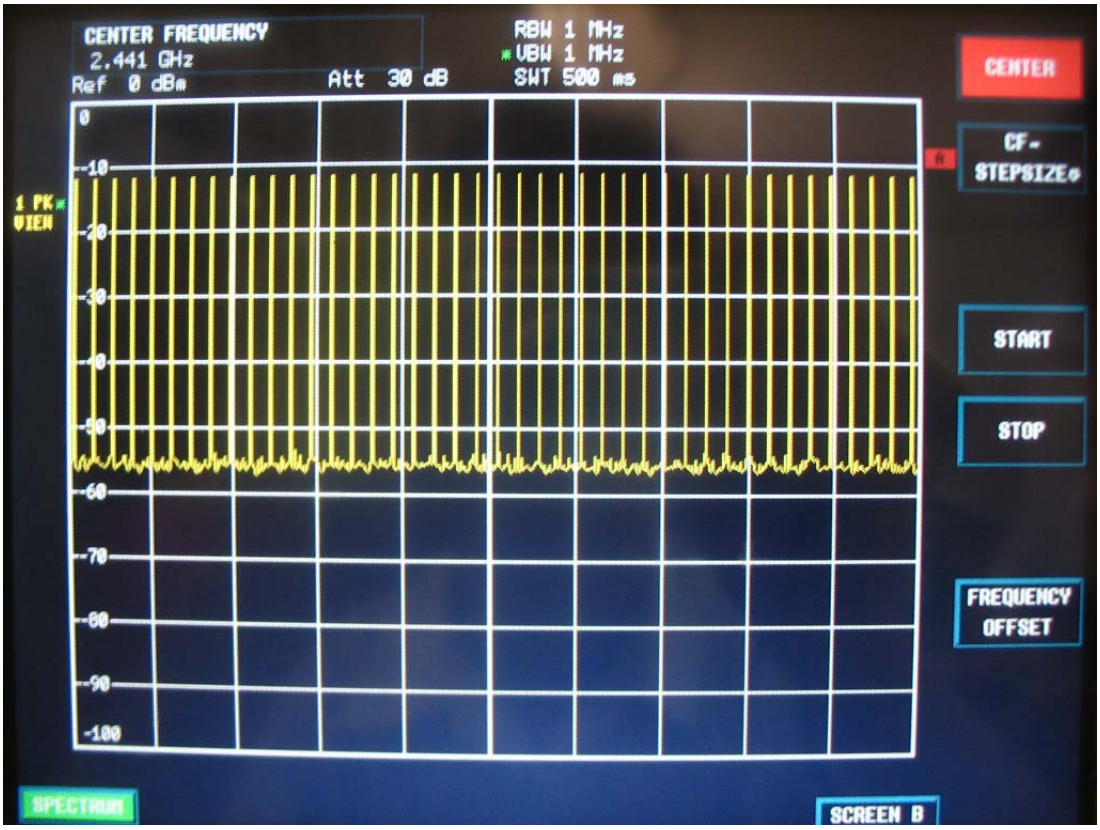

Channel 79: 2.481GHz

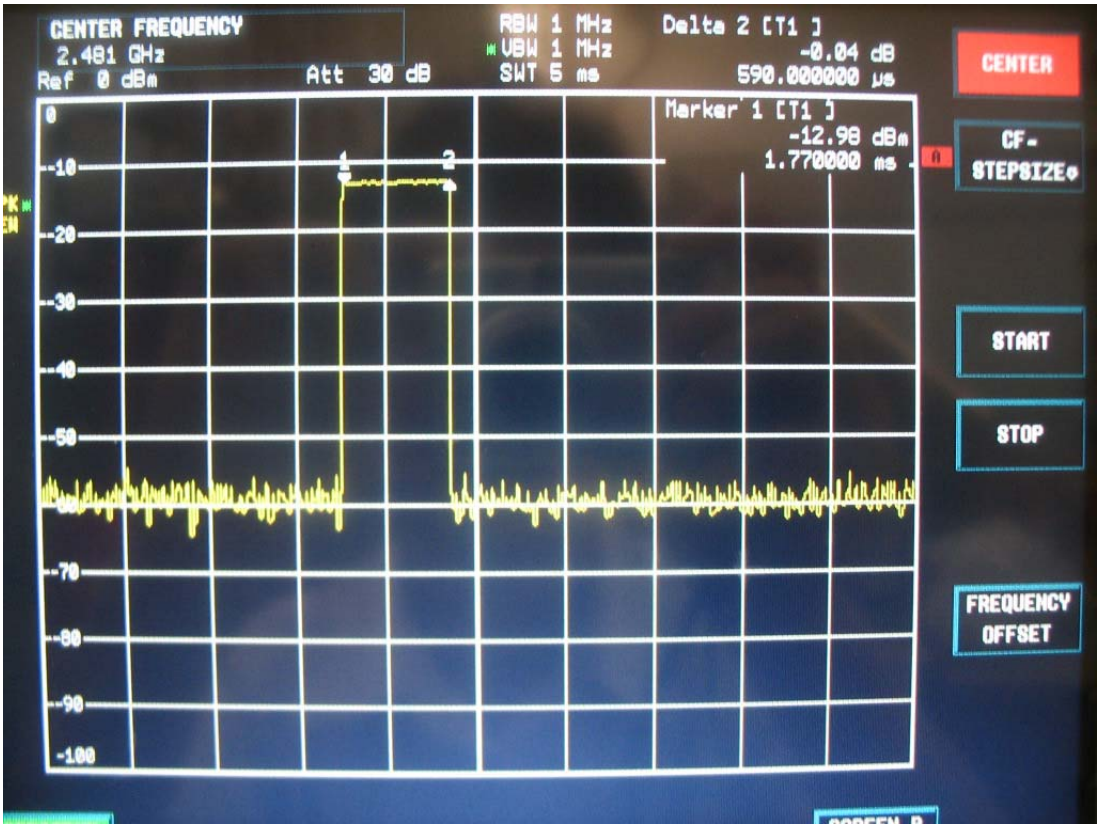

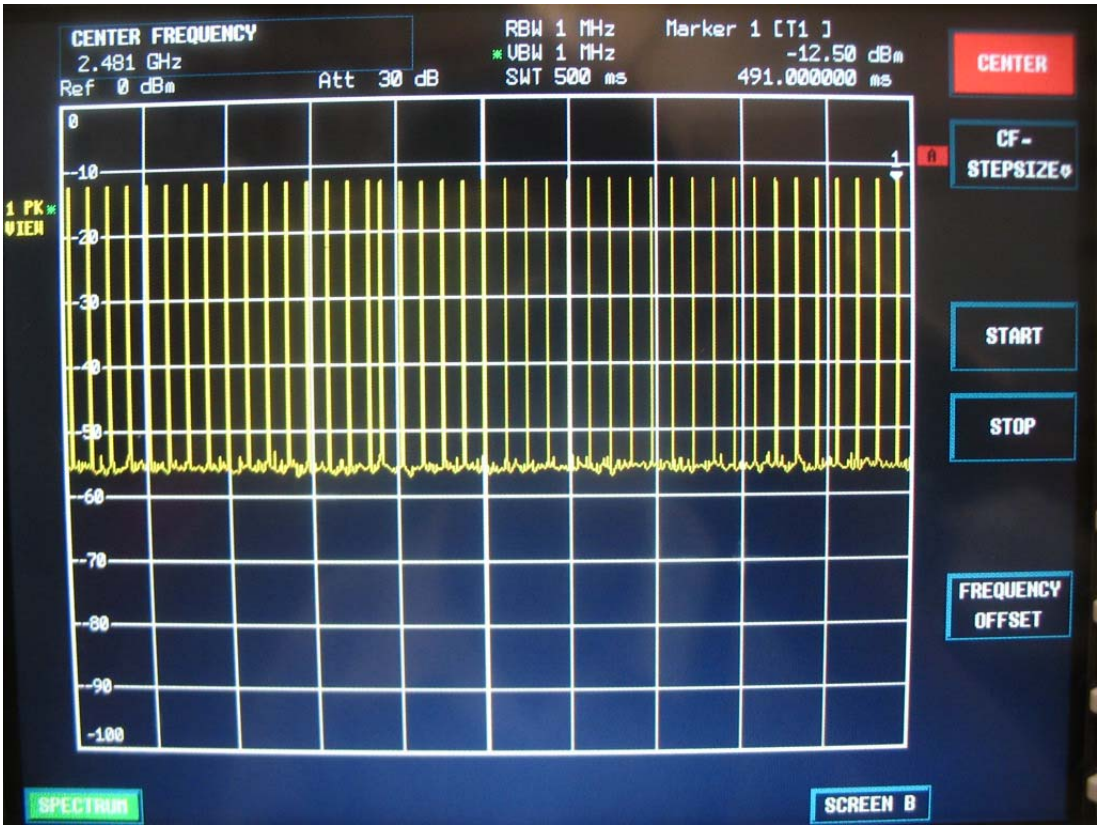

5.3.8 Power Spectral Density

Test Requirement: FCC Part15 C

Test Method: Base on ANSI 63.4..

Test Date: 18 September 2004

Requirements: **Regulation 15.247 (**d) For direct sequence systems, the peak power spectral density conducted from the intentional radiator to the antenna shall not be greater than 8 dBm in any 3 kHz band during any time interval of continuous transmission .

Test Procedures:

The tests below are running with the EUT transmitter set at high power mode .A PCMCIA port from a notebook computer to the EUT. The EUT is needed to force selection of output power level and channel number. While testing, EUT was set to transmit continuously. A horn antenna was connected with the spectrum analyzer.

The EUT is tested in Chamber. Put EUT on the middle of a wooden table. Set spectrum analyzer RBW = 3 KHz, VBW > RBW (e.g. VBW = 10 KHz), Span = 2 MHz. Turn around the table to find maximum emission.

1. Then set the Span = 300 KHz and sweep time = 100 sec. Peak the maximum emission again. Record the test field strength.
2. Calculate the transmitter's peak power using the following equation:
   Power= (E x d)squared / (30 x G)
   Where:E= the measured maximum field strength in V/m.
   Set the RBW > 6dB bandwidth of the emission or use a peak power meter..
   .G= the numeric gain of the transmitting antenna over an isotropic radiator.
   .d= the distance in meters from which the field strength was measured.
   .P= the power in watts is the final Maximum Peak Output Power .

The EUT was set transmitting continuously and force selection of output power level and channel number. We'd observed that the peak levels aren't greater than +8dBm limit.

Test Result:

Test Channel	Fundamental Frequency (GHz)	RF POWER LEVEL IN 3 KHz BW Filed Strength (dBuV/m)	Gain (dBi)	RF POWER LEVEL IN 3 KHz BW (dBm)	MAXIMUM Limit (dBm)	PASS/ FAIL
0	2.402	82.9	+2	-13.33	8.0	Pass
39	2.441	80.8	+2	-15.43	8.0	Pass
79	2.481	79.6	+2	-16.63	8.0	Pass

Remark: The manufacturer for the antenna gain specification is +2 dBi (if test in +2dB RF output power mode.)

The EUT meets the requirements of this section.