Meru Networks OAP832e

Installation Guide

882-70013

November 2014

Copyright © Meru Networks, Inc., 2003–2013. All rights reserved.
Other names and brands may be claimed as the property of other

MERU NETWORKS, INC.
Limited Product Warranty

This Limited Product Warranty applies to the original end-user customer of the Meru product which you purchased for your own use, and not for resale ("Product"), from Meru Networks, Inc. ("Meru") or its authorized reseller ("Reseller").

Limited Warranties

- One-year limited hardware warranty: Meru warrants to you that Meru hardware (other than Third Party Products as described below) will be free from defects in materials and workmanship for a one-year period after the date of delivery of the applicable product to you from Meru or its Reseller (the "Hardware Warranty Period"). If Meru receives written notice from you of such defects during the Hardware Warranty Period, Meru will, at its option, either repair or replace Meru hardware that Meru determines to be defective. Replacement products may be remanufactured units, and will be warranted for the remainder of the original Hardware Warranty Period, or if greater, for thirty days from delivery of such replacement. Should Meru be unable to repair or replace the Meru hardware, Meru (or its Reseller, as applicable) will refund to you the purchase price of the Product.
- 90-Day Limited Software Warranty: Meru warrants to you that, for a 90-day period after the date of delivery of the applicable product to you from Meru or its Reseller (the "Software Warranty Period"), when properly installed and used, (a) the media on which the Meru software is provided will be free from defects in materials or workmanship; and (b) the Meru software will substantially conform to the functional specifications in the applicable documentation. If Meru receives written notice from you of a breach of this warranty during the Software Warranty Period and is able to reproduce the defect, Meru will, at its option, either repair or replace the defective Meru software. Should Meru be unable to repair or replace the Meru software, Meru (or its Reseller, as applicable) will refund to you the purchase price of the Product.

Exclusions

The warranty on the Product shall not apply to defects resulting from the following:

- Alteration or modification of the Product in any way, including without limitation configuration with software or components other than those supplied by Meru or integration with parts other than those supplied by Meru.
- Abuse, damage or otherwise being subjected to problems caused by negligence or misapplication (including without limitation improper or inadequate maintenance or calibration), relocation of the products (including without limitation damage caused by use of other than Meru shipping containers), or use of the products other than as specified in the applicable Meru product documentation (including without limitation incompatible operating environments and systems), or improper site preparation or maintenance.
- Damage as a result of accidents, extreme power surge, extreme electromagnetic field, acts of nature or other causes beyond the control of Meru.
- Use of the Product with software, interfacing, parts or supplies not supplied by Meru.

The warranty on the Product does not apply if the Product is sold, or in the case of software, licensed, for free for evaluation or demonstration purposes.

Meru expressly disclaims any warranty or obligation to support the Product for all operating environments – for example, as illustration and not limitation, Meru does not warrant or ensure interoperability of the Product with future telecommunication systems or other future software or hardware.

You understand and acknowledge that the Products may generate, use or radiate radio frequency energy and may interfere with radio communications and/or radio and television receptions if is not used and/or installed in accordance with the documentation for such products. WHILE MERU USES COMMERCIALLY REASONABLE EFFORTS TO ENSURE COMPLIANCE OF THE PRODUCTS WITH APPLICABLE UNITED STATES FEDERAL COMMUNICATIONS COMMISSION AND PROTECT AGAINST HARMFUL INTERFERENCES, YOU ACKNOWLEDGE AND AGREE THAT INTERFERENCES WITH RADIO COMMUNICATIONS AND/OR RADIO AND TELEVISION RECEPTIONS MAY OCCUR AND THAT MERU WILL NOT BE LIABLE FOR ANY DAMAGES OR INCONVENIENCE BASED ON SUCH INTERFERENCES.

Third Party Products - The above Limited Warranties are exclusive of products manufactured by third parties (“Third Party Products”). If such third party manufacturer provides a separate warranty with respect to the Third Party Product, Meru will include such warranty in the packaging of the Meru Product.

Return procedures

To obtain warranty service you must: (a) obtain a return materials authorization number (“RMA#”) from Meru by contacting rmaadmin@merunetworks.com, and (b) deliver the Product, in accordance with the instructions provided by Meru, along with proof of purchase in the form of a copy of the bill of sale including the Product’s serial number, contact information, RMA# and detailed description of the defect, in either its original package or packaging providing the Product with a degree of protection equivalent to that of the original packaging, to Meru

at the address below. You agree to obtain adequate insurance to cover loss or damage to the Product during shipment.

If you obtain an RMA# and return the defective Product as described above, Meru will pay the cost of returning the Product to Meru. Otherwise, you agree to bear such cost, and prior to receipt by Meru, you assume risk of any loss or damage to the Product. Meru is responsible for the cost of return shipment to you if the Meru Product is defective.

Returned products which are found by Meru to be not defective, returned out-of-warranty or otherwise ineligible for warranty service will be repaired or replaced at Meru's standard charges and shipped back to you at your expense.

At Meru's sole option, Meru may perform repair service on the Product at your facility, and you agree to provide Meru with all reasonable access to such facility and the Product, as required by Meru. On-site repair service may be available and is governed by the specific terms of your purchase.

All replaced parts, whether under warranty or not, are the property of Meru.

Warranty limitations

THE WARRANTIES SET FORTH ABOVE ARE EXCLUSIVE AND NO OTHER WARRANTY, WHETHER WRITTEN OR ORAL, IS EXPRESSED OR IMPLIED BY MERU, TO THE MAXIMUM EXTENT PERMITTED BY LAW. THERE ARE NO OTHER WARRANTIES RESPECTING THE PRODUCT AND DOCUMENTATION AND SERVICES PROVIDED UNDER THIS AGREEMENT, INCLUDING WITHOUT LIMITATION ANY WARRANTY OF DESIGN, MERCHANTABILITY, FITNESS FOR A PARTICULAR PURPOSE (EVEN IF MERU HAS BEEN INFORMED OF SUCH PURPOSE), TITLE OR AGAINST INFRINGEMENT OF THIRD PARTY RIGHTS. IF ANY IMPLIED WARRANTY CANNOT BE DISCLAIMED UNDER APPLICABLE LAW, THEN SUCH IMPLIED WARRANTY SHALL BE LIMITED IN DURATION TO THE HARDWARE AND SOFTWARE WARRANTY PERIODS DESCRIBED ABOVE.

NO AGENT OF MERU IS AUTHORIZED TO ALTER OR EXCEED THE WARRANTY OBLIGATIONS OF MERU.

MERU SPECIFICALLY DOES NOT WARRANT THAT THE MERU SOFTWARE WILL BE ERROR FREE OR OPERATE WITHOUT INTERRUPTION.

THE REMEDIES IN THIS LIMITED PRODUCT WARRANTY ARE YOUR SOLE AND EXCLUSIVE REMEDIES, AND MERU'S SOLE AND EXCLUSIVE LIABILITY, FOR BREACH OF THE HARDWARE OR SOFTWARE WARRANTY SET FORTH ABOVE.

Limitations of Liability

You acknowledge and agree that the consideration which you paid to Meru does not include any consideration by Meru of the risk of consequential, indirect or incidental damages which may arise in connection with your use of, or inability to use, the Product. THUS, MERU AND ITS RESELLER WILL NOT BE LIABLE FOR ANY INDIRECT, INCIDENTAL, SPECIAL, PUNITIVE OR CONSEQUENTIAL DAMAGES, INCLUDING WITHOUT LIMITATION LOST PROFITS, LOST BUSINESS, LOST DATA, LOSS OF USE, OR COST OF COVER INCURRED BY YOU ARISING OUT OF OR RELATED TO YOUR PURCHASE OR USE OF, OR INABILITY TO USE, THIS PRODUCT OR THE SERVICES, UNDER ANY THEORY OF LIABILITY, WHETHER IN AN ACTION IN CONTRACT, STRICT LIABILITY, TORT (INCLUDING NEGLIGENCE) OR OTHER LEGAL OR EQUITABLE THEORY, EVEN IF MERU OR ITS RESELLER KNEW OR SHOULD HAVE KNOWN OF THE POSSIBILITY OF SUCH DAMAGES. IN ANY EVENT, THE CUMULATIVE LIABILITY OF MERU OR ITS RESELLER FOR ALL CLAIMS WHATSOEVER RELATED TO THE PRODUCT OR THE SERVICE WILL NOT EXCEED THE PRICE YOU PAID FOR THE PRODUCT OR SERVICES GIVING RISE TO SUCH CLAIMS.

THE LIMITATIONS SET FORTH HEREIN ARE INTENDED TO LIMIT THE LIABILITY OF MERU AND ITS RESELLERS AND SHALL APPLY NOTWITHSTANDING ANY FAILURE OF ESSENTIAL PURPOSE OF ANY LIMITED REMEDY.

The jurisdiction applicable to you may not allow the limitations of liability or damages set forth above, in which case such limitation shall only apply to you to the extent permitted in such jurisdiction.

Additional Information

This Limited Product Warranty shall be governed by and construed in accordance with the laws of the State of California, U.S.A., exclusive of its conflict of laws principles. The U.N. Convention on Contracts for the International Sale of Goods shall not apply.

This Limited Product Warranty is the entire and exclusive agreement between you and Meru with respect to its subject matter, and any modification or waiver of any provision of this statement is not effective unless expressly set forth in writing by an authorized representative of Meru.

All inquiries or claims made under this Limited Product Warranty must be sent to Meru at the following address:

Meru Networks Inc.,
894 Ross Drive, CA 94087, USA
Tel: 408-215-5300
Fax: 408-215-5301
Email: support@merunetworks.com

Table of Contents

About OAP832e 1

IEEE Std 802.11ac in OAP832e 1

Installation Location 2

Safety Precautions 2

Power Requirements. 2

. . . . . Power Output, PoE (Power over Ethernet) PSE3

Installing OAP832e 5

Power Requirements 5

Assembling the Waterproof Ethernet Connector. 5

Installing the Access Point 6

Selecting a Location 6

Radio Position Planning 7

Radio Interference 7

Weather Conditions 7

Ethernet Cabling 8

Grounding 8

Test Basic Link Operation 9

Mounting the Access Point 9

Before You Begin 10

Package Contents 10
Power Options 10
OAP832e Antennas 11
Radio-Antenna-Port Mappings 11
Attaching Antennas 11
Mounting OAP832e on a Pole. 12
Mounting OAP832e on a Wall. 15
Check OAP832e LED Activity. 16
Change LED Appearance 17
Where to Go From Here 17
Approved Antennas. 19
Regulatory Information 21
Regulatory Specifications 22
Declaration of Conformity, Federal Communication Commission 22
Manufacturer Information. 22
Declaration of Conformity 23
Declaration of Conformity, Industry Canada 24
Manufacturer Information. 24
Declaration of Conformity 24
Declaration of Conformity, R&TTE Directive 1999/5/EC. 26
Declaration of Conformity 26
VCCI Statement 29
General Information of RF Exposure 29
International Guidelines. 29

FCC Guidelines 30
Industry Canada Guidelines 31

Additional Notes 33
Maximum EIRP 33
Manufacturing Information 33
Distributed Antenna Systems (DAS) 33
Air Handling Space Requirements 34
Frequencies Blocked for Regulatory Compliance 34
Underwriters Laboratories 34
Restriction of Hazardous Substances 34
European Community 34
China 35

Cautions and Warnings 37
Cautions 37
Warnings 39

1 About OAP832e

The OAP832e Access Point is a dual radio, and single band 3x3 3-stream 802.11ac access point designed for data, voice, and video applications in enterprise class deployments.

Features

- Supported by System Director versions 6.0 and greater.
- Supports 80-MHz channel-bonding (VHT80) in 5.x GHz band with IEEE Std 802.11ac. 80-MHz channel-bonding (VHT80) combines four 20-MHz channels into a single 80-MHz channels for increasing bandwidth.
- Supports Plug and Play deployment.
- Supports multi-layered security including Enterprise WPA2 features such as automatic traffic inspection.
- Powered by either a standard IEEE 802.3at or 4-pair IEEE 802.3at PoE switches or PoE injectors.
- Supports channel span architecture that requires no channel planning or configuration.
- Supports wired stations via the secondary Ethernet interface.
- Provides pre-pack PHY data rate up to 1.3 Gbps per radio at IEEE Std 802.11ac with MCS9/QAM-256 mode.

IEEE Std 802.11ac in OAP832e

The OAP832e series is capable of operating in the IEEE Std 802.11ac mode, which is capable for theoretical throughput rates up to 1.3 Gbps per radio. IEEE Std 802.11ac is applied only on the 5 GHz band, and its higher throughput levels require the use of 80 MHz wide channels. When a radio on OAP832e is configured for IEEE Std 802.11ac operation, it is automatically set to operate on the 5 GHz band. By default, the radio 1 is set to operate on the 2.4 GHz band (Channel 6, 20 MHz channel width) to support IEEE Std 802.11b/g/n clients and radio 2 is configured for IEEE Std 802.11ac on 5 GHz (Primary Channel 36 with 80 MHz channel width).

With backward compatibility, OAP832e's Radio 2 supports either IEEE 802.11a or IEEE 802.11a/n clients.

Installation Location

OAP832e supports wall and pole mounts. OAP832e should be mounted in a location that meets the following conditions:

- ***Unobstructed access to stations*** - - relatively unobstructed access to the stations the AP serves. Select a location with minimal physical obstructions between the AP and the wireless stations.
- ***Access to power*** - access to a Power over Ethernet (PoE) connection to the network switch servicing the controller.
- ***Capacity Planning*** - OAP832e is capable of associating up to 128 clients per radio or 256 clients per system. For optimum performance, Meru Networks recommend planning up to 50 clients per radio for a mixed WLAN voice, video, and data. Users can, however, achieve higher client capacity in a data traffic only environment. Refer to the Meru Deployment Guides on the support site for more information.
- Place APs about 80 feet apart.
- Do not install APs near metal objects, such as heating ducts, metal doors, or electric service panels.
- If you install an OAP832e on a pole, its coverage will be a half spherical shape. Mounting two OAP832e's (back to back) on a poll does not provide full coverage (spherical shape). This could potentially interfere with each other resulting in poor coverage

Safety Precautions

IMPORTANT—Read and follow the regulatory instructions in Appendix B before installing and operating this product.

This product is intended to be supplied by an 802.3at or 4-pair 802.3at Power over Ethernet connection only.

Power Requirements

- Power Input, PoE (Power over Ethernet) PD complies with 802.3at or 4-pair 802.3at.

- The PoE PD IN design complies with IEEE802.3-2012 Clause 33.3 Powered Devices and Clause 33.4 applicable to PD and Annex 33A.2. The PoE is designed as a Class 4 PD.

Power Output, PoE (Power over Ethernet) PSE

- Supports PoE PSE Out upto 15.4W.
- Complies with IEEE802.3-2012 Clause 33.2 Power Sourcing Equipment and Clause 33.4 applicable to PSE and Annex 33A.1.

2 Installing OAP832e

In addition to the hardware supplied by Meru Networks, you will need the following:

- Antennas (sold separately)
- RF coaxial cable to connect the antennas to the OAP832e
- Drill (if wall-mounting)
- Crescent wrench
- Outdoor CAT5 Ethernet cable—Cable type CMX
  - Size 22 (American Wire Gauge) with a 3.8mm gap
  - Size 24 (AWG) with a 3mm gap

NOTE: The Ethernet cable must be run through the OAP832e's water-tight input port, which is provided in the package. This will ensure a waterproof seal around the connection. Follow the instructions listed later in this chapter to properly install the cable.

Power Requirements

The OAP832e does not ship with a power adapter, and as such, must be powered by a PoE device. In order to ensure that both radios on the AP are active, it must be plugged into an 802.3at power source. In order to ensure that both radios on the AP are active and PSE OUT is supplying power, it must be plugged into a 4-pair 802.3at power source.

Assembling the Waterproof Ethernet Connector

The OAP832e ships with two separate Ethernet connectors that must be disassembled in order to run a cable through it. Once tightened and connected to the AP itself, these connectors will ensure a waterproof seal for the AP.

To run an Ethernet cable through the waterproof connector:

1. Unscrew the two main components of the connector.
2. Remove the insert from the larger portion of the connector. This should be a rubber casing surrounded by a plastic shell. Both the plastic shell and the rubber casing should have a slit along one side, allowing them to be opened up in order to insert the cable.
3. Prior to attaching the rubber casing to the cable, run the cable through the smaller portion of the original two-part enclosure. Be sure to run the cable through the smaller opening (at the top of the plastic component) so that the head of the cable goes towards the AP. (Note that this step can be done after the rest of the connector has been assembled, but it can be difficult to do so when deploying long cables, so it's best to do it here instead.)
4. Run the Ethernet cable through the slit in the rubber casing and ensure that the casing wraps firmly around the cable. The Ethernet connector at the end of the cable should be on the larger side of the rubber casing.
5. Replace the larger plastic component (the one that has threading on both ends) such that it fits around the rubber casing with the plastic shell. The portion of the component with a large rubber washer should be facing the end of the Ethernet cable (which will be connected to the AP).
6. Connect the Ethernet cable to the port on the AP and screw the plastic threading in place. This should be tightened firmly, but should not require excessive force.
7. Finally, screw the last plastic portion to the top of the threading. Again, tighten this firmly, but not excessively. The gap between the top cap and the base of the threading component should be 3mm when using a 24AWG cable or 3.8mm when using a 22AWG cable.

Now that the Ethernet cable connection has been fully assembled, the AP is ready to be deployed.

Installing the Access Point

Selecting a Location

When you plan the OAP832e physical configuration, include the elements shown in Figure 1 on ***page 7***

Figure 1: Sample Physical Layout

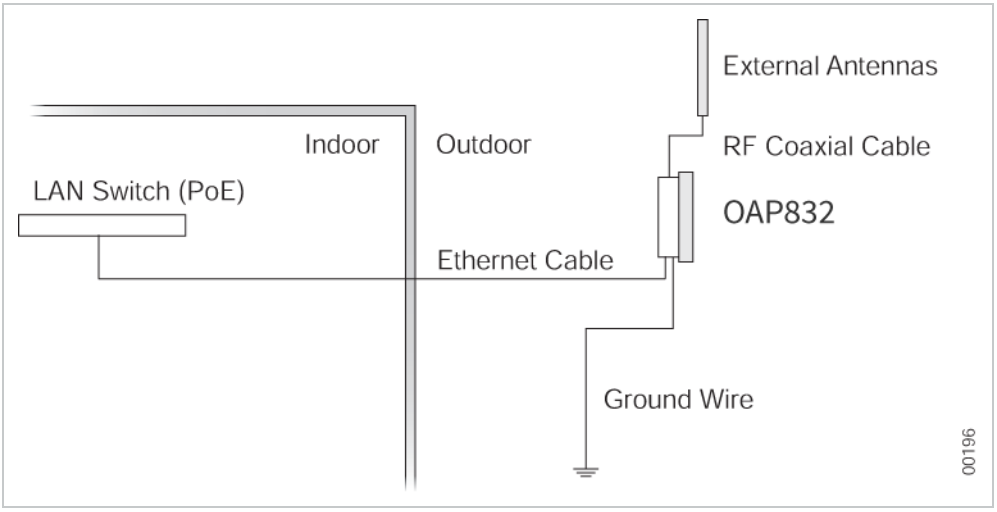

Radio Position Planning

Never construct a radio mast, pole, or tower near overhead power lines. In addition, local regulations may limit or prevent construction of a high radio mast or tower. If your OAP832e link requires a high radio mast or tower, consult a professional contractor for advice. Once the required antenna height has been determined, other factors affecting the precise position of the OAP832e must be considered.

- Be sure there are no other radio antennas within 2 m (6 ft.) of the OAP832e.
- Place the OAP832e away from power and telephone lines.
- Avoid placing the OAP832e too close to any metallic, reflective surfaces, such as roof-installed air-conditioning equipment, tinted windows, wire fences, or water pipes.

Radio Interference

Avoiding radio interference is an important part of wireless planning. Interference is caused by other radio transmissions using the same or an adjacent channel frequency. You should first scan your proposed site using a spectrum analyzer to determine if there are any strong radio signals using the 2.4 or 5 GHz spectrum. Always use a channel frequency that is furthest away from another signal on the spectrum.

Weather Conditions

Take into account any extreme weather conditions that are known to affect your location. Consider these factors:

- Temperature - The OAP832e is tested for normal operation in temperatures from -40F to 149F. Operating in temperatures outside of this range may cause the unit to fail.
- Wind Velocity - The OAP832e can survive in winds up to 165 mph. You must consider the known maximum wind velocity and direction at the site and be sure that any supporting structure, such as a pole, mast, or tower, is built to withstand this force.
- Lightning - You should make sure that the unit, any supporting structure, and cables are all properly grounded. Additional protection using lightning rods, lightning arrestors, or surge suppressors may also be employed in order to protect against lightning strikes on the antennas. Contact Meru Sales for more information regarding this equipment.
- Rain - The OAP832e is weatherproofed against rain. Also, prolonged heavy rain has no significant effect on the radio signal. However, it is recommended to apply weatherproof sealing tape around the Ethernet port and antenna connectors for extra protection. If moisture enters a connector, it may cause a degradation in performance or even a complete failure of the link.
- Snow and Ice - Falling snow, like rain, has no significant effect on the radio signal. However, a build up of snow or ice on antennas may cause the link to fail.In this case, the snow or ice has to be cleared from the antennas to restore operation of the link.

Ethernet Cabling

When a suitable antenna location has been determined, plan a cable route from the OAP832e outdoors to the PoE-enabled controller indoors. Consider these points:

- The Ethernet cable length should never be longer than 100 m.
- Determine a building entry point for the cable.
- Determine if conduits, bracing, or other structures are required for safety or protection of the cable.
- For lightning protection at the controller end of the cable, consider using a lightning arrestor immediately before the cable enters the building.
- The shield of the Ethernet cable needs to be grounded at the lightning arrestor. If, by design, the lightning arrestor cannot provide this ground, the shield of the Ethernet cable will need to be grounded by the installer.

Grounding

It is important that the OAP832e, cables, and any supporting structures are properly grounded. The OAP832e unit includes a grounding screw to attach a ground wire. See Figure 2 on ***page 9*** for grounding screw locations. Be sure that grounding is available and that it meets local and national electrical codes.

Figure 2: OAP832e Grounding Holes

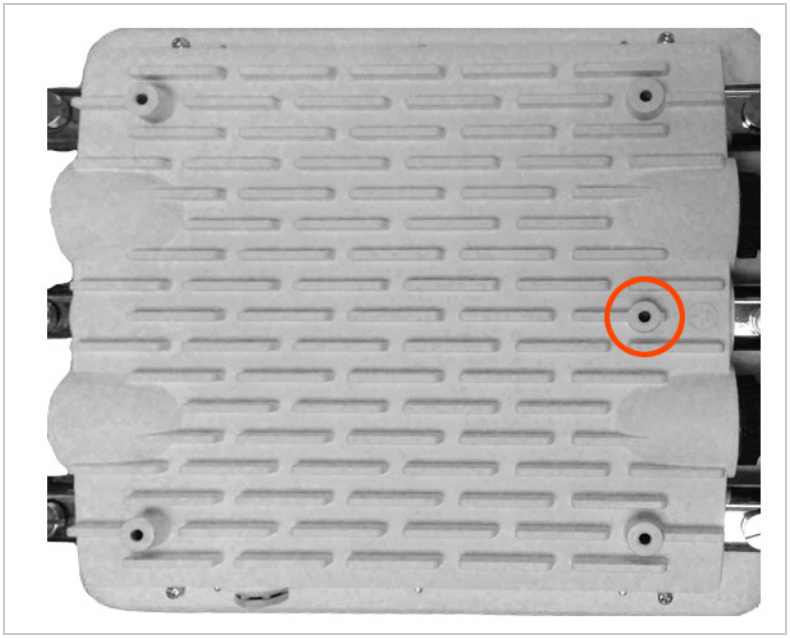

Test Basic Link Operation

Prior to deploying the AP, it is recommended that users connect it to an existing Meru deployment in order to ensure basic functionality. This can be done indoors in a controlled setting, prior to going through the trouble of mounting it externally. To do so, simply connect the AP to an existing controller and verify that the controller recognizes it. If so, proceed with the following section in order to deploy the AP.

Mounting the Access Point

The OAP832e can be mounted on the following (brackets are included):

- 1.3” to 16” diameter round pole or 1.3” to 16” wide square pole
- Wall

This chapter provides all the information that users need to install Meru OAP832e. After user completing installation procedure, see the Meru System Director Configuration guide for detailed instructions on the various configuration options.

Follow all safety precautions mentioned in the “Safety Precautions” ***on page 2*** section.

Before You Begin

This section provides information that users should know before installing OAP832e.

Package Contents

The OAP832e shipping package should contain the following.

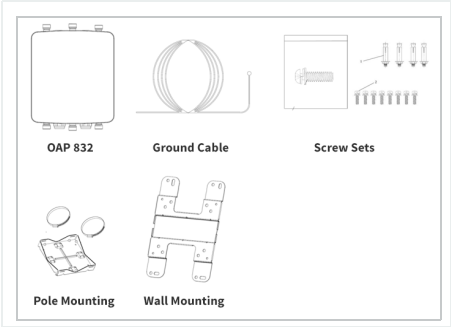

Power Options

A power source is needed to power the OAP832e. The OAP832e requires either IEEE Std 802.3at or 4-pair IEEE Std 802.3at compatible external Power-over-Ethernet (PoE) switch or PoE injector.

OAP832e Antennas

Radio-Antenna-Port Mappings

TABLE 1: Radio-Antenna-Port Mappings

Antenna Port	Radio / Channel
A1	Radio 1
A2	Radio 1
A3	Radio 1
A4	Radio 2
A5	Radio 2
A6	Radio 2

Attaching Antennas

An OAP832e has six external antenna ports. Do not leave any antenna connector open.All connectors on the AP must be terminated either with antennas or with 50 ohm N-type terminators.Antennas attached to a specific radio in OAP832e must all be of the same model. http://www.merunetworks.com/merusupport.

Antennas attached to a specific radio in OAP832e must all be of the same model. In case of replacement, user must replace all the antennas.

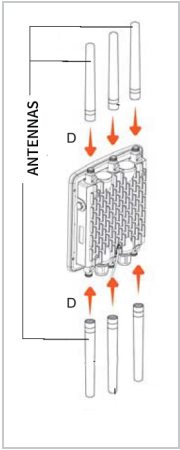

Mounting OAP832e on a Pole

OAP832e can be pole mounted horizontally or vertically.

Vertical Mounting	Horizontal Mounting
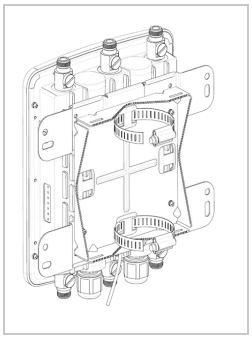	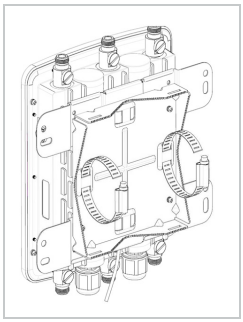

1. Place the lock and fat washer on the cap screws and drive the screws to attach the mounting base to the back of the Access Point.

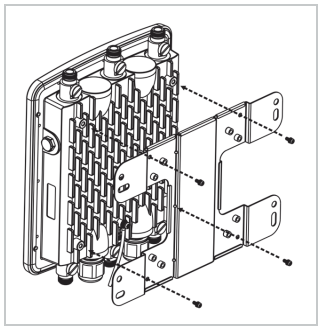

2. Use the suitable sides of the pole mount bracket to mount AP on the pole. The narrow-V sides are for round pole 1.3 to 3 inch in diameter and for square pole 1.3 to 3 inch in width. The wider-V sides are for round pole 3 to 16 inch in diameter and for square pole 3 to 16 inch in width.

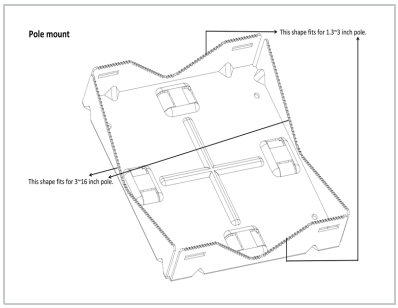

3. Determine which mounting, vertical or horizontal to be assembled. Drive the four round head screws to attach the Pole Mount Bracket to the mounting base.

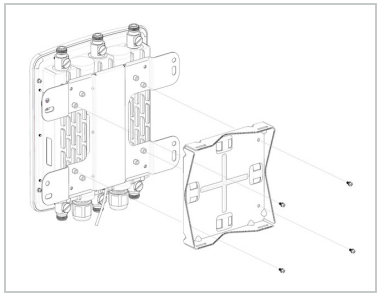

4. The following figure illustrates the rear section of the bracket that has the tab for pole clamp and slots for pole strap.

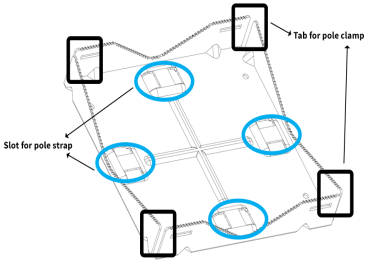

5. For round pole larger than 5.91 inch (150mm) in diameter, thread the open end of the pole strap through the two side slots and the tab on the bottom of bracket and for square pole wider than 6.06 inch (154mm), thread the pole strap through the two side slots only and not through the tab on the bottom of the bracket. For smaller poles, thread the open end of the pole strap through the tab on the bottom of bracket.

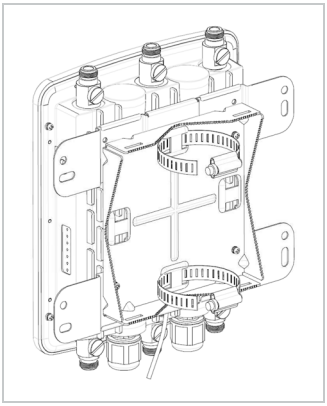

The figures below show OAP832e mounted on smaller poles.

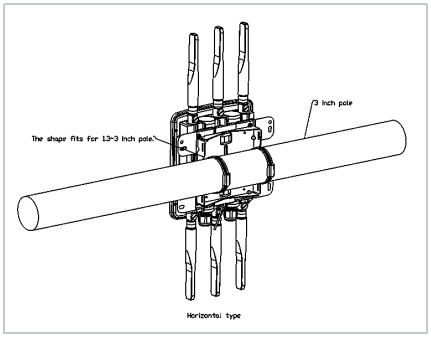

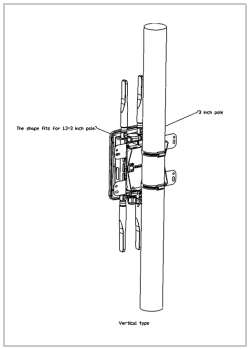

The figures below show OAP832e mounted on larger poles.

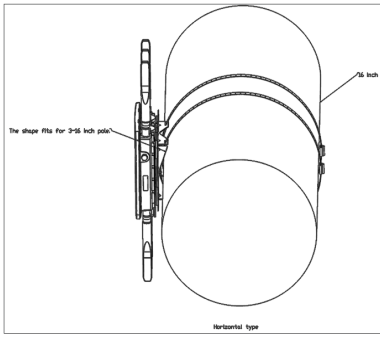

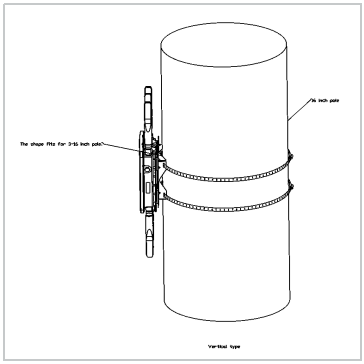

Mounting OAP832e on a Wall

1. Determine where the AP is to be placed and mark location on the surface for the four mounting holes. You may adjust the position with a level. Use the appropriate drill bit to drill four 8mm diagram and 37mm depth holes in the markings and hammer the bolts into the openings.

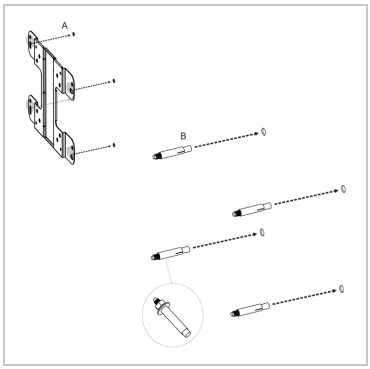

2. Place the lock and fat washer on the round head screws and drive the screws to attach mounting base to the back of the Access Point.

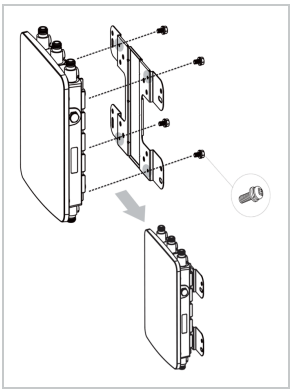

3. Attach the device onto the wall by tightening the bolts fat washers and nuts to secure the mounting base to the mounting surface.

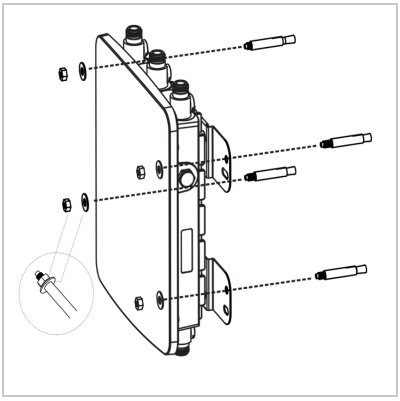

Check OAP832e LED Activity

When OAP832e first connects to the controller (and any time the access point is rebooted), the AP initializes and is then programmed by the controller. When the AP first powers up, all LEDs are green as in Figure 3 on ***page 16***.

Figure 3: OAP832e Status LEDs

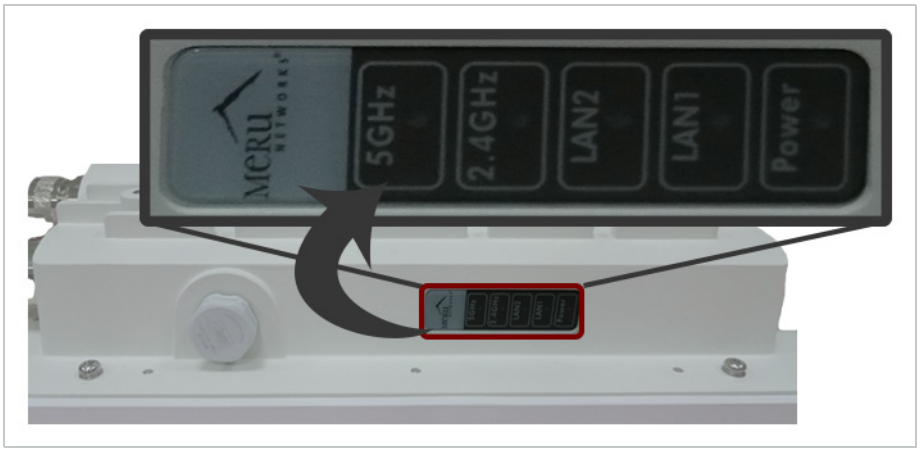

After the OAP832e is connected, check the status of the LEDs. The functions of the LEDs are described below.

TABLE 2: LED Descriptions

LED	COLOR	DESCRIPTION	TROUBLESHOOTING
POWER	RED / GREEN	TBD	
LAN 1	GREEN	ON - Link Up OFF - Link Down	If the status LED is blinking red and yellow, there is an alarm on the AP. Determine what the alarm is by clicking **Monitor > Dashboard > Alarms** and looking at the AP alarms. You can also use the CLI commands **show alarm** and **show log**.
LAN 2	GREEN	ON - Link Up OFF - Link Down	
2.4 GHz	GREEN	ON - Link Up OFF - Link Down	
5 GHz	GREEN	ON - Link Up OFF - Link Down	

Change LED Appearance

If you want to change the appearance of the LEDS, follow these steps:

1. From the controller, click **Configuration > Devices > AP**, and then select the AP.
2. Select one of these settings for the LED Mode setting:
   - **Normal:** LEDs are as described above
   - **Blink:** Sets all LEDs flashing; this is useful to locate an AP
   - **Dark:** Turns off all LEDs
3. Click **OK**.

Where to Go From Here

Now that the OAP832e is installed, refer to the Meru System Director Getting Started Guide for instructions on initializing the hardware. Return to this chapter to check the status of the LEDs once the WLAN is operational.

3 Approved Antennas

Only approved antennas may be used in conjunction with OAP832e access points. Access Points have been designed to operate with the antennas listed below. Antennas not included in this list are strictly prohibited for use with these devices.

TABLE 3:

Antenna Type	Meru Model Number	Gain (dBi)		Beam Width (degree)		Dimensions
		2.4Ghz	5 Ghz	Horizontal	Vertical	
Outdoor Dual band Omni directional Antenna	ANT-O6ABGN-0606-O	6.0	6.0	360°	40°	Diameter=6" Height=7.1"
Wall mount Patch Antenna	ANT-O6ABGN-0607-PT	6.0	7.0	72° @ 2.4GHz and 82° at 5.0GHz	60° @ 2.4GHz and 75° at 5.0GHz	17.5 x 6.1 x 1.0 inches
Directional MIMO Panel Antenna	ANT-O6ABGN-1211-PA	12.5	11.5	27° @ 2.4GHz and 30° at 5.0GHz	48° @ 2.4GHz and 40° at 5.0GHz	14.5 x 14.5 x 1.75 inches
Outdoor Omni Directional Antenna	ANT-BG080-NM	8.0	360°	15°	Diame-ter=0.825" Height=20"	
Outdoor Omni Directional Antenna	ANT-BG080-NM1		8.0 (5.15-5.35 GHz)	360°	12°	Diame-ter=0.86" length=12.67"
Outdoor Omni Directional Antenna	ANT-BG080-NM2		8.0 (5.47-5.85 GHz)	360°	12°	Diame-ter=0.86" length=12.67"

TABLE 3:

Antenna Type	Meru Model Number	Gain (dBi)		Beam Width (degree)		Dimensions
		2.4Ghz	5 Ghz	Horizontal	Vertical	
Outdoor Rubber Duck Antenna	ANT-01BGN-05-O	5.0		360°	40°	TBD
Outdoor Rubber Duck Antenna	ANT-01ANA-07-O	7.0		360°	40°	TBD

A Regulatory Information

The Meru Access Point (APs) must be installed and used in strict accordance with the manufacturer's instructions as described in the user documentation that comes with the product. For country-specific approvals, see below. Meru Networks, Inc. is not responsible for any radio or television interference caused by unauthorized modification of APs, or the substitution or attachment of connecting cables and equipment other than that specified by Meru Networks, Inc. The correction of interference caused by such unauthorized modification, substitution or attachment is the responsibility of the user. Meru Networks, Inc. and its authorized resellers or distributors are not liable for any damage or violation of government regulations that may arise from the user failing to comply with these guidelines.

Regulatory Specifications

TABLE 4: Regulatory Specifications

Category	Items
Safety	• UL 60950-1 • CSA C22.2 • EN 60950-1 • IEC 60950-1
Unintentional Radiation Compliance	• FCC Part 15.107 - 47CFR15.107 • FCC Part 15.109 - 47CFR15.109 B • ICES-003 Class B • EN 301 489-1 • EN 301 489-17 • EN55022 Class B • EN55024/AS/NZS CISPR 24 • VCCI Class B
Intentional Radiation Compliance	• FCC Part 15.247 - 47 CFR Ch. I • FCC Part 15.407 - 47 CFR15.407 • RSS-210 • EN 300 328 • EN 301 893 • Japan Radio (Ninsho)

Declaration of Conformity, Federal Communication Commission

Manufacturer Information

Meru Networks, Inc
894 Ross drive,

Sunnyvale, CA 94089
USA

Declaration of Conformity

This device complies with Part 15 rules. Operation is subject to the following two conditions:

- This device may not cause harmful interference, and
- This device must accept any interference received, including interference that may cause undesired operation.

Device Name	FCC ID Number
OAP832e	RE7-OAP832E

This product is FCC marked according to the provisions of FCC Part 15.

This equipment has been tested and found to comply with the limits of a Class B digital device, pursuant to Part 15 of the FCC Rules. These limits are designed to provide reasonable protection against harmful interference when the equipment is operated in a residential environment. This equipment generates, uses, and radiates radio frequency energy, and if not installed and used in accordance with the instructions, may cause harmful interference. However, there is no guarantee that interference will not occur. If this equipment does cause interference to radio or television reception, which can be determined by turning the equipment off and on, the user is encouraged to correct the interference by one of the following measures:

- Reorient or relocate the receiving antenna.
- Increase the separation between the equipment and receiver.
- Connect the equipment into an outlet on a circuit different from to which the receiver is connected.
- Consult the dealer or an experienced radio/TV technician for help.

NOTE

The Part 15 radio device operates on a non-interference basis with other devices operating at this frequency when using the integrated antennas. Any changes or modification to the product not expressly approved by Meru could void the user's authority to operate this device.

Declaration of Conformity, Industry Canada

This equipment is in compliance with the essential requirements of other relevant provisions of Directive.

Manufacturer Information

Meru Networks, Inc
894 Ross drive,
Sunnyvale, CA 94089
USA

Declaration of Conformity

The Class B digital portion of this apparatus complies with Canadian standard ICES-003. These devices comply with RSS210 of Industry Canada.

La partie numérique de Classe B de cet appareil est conforme à la norme ICES-003 canadien. Ces appareils sont conformes à la norme RSS 210 d'Industrie Canada..

Per RSS 210 A9.5 point 7:

- The device for the band 5150-5250 MHz is only for indoor usage to reduce potential for harmful interference to co-channel mobile satellite systems (The device for the band 5150-5250 MHz is only for indoor usage to reduce potential for harmful interference to co-channel mobile satellite systems)
- The maximum antenna gain permitted (for devices in the bands 5250-5350 MHz and 5470-5725 MHz) to comply with the EIRPlimit; and the maximum antenna gain permitted (for devices in the band 5725-5825 MHz) to comply with the EIRP limits specified for point-to-point and non point-to-point operation as appropriate, as stated in section A9.2(3) (The maximum antenna gain permitted (for devices in the bands 5250-5350 MHz and 5470-5725 MHz) to comply with the EIRPlimit; and the maximum antenna gain permitted (for devices in the band 5725-5825 MHz) to comply with the EIRP limits specified for point-to-point and non point-to-point operation as appropriate, as stated in section A9.2(3).
- In addition, users should also be cautioned to take note that high-power radars are allocated as primary users (meaning they have priority) of the bands 5250-5350 MHz and 5650-5850 MHz and these radars could cause interference and/or damage to WLAN devices (En outre, les utilisateurs doivent également être avertis de prendre note que les radars à haute puissance sont désignés comme utilisateurs principaux (ils ont la priorité) des bandes 5250-5350 MHz et 5650-5850 MHz et ces radars pourraient cause des interférences et / ou endommager aux appareils WLAN.

- These devices are not permitted to operate in the 5600 - 5650 MHz band (Ces appareils ne sont pas autorisés à opérer dans le 5600 - bande 5650 MHz.)

For products available in the Canadian markets, only channels 1 through 11 can be operated. Selection of other channels is not authorized. Operation is subject to the following two conditions: (1) this device may not cause interference, and (2) this device must accept any interference, including interference that may cause undesired operation of this device.

Pour les produits disponibles sur les marchés canadiens, seuls les canaux 1 à 11 peuvent être utilisés. La sélection d'autres canaux n'est pas autorisée. Son fonctionnement est soumis aux deux conditions suivantes: (1) cet appareil ne doit pas provoquer d'interférences et (2) cet appareil doit accepter toute interférence, y compris celles pouvant causer un mauvais fonctionnement de ce dispositif

This device and its listed antenna(s) must not be co-located or operated in conjunction with any other antenna or transmitter

Cet appareil et son antenne énuméré (s) ne doivent pas être situés ou exploités conjointement avec une autre antenne ou transmetteur

The term "IC" before the equipment certification number only signifies that the Industry Canada technical specifications were met.

Le terme "IC" avant le numéro de certification de l'équipement signifie seulement que les spécifications techniques d'Industrie Ca-nada ont été atteints

To reduce the potential radio interference to other users, the antenna type and gain should be chosen so that the equivalent isotropic radiated power (EIRP) is not more than that required for successful communication. This device complies with Class B Limits of Industry Canada. Operation is subject to the following two conditions:

Pour réduire le risque d'interférence avec d'autres utilisateurs, le type d'antenne et le gain doivent être choisis de telle sorte que la puissance isotrope rayonnée équivalente ne soit pas supérieure à celle requise pour une communication réussie. Cet appareil est conforme aux limites de Classe B d'Industrie Canada. Son fonctionnement est soumis aux deux conditions suivantes

- This device may not cause harmful interference, and
- Cet appareil ne doit pas provoquer d'interférences nuisibles, et
- This device must accept any interference received, including interference that may cause undesired operation.
- Cet appareil doit accepter toute interférence reçue, y compris les interférences pouvant entraîner un fonctionnement indésirable.

To prevent radio interference to the licensed service, this device is intended to be operated indoors and away from windows to provide maximum shielding. Equipment (or its transmit antenna) that is installed outdoors is subject to licensing.

Pour empecher que cet appareil cause du brouillage au service faisant l'objet d'une licence, il doit etre utilze a l'interieur et devrait etre place lin des fenetres afin de Fournier un ecram de blindage maximal. Si le matriel (ou son antenne d'emission) est installe a l'exterieur, il doit faire l'objet d'une licence.

Device Name (Nom de l'appareil)	Industry Canada ID Number (Industrie Canada Numéro d'identification)
OAP832e	6749A-OAP832E

Declaration of Conformity, R&TTE Directive 1999/5/EC

This equipment is in compliance with the essential requirements of other relevant provisions of Directive.

Declaration of Conformity

Hereby, Networks Inc. declares that this unit is in compliance with the essential requirements and other relevant provisions of Directive 1999/5/EC.

To obtain the declaration of conformity (DoC) for R&TTE Directive, please access the following URL address. http://www.merunetworks.com

Notice for customers: the following information is only applicable to equipment sold in countries applying EU directives. System may be operated in following countries:

EU Countries: Austria, Belgium, Bulgaria, Croatia, Cyprus, Czech Republic, Denmark, Estonia, Finland, France, Germany, Greece, Hungary, Ireland, Italy, Latvia, Lithuania, Luxembourg, Malta, The Netherlands, Poland, Portugal, Romania, Slovakia, Slovenia, Spain, Sweden, United Kingdom.

This equipment can be operated in other non-European countries.

EFTA Countries: Norway and Switzerland
EU Applicants: Albania, Bosnia and Herzegovina
EU Candidate: Iceland, Macedonia and Montenegro

The following standards were applied:

- EMC-EN 301.489-1 Article 3.1 (b) of R&TTE Directive; EN 301.489-17 Article 3.1 (b) of R&TTE Directive
- Health & Safety-EN60950-1
- Radio-EN 300 328 Article 3.1 (b) of R&TTE Directive; EN 301.893 Article 3.1 (b) of R&TTE Directive

- The conformity assessment procedure referred to in Article 10.4 and Annex III of Directive 1999/5/EC has been followed.

Language	Content of Declaration
Български (Bulgarian)	това оборудване е в съответствие със съществените изисквания и другите приложими разпоредби на Директива 1999/5/ЕО
Česka (Czech)	Toto zařízení je ve shodě se základními požadavky a dalšími příslušnými ustanoveními směrnice 1999/5/ES
Dansk (Danish)	Dette udstyr er i overensstemmelse med de væsentlige krav og øvrige relevante krav i direktiv 1999/5/EF
Deutsch (German)	Dette udstyr er i overensstemmelse med de væsentlige krav og andre relevante bestemmelser i direktiv 1999/5/EF
Esti (Estonian)	See seade on vastavuses oluliste Krav ja muude asjaomaste komisjoni direktiivi 1999/5/EÜ
English (English)	This equipment is in compliance with the essential requirements and other relevant provisions of Directive 1999/5/EC
Español (Spanish)	Este equipo cumple con el krav esenciales y otras comisiones pertinentes de la Directiva 1999/5/CE
Ελληνικά (Greek)	Αυτή η συσκευή είναι σύμφωνη με τις βασικές Krav και άλλα αρμόδια επιτροπή της οδηγίας 1999/5/ΕΚ
Français (French)	Cet appareil est en conformité avec le krav essentielles et aux autres commissions pertinentes de la directive 1999/5/CE
Isendska (Icelandic)	Þessi búnaður er í samræmi við nauðsynleg krav og aðrar viðeigandi þóknun tilskipunar 1999/5/EB
Italiano (Italian)	Questa apparecchiatura è conforme con il krav essenziali e altri servizi della Commissione, della direttiva 1999/5/CE
Latviešu (Latvian)	Šis aprīkojums ir saskaņā ar būtiskajām Krav un citiem attiecīgajiem Komisijas Direktīvas 1999/5/EK
Lietuvių (Lithuanian)	Ši įranga atitinka esminius Krav ir kitomis atitinkamomis Komisijos direktyvos 1999/5/EB
Nederlands (Dutch)	Deze apparatuur voldoet aan de essentiële krav en andere relevante provisies van Richtlijn 1999/5/EG
Malti (Maltese)	Dan it-tagħmir huwa konformi mal-Krav essenzjali u kummissjoni rilevanti oħra tad-Direttiva 1999/5/KE
Magyar (Hungarian)	Ez a berendezés megfelel a vonatkozó alapvető Krav és egyéb releváns bizottsági irányelv 1999/5/EK
Norsk (Norwegian)	Dette utstyret er i samsvar med de grunnleggende krav og andre relevante oppdrag i direktiv 1999/5/EF
Polski (Polish)	Ten sprzęt jest zgodny z zasadniczymi KRAV oraz innych właściwych komisji dyrektywy 1999/5/WE
Portugues (Portuguese)	Este equipamento está em conformidade com o krav essencial e outra comissão pertinente da Directiva 1999/5/CE
Română Romanian	Acest echipament este în conformitate cu Krav esențiale și alte Comisie relevante ale Directivei 1999/5/CE
Slovensko (Slovenian)	Ta oprema je v skladu z bistvenimi Krav in druge ustrezne provizije Direktive 1999/5/ES
Slovensky (Slovak)	Toto zariadenie je v súlade so základnými kráv a ostatnými príslušnými útvarmi Komisie smernice 1999/5/ES
Suomi (Finnish)	Tämä laite on yhdenmukainen olennaisten krav ja muiden asiaan liittyvien komission direktiivin 1999/5/EY
Svenska (Swedish)	Denna utrustning är i överensstämmelse med de grundläggande krav och andra relevanta uppdrag av direktiv 1999/5/EG

This device is intended to be used in all EU and EFTA countries.

Device Name	Certification Report Number
OAP832e	--

VCCI Statement

この装置は、クラスB情報技術装置です。この装置は、家庭環境で使用することを目的としていますが、この装置がラジオやテレビジョン受信機に近接して使用されると、受信障害を引き起こすことがあります。
取扱説明書に従って正しい取り扱いをして下さい。

VCCI－B

English Translation

This is a Class B product based on the standard of the Voluntary Control Council for Interference from Information Technology Equipment (VCCI). If this is used near a radio or television receiver in a domestic environment, it may cause radio interference. User shall install and use the equipment according to the instruction manual.

General Information of RF Exposure

International Guidelines

This Device Meets International Guidelines for Exposure to Radio Waves.

The OAP832e device includes radio transmitters and receivers. It is designed not to exceed the limits for exposure to radio waves (radio frequency electromagnetic fields) recommended by international guidelines. The guidelines were developed by an independent scientific organization (ICNIRP) and include a substantial safety margin designed to ensure the safety of all persons, regardless of age and health.

As such the systems are designed to be operated as to avoid contact with the antennas by the end user. It is recommended to set the system in a location where the antennas can remain at least a minimum distance as specified from the user in accordance to the regulatory guidelines which are designed to reduce the overall exposure of the user or operator.

Separation Distance		
MPE	**Distance**	**Limit**
0.82 mW/cm2	25 cm (9.84 inches)	1.00mW/cm2

The World Health Organization has stated that present scientific information does not indicate the need for any special precautions for the use of wireless devices. They recommend that if you are interested in further reducing your exposure then you can easily do so by reorienting antennas away from the user or placing he antennas at a greater separation distance then recommended.

FCC Guidelines

This device meets FCC guidelines for exposure to radio waves.

The OAP832e includes radio transmitters and receivers. It is designed not to exceed the limits for exposure to radio waves (radio frequency electromagnetic fields) as referenced in FCC Part 1.1310. The guidelines are based on IEEE ANSI C 95.1 (92) and include a substantial safety margin designed to ensure the safety of all persons, regardless of age and health.

As such the systems are designed to be operated as to avoid contact with the antennas by the end user. It is recommended to set the system in a location where the antennas can remain at least a minimum distance as specified from the user in accordance to the regulatory guidelines which are designed to reduce the overall exposure of the user or operator.

The device has been tested and found compliant with the applicable regulations as part of the radio certification process.

The FCC recommends that if you are interested in further reducing your exposure then you can easily do so by reorienting antennas away from the user or placing the antennas at a greater separation distance then recommended or lowering the transmitter power output.

Separation Distance		
MPE	**Distance**	**Limit**
0.82 mW/cm2	25 cm (9.84 inches)	1.00mW/cm2

Industry Canada Guidelines

This device meets Industry Canada guidelines for exposure to radio waves.

The OAP832e includes radio transmitters and receivers. It is designed not to exceed the limits for exposure to radio waves (radio frequency electromagnetic fields) as referenced in Health Canada Safety Code 6. The guidelines include a substantial safety margin designed into the limit to ensure the safety of all persons, regardless of age and health.

As such the systems are designed to be operated as to avoid contact with the antennas by the end user. It is recommended to set the system in a location where the antennas can remain at least a minimum distance as specified from the user in accordance to the regulatory guidelines which are designed to reduce the overall exposure of the user or operator.

Health Canada states that present scientific information does not indicate the need for any special precautions for the use of wireless devices. They recommend that if you are interested in further reducing your exposure you can easily do so by reorienting antennas away from the user, placing the antennas at a greater separation distance than recommended, or lowering the transmitter power output.

Separation Distance		
MPE	**Distance**	**Limit**
0.63 mW/cm2	20 cm (7.87 inches)	1.00 mW/cm2

Health Canada states that present scientific information does not indicate the need for any special precautions for the use of wireless devices. They recommend that if you are interested in further reducing your exposure you can easily do so by reorienting antennas away from the user, placing the antennas at a greater separation distance than recommended, or lowering the transmitter power output.

B Additional Notes

Maximum EIRP

The transmit EIRP is the sum of the conductive transmit power, IEEE Std 802.11n multiple stream effect, and the antenna gain. By default, Meru OAP832e EIRP is set lower than the regulatory limit with the default antenna.

Manufacturing Information

The OAP832e models are built in Taiwan.

Distributed Antenna Systems (DAS)

Meru Networks does not certify or endorse any specific Distributed Antenna System (DAS) vendors. Meru Networks will provide support to Meru Wi-Fi customers that use distributed antennas within the terms and conditions of the MeruAssure Terms of Service and in accordance with the customer's support agreement. Meru Customer Support will support Meru software and hardware, and will work jointly with DAS vendors to identify and troubleshoot issues, but any support related to RF issues, including RF coverage, shall be the responsibility of the DAS vendor.

Meru Networks recommends that customers use only a DAS that has been tested to work with Meru hardware and software. Meru does not provide any site surveys, design or implementation of Wi-Fi over DAS. Meru recommends that customers obtain such services from a trained and qualified systems integrator or from their DAS vendor.

Air Handling Space Requirements

When installing APs in an air-handling space, as described in Article 300.22(C) of the National Electric Code® (2008 edition, pages 70-135 and 70-136), the unit should only be powered by the Ethernet port (PoE), not by the AC-powered power supply.

Only OAP832e with plastic facade removed can be applied in air-handling space.

When the product is installed in air-handling spaces, the cables employed should be suitable under NEC Articles 300.22 and 725 and marked accordingly, for use in plenum and air-handling spaces with regard to smoke propagation, such as CL2-P, CL3-P, MPP or CMP.

The products should be installed in accordance with all applicable, local regulations and practices. Compliance applies only when the plastic facade is removed from the AP.

Frequencies Blocked for Regulatory Compliance

To ensure compliance with local regulations, be sure to set your Access Point to the country in which you are using the Access Point.

Underwriters Laboratories

Suitable for use in environmental air space in accordance with Section 300-22(c) of the National Electrical Code, and Sections 2-128, 12-010(3) and 12-100 of the Canadian Electrical Code, Part 1, C22.1.

Restriction of Hazardous Substances

European Community

This device complies the Restriction of Hazardous Substances Directive (RoHS) for its restriction of the use of certain hazardous substances in electrical and electronic equipment for European Union.

China

This device complies Administrative Measure on the Control of Pollution Caused by Electronic Information Products or China RoHS. OAP832e may contain hazardous substances and they are marked..

AP832	Toxic and Hazardous Substances or Elements					10
Component with toxic and hazardous substances	Pb (Lead)	Hg (Mercury)	Cd (Cadmium)	Cr(VI) (Hexavalent Chrome)	PBB (Polybrominated biphenyl)	PBDE (Polybrominated diphenyl ether)
Circuit Modules	X	O	O	O	O	O
Metal Parts	O	O	O	O	O	O
Plastic and Polymeric Parts	O	O	O	O	O	O

O: Indicates that the content of the toxic and hazardous substance in all the homogenous materials of the part is below the concentration limit requirement for RoHS compliance.
X: Indicates that the content of the toxic and hazardous substance in at least one homogeneous material of the part exceeds the concentration limit requirement for RoHS compliance

C Cautions and Warnings

The cautions and warnings that appear in this manual are listed below in English, German, French, and Spanish. Changes or modifications not expressly approved by the party responsible for compliance could void the user’s authority to operate the equipment.

Cautions

A Caution calls your attention to a possible hazard that can damage equipment.

"Vorsicht” weist auf die Gefahr einer möglichen Beschädigung des Gerätes in.

Une mise en garde attire votre attention sur un risque possible d'endommagement de l'équipement. Ci-dessous, vous trouverez les mises en garde utilisées dans ce manuel.

Un mensaje de precaución le advierte sobre un posible peligro que pueda dañar el equipo. Las siguientes son precauciones utilizadas en este manual.

⚠	When changing the orientation of the antennas, be sure to slightly loosen the knurled ring before moving the antenna. Retighten the ring afterward. Otherwise, you might damage the internal cabling in the AP. Bei einer Neuausrichtung der Antennen muss vor Bewegung der Antenne der Rändelring leicht gelockert werden. Anschließend den Ring wieder festziehen. Anderenfalls können die internen Kabel im AP beschädigt werden. En cas de modification d’orientation des antennes, veiller à desserrer légèrement la bague moletée avant de réorienter l’antenne. Resserrer ensuite la bague, faute de quoi le câblage interne du point d’accès pourrait être endommagé. Al cambiar la orientación de las antenas, asegúrese de aflojar ligeramente el anillo estriado antes de mover la antena. Luego vuelva a apretar el anillo. De otro modo, podría dañar el cableado interno del punto de acceso.

	The radiated output power of the access points is well below the radio frequency exposure limits. However, the Meru Access Point should be used in such a manner that the potential for human contact during normal operation is minimized. To avoid the possibility of exceeding the radio frequency exposure limits, you should keep a distance of at least 20 cm between you (or any other person in the vicinity) and the Access Point antennas. Die abgestrahlte Ausgangsleistung von Geräten von Meru Networks, Inc. liegt weit unter den Hochfrequenz-Expositionsgrenzwerten der. Die Meru Access Point Zugangspunkte von Meru Networks, Inc. sollten jedoch so verwendet werden, dass das Potenzial für Kontakt mit Menschen während des normalen Betriebs auf ein Mindestmaß beschränkt wird. Um die Möglichkeit einer Überschreitung der -Hochfrequenz-Expositionsgrenzwerte zu vermeiden, ist ein Abstand von mindestens 20 cm zwischen Ihnen (bzw. einer anderen Person in der Nähe) und den Zugangspunkt-Antennen zu wahren. La puissance de rayonnement émise par les équipements Meru Networks, Inc. est très inférieure aux limites d'exposition aux fréquences radio définies par la. Toutefois, les points d'accès de la série Meru Access Point de Meru Networks, Inc. doivent être utilisés de façon à éliminer tout risque de contact humain en fonctionnement normal. Pour éviter de dépasser les limites d'exposition aux fréquences radio définies par la , il est impératif de préserver en permanence une distance supérieure ou égale à 20 cm entre l'utilisateur (ou toute personne se trouvant à proximité) et les antennes du point d'accès. La potencia de radiación de los dispositivos de Meru Networks, Inc. está muy por debajo de los límites de exposición a radiofrecuencia estipulados por la. No obstante, los puntos de acceso de la serie Meru Access Point de Meru Networks, Inc. deben usarse de tal manera que se minimice la posibilidad de contacto para el usuario durante la operación normal. Para evitar la posibilidad de exceder los límites de exposición a radiofrecuencia establecidos por la, el usuario (o cualquier otra persona en torno) debe mantenerse a una distancia de al menos 20 cm respecto a las antenas del punto de acceso.

⚠	Exposure to Radio Frequency Radiation. The installer of this radio equipment must ensure that the antenna is located or pointed such that it does not emit an RF field in excess of Health Canada limits for the general population; consult Safety Code 6, obtainable from Health Canada's website http://www.hc-sc.gc.ca/rpb. Exposition aux rayonnements à fréquence radioélectrique L'installateur de cet équipement radio doit veiller à positionner et orienter l'antenne de telle sorte qu'elle n'émette pas un champ radioélectrique supérieur aux limites définies par Santé Canada pour la population générale. Consulter le Code de sécurité n° 6, disponible sur le site Web de Santé Canada à l'adresse http://www.hc-sc.gc.ca/rpb. Exposición a la radiación de radiofrecuencia. El instalador de este equipo de radio debe cerciorarse de que la antena está localizada u orientada de tal manera que no emita un campo de radiofrecuencia superior a los límites estipulados por Health Canada para la población; consulte el Código de Seguridad 6 que podrá encontrar en el página web de Health Canada, http://www.hc-sc.gc.ca/rpb.

Warnings

A warning calls your attention to a possible hazard that can cause injury or death. The following are the warnings used in this manual.

"Achtung" weist auf eine mögliche Gefährdung hin, die zu Verletzungen oder Tod führen können. Sie finden die folgenden Warnhinweise in diesem Handbuch:

Un avertissement attire votre attention sur un risque possible de blessure ou de décès. Ci-dessous, vous trouverez les avertissements utilisés dans ce manuel.

Una advertencia le llama la atención sobre cualquier posible peligro que pueda ocasionar daños personales o la muerte. A continuación se dan las advertencias utilizadas en este manual.

antenas del punto de acceso.

	With plastic covers removed, this product is suitable for use in environmental air-handling space in accordance with the Section 300-22(c) of the National Electric Code and Sections 2- 128.12 - 010 (3) and 12 - 100 of the Canadian Electrical Code. Part 1. C22. 1. For other countries, consult local authorities for regulations. Bei abgenommener Kunststoffabdeckung ist dieses Produkt zur Verwendung in einem Umgebungsluftraum gemäß Abschnitt 300-22(c) des National Electric Code und Abschnitt 2- 128.12 - 010 (3) und 12 - 100 des Canadian Electrical Code Teil 1. C22.1 geeignet. Die Vorschriften für andere Länder sind bei den örtlichen Behörden erhältlich. Sous réserve que ses couvercles de plastique soient déposés, cet appareil est adapté à une utilisation dans les vides de construction des bâtiments selon la section 300-22(c) du code NEC (National Electric Code) et les sections 2- 128.12 - 010 (3) et 12 - 100 du Code électrique du Canada, partie 1. C22. 1. Pour tous les autres pays, consulter les organismes de réglementation locaux. Una vez desprendidas las cubiertas de plástico, este producto es adecuado para su uso en el espacio aéreo circundante en conformidad con la sección 300-22(c) del National Electric Code (Código Eléctrico Nacional de EE.UU.) y las secciones 2- 128.12 - 010 (3) y 12 - 100 del Código Eléctrico de Canadá. Parte 1. C22. 1. En otros países, consulte a las autoridades locales competentes para informarse acerca de las normativas vigentes.

	Any Ethernet cables installed in air-handling spaces should be suitable under NEC Article 800.50 and marked accordingly for use in plenums and air-handling spaces with regard to smoke propagation, such as CL2-P, CL3-P, MPP (Multi Purpose Plenum), or CMP (Communications Plenum). Alle Ethernet Kabel, die in Lüftungsräumen installiert werden, sollten gemäß NEC Artikel 800.50 geeignet sein und entsprechend zur Verwendung in Hohlräumen (Plenum) und Lüftungsräumen im Hinblick auf Rauchausbreitung gekennzeichnet sein, z.B. CL2-P, CL3-P, MPP (Multi Purpose Plenum) oder CMP (Communications Plenum). Les câbles Ethernet installés dans un vide d’air doivent correspondre aux critères de l’article 800.50 du code NEC et identifiés en conséquence comme adaptés à une utilisation dans les vides de construction des bâtiments en matière de propagation de la fumée (marquages CL2-P, CL3-P, MPP (Multi Purpose Plenum) ou CMP (Communications Plenum)). Todos los cables Ethernet instalados en espacios aéreos deben cumplir con el artículo 800.50 del NEC y estar marcados adecuadamente para su uso en espacios aéreos y plenums en lo concerniente a la propagación de humo, tales como CL2-P, CL3-P, MPP (Plenum multifuncional), o CMP (Plenum de comunicaciones).

Indoor antennas must be positioned to observe minimum separation of 20 cm. (~ 8 in.) from all users and bystanders. For the protection of personnel working in the vicinity of inside (downlink) antennas, the following guidelines for minimum distances between the human body and the antenna must be observed.

The installation of the indoor antenna must be such that, under normal conditions, all personnel cannot come within 20 cm. (~ 8.0 in.) from any inside antenna. Exceeding this minimum separation will ensure that the employee or bystander does not receive RF-exposure beyond the Maximum Permissible Exposure according to local country regulatory approval.

Indoorantennen müssen so positioniert werden, dass ein Mindestabstand von 20 cm (ca. 8 Zoll) zu allen Benutzern und anderen Personen gewahrt wird. Zum Schutz von Personal, das in der Nähe von Innenantennen (Downlink) arbeitet, sind die folgenden Richtlinien für Mindestabstand zwischen dem menschlichen Körper und der Antenne zu beachten.

Die Innenantenne muss so installiert werden, dass sich unter normalen Bedingungen kein Personal bis auf weniger als 20 cm (ca. 8 Zoll) an eine Innenantenne annähern kann. Durch Überschreitung dieses Mindestabstands wird sichergestellt, dass Mitarbeiter oder andere Personen keiner RF-Exposition über die maximal zulässige Exposition (MPE; Maximum Permissible Exposure) gemäß FCC CFR 47, Abschnitt 1.1310 (Grenzwerte für die allgemeine Bevölkerung/unkontrollierte Exposition) ausgesetzt werden.

Les antennes intérieures doivent être positionnées de façon à respecter une distance minimum de 20 cm par rapport aux utilisateurs et aux tiers. Pour la protection du personnel travaillant à proximité des antennes intérieures (liaison descendante), respecter les directives suivantes pour assurer des distances minimales entre les êtres humains et les antennes.

Toute antenne intérieure doit être installée de telle sorte que, dans des conditions normales, le personnel ne puisse s'en approcher à moins de 20 cm. Cette distance minimale est destinée à garantir qu'un employé ou un tiers ne sera pas exposé à un rayonnement radioélectrique supérieur à la valeur maximale autorisée, telle qu'elle est définie dans les limites d'exposition non contrôlées pour la population par la réglementation de la FCC CFR 47, section 1.1310.

Las antenas interiores deben colocarse de manera que se observe una separación mínima de 20 cm. (~ 8 pulg.) respecto a todos los usuarios y circunstantes. Para la protección del personal que trabaje en las inmediaciones de las antenas interiores (receptoras), deben observarse las siguientes directrices relativas a la distancia mínima entre el cuerpo humano y la antena.

La instalación de la antena interior debe efectuarse de tal modo que, en condiciones normales, ningún miembro del personal pueda acercarse a menos de 20 cm. (~ 8,0 pulg.) de cualquier antena interior. El cumplimiento de este mínimo de separación asegura que el empleado o circunstante no recibirá exposición a radiofrecuencia por encima de la Exposición Máxima Permisible conforme a la normativa FCC CFR 47, sección 1.1310, es decir, los límites asignados a la Exposición Incontrolada/Población Civil.