urmet

iPer voice

Mod. 1717

DS 1717-019

LBT 20142

IP 7'' TOUCHSCREEN MONITOR
MONITEUR IP 7'' À ÉCRAN TACTILE
MONITOR IP 7'' PANTALLA TÁCTIL

Ref. 1717/32 (white, blanc, blanco)
Ref. 1717/34 (black, noire, negro)

max

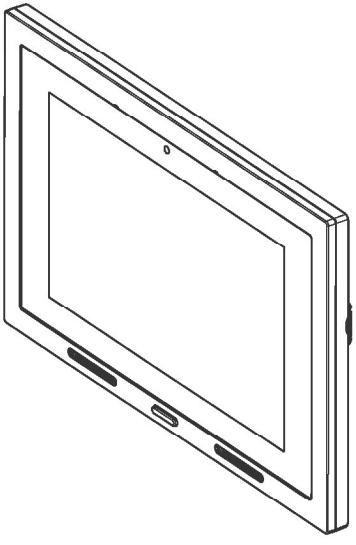

INSTALLATION HANDBOOK
NOTICE D'INSTALLATION
MANUAL DE INSTALACIÓN

FCC ID : REA171732

ENGLISH 3
FRANÇAIS 6
ESPAÑOL 9

ENGLISH

The monitor Ref.1717/32 or /34 is an IP video door phone dedicated to the IPerVoice system.
For trouble-free operation, the device requires a LAN/POE-type connection.

DESCRIPTION OF COMPONENTS AND CHARACTERISTICS

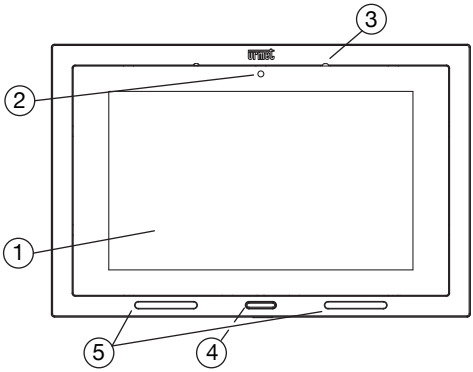

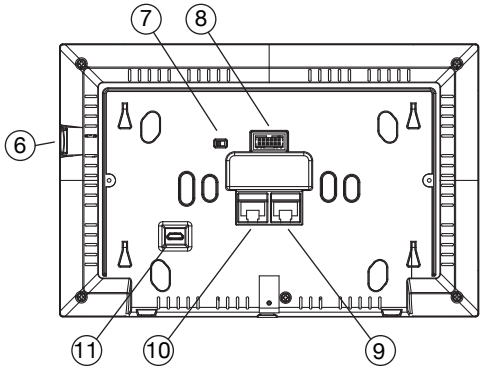

1. 7” touchscreen display
2. Webcam 2Mpx
3. Microphone
4. Backlit blue Home button
5. Speakers
6. Micro SD card
7. Switch for IPerHOME bus termination (IPERHOME TERM)
8. 12 way connector for external connections’ printed circuit
9. Secondary LAN connector for Internet IPerHOME connection (LOCAL LAN PORT)
10. IPerVoice LAN connector with POE power supply (DOORPHONE POE PORT)
11. Micro USB connector for Eeprom programming (for future developments)

DESCRIPTION OF TERMINAL PINS

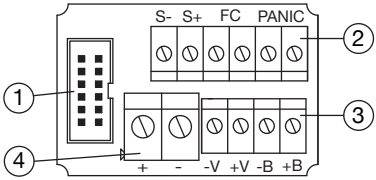

1. 12 way connector used for monitor connection to the printed circuit
2. Terminals for the connection of:
   - panic alarm (PANIC)
   - floor call (FC)
   - call repeater (S+, S-)
3. Terminals for connection to the IPerHOME system (-V, +V, -B, +B)
4. External power supply terminals (24 V⎓ : +, -)

WIRING INSTRUCTIONS

RJ45 Ethernet Cable

The IPerVoice system has been designed to work with the EIA/TIA 568B standard.

- Plug the cable into one of the RJ45 connectors with the Urmet logo.
- Insert the wire in its guide, according to the provided colour code (Standard T568B).

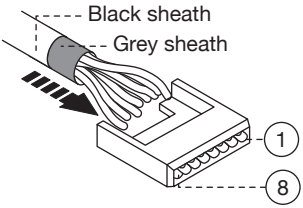

Wire No.	Cable colour
1	White-Orange
2	Orange
3	White-Green
4	Blue

Wire No.	Cable colour
5	White-Blue
6	Green
7	White-Brown
8	Brown

- Cut the cables so that they protrude from the guide by about 5 mm, insert the guide in its plug and crimp with the specially provided tool.

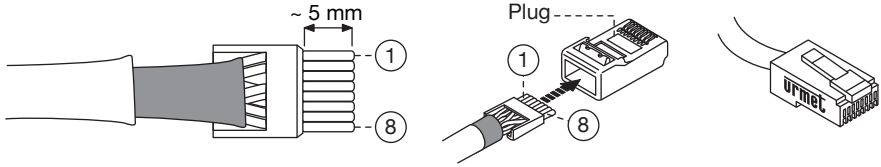

Make sure that the grey sheath stays inside the plug.

This type of connection will NOT guarantee double insulation.

POWER SUPPLY

The 1717/32 or /34 monitor can be supplied power in two different ways:
— POE
— 24 V⎓ – 18 W power supply

When the power supply is used, POE is not available because the monitor is powered only by the local power supply. In this case, RJ45 can be connected to the NO POE port of the switch.

INSTALLATION

It is possible to fix the wall bracket by using a 503 box and the supplied screws, or a Ø 60 box with suitable screws.

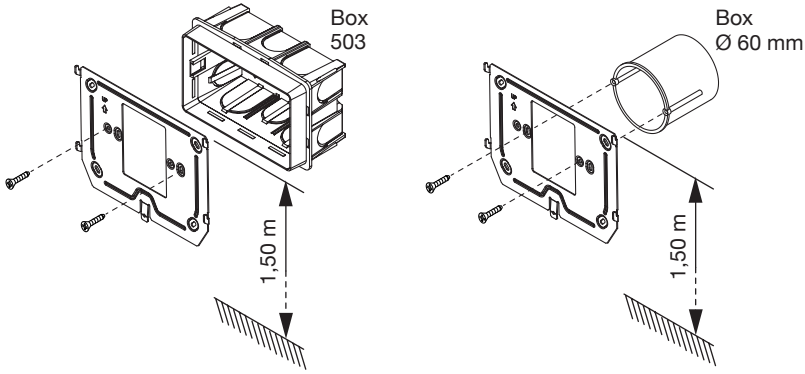

- Connect any panic function, extra ring tone, floor call, auxiliary power and link to IPerHOME system function wires to the terminals on the external printed circuit.
- Connect the monitor to the connector CN1 on the printed circuit board via the cable provided on the back of the monitor.
- Move the monitor close to the bracket by centring the special fixings (1) and slide it down to reach its stop (2) (see the following image).

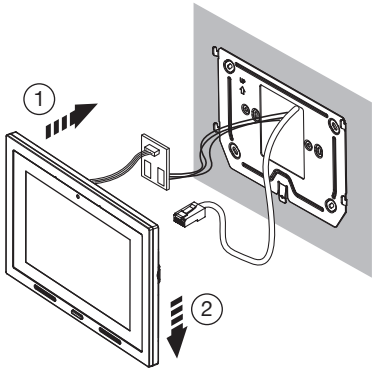

DISTANCES, SECTIONS, CABLES AND TECH SPECS

Type of connection	**Max distance**	**Min - max cross** section
Call to floor level	30 m	0,5 - 1 mm²
Panic Alarm	30 m	0,5 - 1 mm²
Call repeating	30 m	0,5 - 1 mm²
External 24 Vdc	25 m	0,5 - 1 mm²
LAN	100 m	CAT5e (*)

(*) To ensure longest-range monitor operation, the cable must be a class 5e device and the twisted pairs' cross section must be AWG24.
The maximum resistance of the individual wires must not exceed 10ohm/100m.
The cable must be up to the following standards:
- EIA/TIA 568-B.2 or EIA/TIA 568-C.2
- EN50288 3-1
- IEC 61156-5

The connection between the monitor and POE switch must be ensured by a single cable without any extra patch cords.

POE input voltage: ..... **48-54 V ⎓**
External power supply voltage: ..... **24 V ⎓**
Max consumption: ..... **12 W**
Display: ..... **7" TFT**
Touchscreen: ..... **Capacitive**
Resolution: ..... **1024 x 600 px**
Brightness: ..... **350 cd/m²**
Viewing Angle (H/V): ..... **160° / 160°**
Operating Temperature: ..... **-5 to 45°C**
IPerHOME CU Consumption: ..... **0.5 CU**
Max number of monitors on the POE ports of switch 1039/44: **2**

This product is intended to be powered by either any external power supply units, through the connector M1 on the board CS1717-014 (18W, 24Vdc) or PoE, through the connector CN505 whose power supply conforms to the limited power source (LPS) requirements and is protected against short circuits and power surges in accordance with the EN 60950-1:2006+A11+A1+A12+A2 requirements.

If a local power supply is used, do not connect the LAN input to the switch POE outputs.

This device complies with Part 15 of the FCC rules subject to the following two conditions:
1) This device may not cause harmful interference
2) This device must accept all interference received, including intereference that may cause undesired operation.

15.105 Information to the user statements:

This equipment has been tested and found to comply with the limits for a Class B digital device, pursuant to part 15 of the FCC Rules. These limits are designed to provide reasonable protection against harmful interference in a residential installation. This equipment generates, uses and can radiate radio frequency energy and, if not installed and used in accordance with the instructions, may cause harmful interference to radio communications. However, there is no guarantee that interference will not occur in a particular installation. If this equipment does cause harmful interference to radio or television reception, which can be determined by turning the equipment off and on, the user is encouraged to try to correct the interference by one or more of the following measures:
-Reorient or relocate the receiving antenna.
-Increase the separation between the equipment and receiver.
-Connect the equipment into an outlet on a circuit different from that to which the receiver is connected.
-Consult the dealer or an experienced radio/TV technician for help

RF exposure warning statement

To comply with FCC RF exposure compliance requirements, a separation distance of at least 20 cm must be maintained between the antenna of this device and all nearby persons

Changes or modifications not expressly approved by the party responsible for compliance could void the user's authority to operate the equipment.

URMET S.p.A.
10154 TORINO (ITALY)
VIA BOLOGNA 188/C
Telef. +39 011.24.00.000 (RIC. AUT.)
Fax +39 011.24.00.300 - 323

Area tecnica
servizio clienti +39 011.23.39.810
http://www.urmet.com
e-mail: info@urmet.com

Prodotto in P.R.C. su specifica Urmet.
Manufactured in P.R.C. on Urmet specification.