Nemko USA, Inc.
11696 Sorrento Valley Rd., Suite F
San Diego, CA 92121-1024
Phone (858) 793-9911 Fax (858) 793-9914

PART 15.249

TEST REPORT

For The **Transceiver Module**

Model: **IP Link 1200**

PREPARED FOR:

Helicomm
1947 Camino Vida Roble, Suite 109
Carlsbad, CA 92008

PREPARED ON NOVEMBER 16, 2004

REPORT NUMBER 2004 110868 FCC

PROJECT NUMBER: 24-868-HEL

DOCUMENT HISTORY

REVISION	DATE	COMMENTS
-	November 16, 2004	Prepared By: Alan Laudani
-		Initial Release: R. L. Hill

NOTE: Nemko USA, Inc. hereby makes the following statements so as to conform to Chapter 10 (Test Reports) Requirements of ANSI C63.4 (2002) "Methods and Measurement of Radio-Noise Emissions from Low-Voltage Electrical and Electronic Equipment in the Range of 9 kHz to 40 GHz":

- The unit described in this report was received at Nemko USA, Inc.'s facilities on **November 16, 2004**. Testing was performed on the unit described in this report on **November 16, 2004 to** November 16, 2004.
- The Test Results reported herein apply only to the Unit actually tested, and to substantially identical Units.
- This report does not imply the endorsement of the Federal Communications Commission (FCC), NVLAP or any other government agency.

This Report is the property of Nemko USA, Inc., and shall not be reproduced, except in full, without prior written approval of Nemko USA, Inc. However, all ownership rights are hereby returned unconditionally to **Helicomm**, and approval is hereby granted to **Helicomm** and its employees and agents to reproduce all or part of this report for any legitimate business purpose without further reference to Nemko USA, Inc.

TABLE OF CONTENTS

DOCUMENT HISTORY **2**

CERTIFICATION **4**

1. ADMINISTRATIVE DATA AND TEST SUMMARY **5**
1.1. ADMINISTRATIVE DATA 5
1.2. TEST SUMMARY 5

2. SYSTEM CONFIGURATION **6**
2.1. DESCRIPTION AND METHOD OF EXERCISING THE EUT 6
2.2. SYSTEM COMPONENTS AND POWER CABLES 6
2.3. DEVICE INTERCONNECTION AND I/O CABLES 6
2.4. DESIGN MODIFICATIONS FOR COMPLIANCE 7

3. DESCRIPTION OF TEST SITE AND EQUIPMENT **8**
3.1. DESCRIPTION OF TEST SITE 8

4. DESCRIPTION OF TESTING METHODS **9**
4.1. INTRODUCTION 9
4.2. CONFIGURATION AND METHODS OF MEASUREMENTS FOR CONDUCTED EMISSIONS 11
4.3. CONFIGURATION AND METHODS OF MEASUREMENTS FOR FREQUENCY IDENTIFICATION 13
4.4. CONFIGURATION AND METHODS OF MEASUREMENTS FOR RADIATED EMISSIONS 15

5. TEST RESULTS **17**
5.1. CONDUCTED EMISSIONS TEST DATA 17
5.2. RADIATED EMISSIONS TEST DATA 19

TEST SETUP DIAGRAMS
FIGURE 1. GENERAL EUT TEST SETUP DIAGRAM 10
FIGURE 2. CONDUCTED EMISSIONS TEST SETUP DIAGRAM 12
FIGURE 3. FREQUENCY ID OF RADIATED EMISSIONS TEST SETUP DIAGRAM 14
FIGURE 4. RADIATED EMISSIONS TEST SETUP DIAGRAM 16

TEST CONFIGURATION PHOTOGRAPHS
PHOTOGRAPH 1. CONDUCTED EMISSIONS TEST CONFIGURATION 25
PHOTOGRAPH 2. RADIATED EMISSIONS TEST CONFIGURATION 26

APPENDICES
A. CONDUCTED & RADIATED EMISSIONS MEASUREMENT UNCERTAINTIES 27
B. NEMKO USA, INC.'S TEST EQUIPMENT & FACILITIES CALIBRATION PROGRAM 29
C. NVLAP ACCREDITATION 31

CERTIFICATION

The Radio Frequency Interference (RFI) testing, data evaluation and this report have been prepared by Nemko USA, Inc., an independent electromagnetic compatibility consulting and test laboratory.

The testing and data collection were accomplished in accordance with the requirements of the ANSI, C63.4-2002 standard and the applicable sections of FCC, Part 15, Subpart B for Class "**A**" equipment. The testing was also accomplished in accordance with Industry Canada's ICES-003 standard for unintentional radiating device per EMCAB-3, Issue 3 (May 1998). Refer to the Administrative Summary for a description of the test sample.

I certify the data, data evaluation and equipment configuration herein to be a true and accurate representation of the sample's radio frequency interference emission characteristics, as of the test date(s), and for the design of the test sample used to compile this report.

Ricky L. Hill
Manager of EMC Operations

1. ADMINISTRATIVE DATA AND TEST SUMMARY

1.1. Administrative Data

CLIENT:	**Helicomm** **1947 Camino Vida Roble, Suite 109** **Carlsbad, CA 92008** **760-918-0856** **760-918-0338**- fax
CONTACT:	**Leon Gateno**
DATE (S) OF TEST:	**November 16, 2004 to November 16, 2004**
EQUIPMENT UNDER TEST (EUT):	**Transceiver Module**
Model	**IP Link 1200**
Condition Upon Receipt	**SN 000105 Suitable for Test**
TEST SPECIFICATION:	**FCC, Part 15.249**

1.2. Test Summary

Specification	*Frequency Range*	*Compliance Status*
FCC, CFR 47, Section 15.107 Class "B" Conducted Emissions	0.45 MHz - 30.00 MHz	**N/A***
FCC, CFR 47, Section 15.209 Class "B" Radiated Emissions	30 MHz - 1000 MHz	**PASS**
FCC, CFR 47, Section 15.249	2405—2480 MHz	**PASS**

- *Not applicable as EUT is DC powered by a battery.

Test Supervisor: _____
R. L. Hill, Nemko USA, Inc.

Refer to the test results section for further details.

2.SYSTEM CONFIGURATION

2.1. Description and Method of Exercising the EUT

The IP Link 1200 is a **Transceiver Module**. Its function is a data transceiver. The EUT was exercised through a test fixture to provide battery power. The IPLINK1200 is designed to meet the IEEE802.15.4 standard. As a result the individual channels are wide bandwidth. Hence, the IPLINK1200 does not require operator tuning.

2.2. System Components and Power Cables

DEVICE	MANUFACTURER MODEL # SERIAL #	POWER CABLE
EUT - **Transceiver Module**	**Helicomm** **Transceiver Module** Serial #: 0000105	N/A
EUT Test Fixture	**Helicomm** Model # Serial #	N/A

2.3. Device Interconnection and I/O Cables

CONNECTION	I/O CABLE
No connections	

2.4. Design Modifications for Compliance

Device: **Transceiver Module**

Model: **IP Link 1200**

The following design modifications were made to the EUT during testing.

No design modifications were made to the EUT during testing.

3. DESCRIPTION OF TEST SITE AND EQUIPMENT

3.1. Description of Test Site

The test site is located at 11696 Sorrento Valley Road, Suite F, San Diego, CA 92121. The site is physically located 18 miles Northwest of downtown San Diego. The general area is a valley 1.5 miles east of the Pacific Ocean. This particular part of the valley tends to minimize ambient levels, i.e. radio and TV broadcast stations and land mobile communications. The three and ten-meter Open Area Test Site (OATS) is located behind the office/lab building. It conforms to the normalized site attenuation limits and construction specifications as set in the EN 55022 (1998), CISPR 16 (2000) and 22 (1997) and ANSI C63.4-2002 documents.

4. DESCRIPTION OF TESTING METHODS

4.1. Introduction

As required in 47 CFR, Parts 2 and 15, the methods employed to test the radiated and conducted emissions (as applicable) of the EUT are those contained within the American National Standards Institute (ANSI) document C63.4-2002, titled "Methods of Measurement of Radio-Noise Emissions from Low-Voltage Electrical and Electronic Equipment in the Range of 9 kHz to 40 GHz." All applicable FCC Rule Sections that provide further guidance for performance of such testing are also observed.

For General Test Configuration please refer to Figure 1 on the following page.

Digital devices sold in Canada are required to comply with the Interference Causing Equipment Standard for Digital Apparatus, ICES-003. These test methods and limits are specified in the Canadian Standards Association's (CSA) Standard C108.8-M1983 (1-1-94 version) and are "essentially equivalent" with FCC, Part 15 and CISPR 22 (EN55022) rules for unintentional radiators per EMCAB-3, Issue 3 (May 1998). No further testing is required for compliance to ICES-003.

Figure 1. General EUT Test Setup Diagram

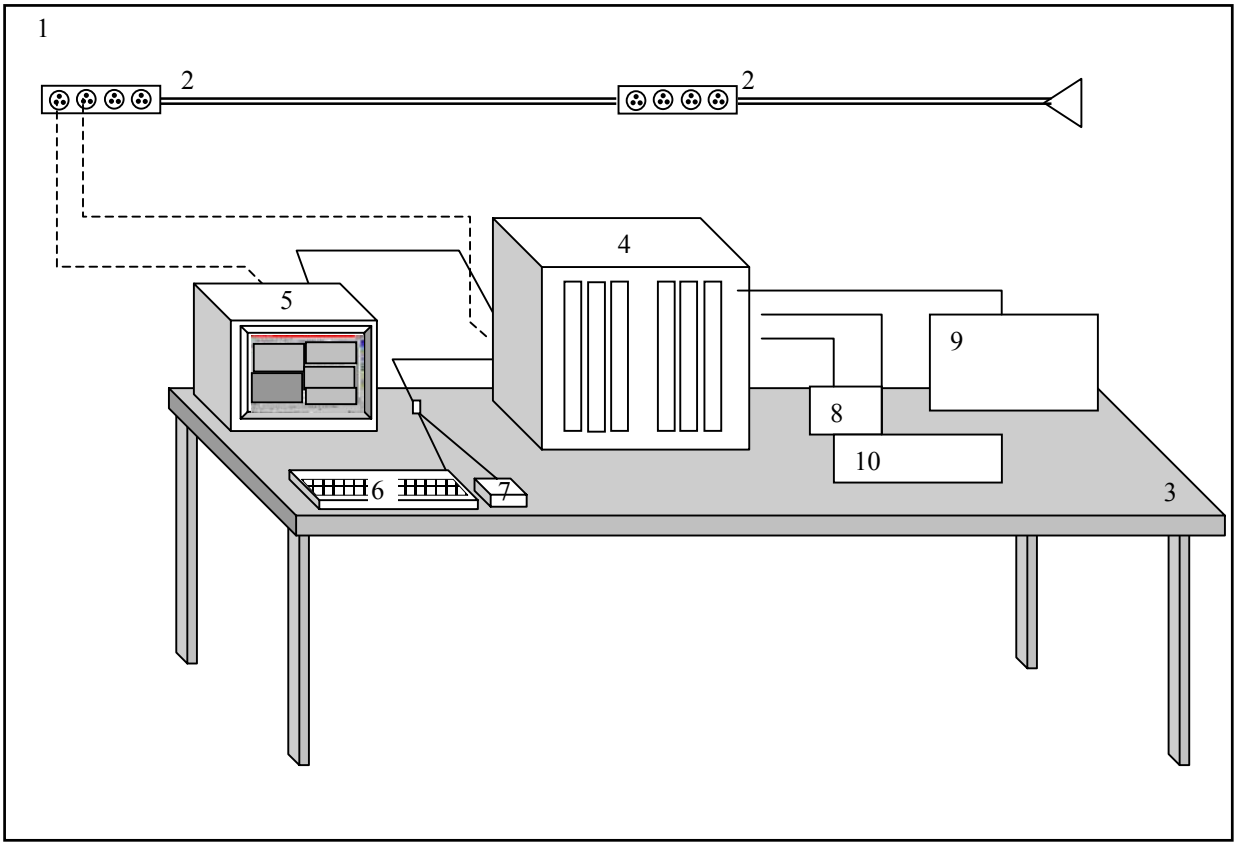

NOT TO SCALE

CONFIGURATION LEGEND

1. Test Laboratory
2. AC Power for Peripheral Devices (120V, 60 cycles, single phase)
3. Non-Conducting tables 80 cm above ground plane
4. EUT: **Transceiver Module**
5. Monitor
6. Keyboard
7. Mouse
8. USB HUB
9. Printer
10. Switch Box

4.2. Configuration and Methods of Measurements for Conducted Emissions

Section 7 of ANSI C63.4 determines the general configuration of the EUT and associated equipment, as well as the test platform for conducted emissions testing. Tabletop devices are placed on a non-conducting surface 80 centimeters above the ground plane floor and 40 centimeters from the ground plane wall. The EUT and associated system are configured to operate continuously, representing a "normally operating" mode. The EUT is powered via a Line Impedance Stabilization Network (LISN). The emissions are recorded using the required bandwidth of 9 kHz in the quasi-peak mode. The average amplitude is also observed employing a 10 kHz bandwidth to determine the presence of broadband RFI. When such interference is caused by broadband sources (as defined by the FCC and ANSI Rules), the deviation guidelines contained in Section 11.3.1 of ANSI C63.4 are employed, which allows a correction factor of 13 dB to be subtracted from the quasi-peak reading. The emission levels are then compared to the applicable FCC limits to determine compliance.

For Conducted Emissions Test Configuration please refer to Figure 2 on the following page.

Figure 2. Conducted Emissions Test Setup Diagram

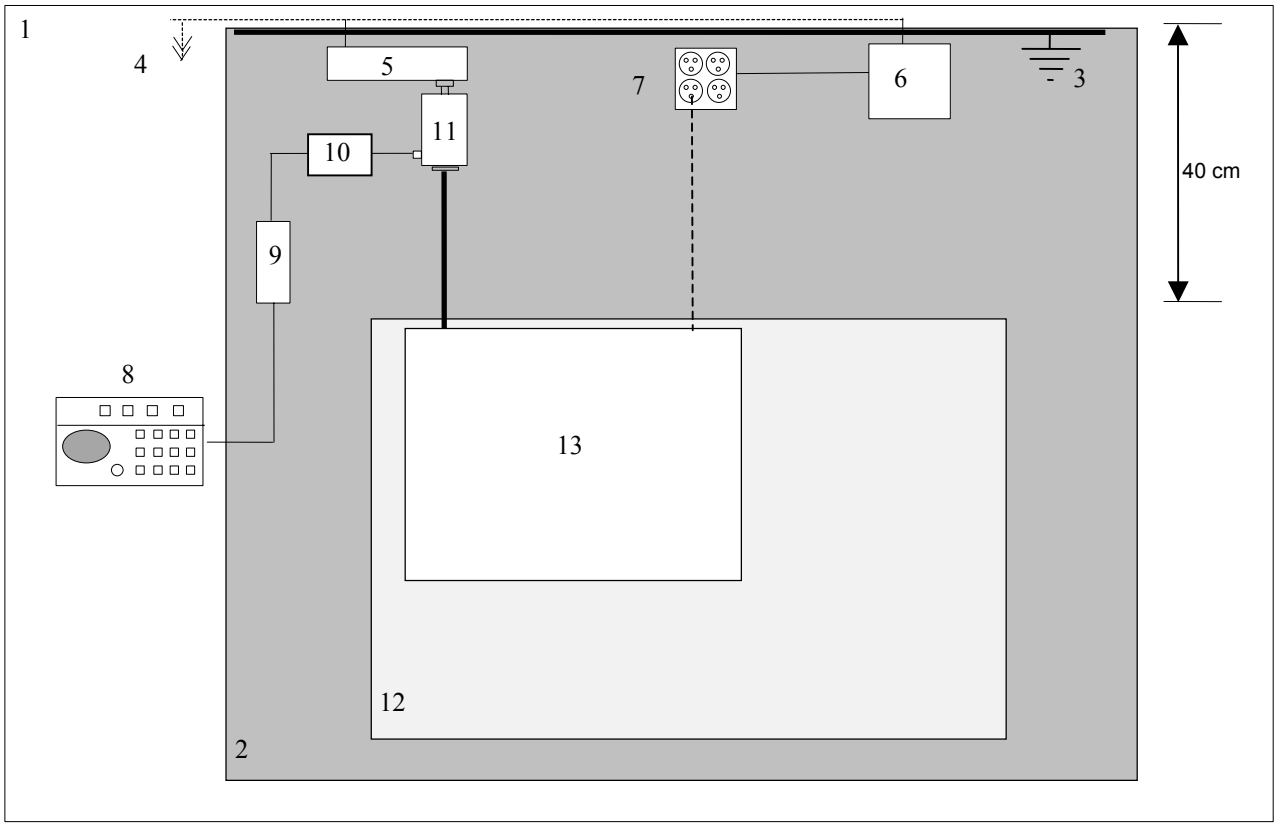

NOT TO SCALE

CONFIGURATION LEGEND

1. Test Laboratory (6 X 6 meters)
2. Ground Plane (15 square meters)
3. Vertical Conducting Wall (Grounded through Ground Plane via 10' ground rod)
4. AC Power for Devices
5. Power Line Filter, Lindgren, 120 dB, 30 amp
6. Line Impedance Stabilization Network (LISN) for peripheral devices
7. Power Distribution Box for peripheral devices
8. Spectrum Analyzer with Quasi-Peak Adapter
9. High Pass Filter
10. Transient Limiter
11. LISN for EUT
12. Non-Conducting table 80 cm above ground plane
13. EUT: **Transceiver Module** and Associated System

4.3. Configuration and Methods of Measurements for Frequency Identification

When performing all testing of equipment, the actual emissions of the EUT are segregated from ambient signals present within the laboratory or the open-field test range. Preliminary testing is performed to ensure that ambient signals are sufficiently low to allow for proper observation of the emissions from the EUT. Incoming power lines are filtered using a 120 dB, 30-ampere; 115/208-volt filter to assist in reducing ambient signals for tests of levels of conducted emissions. Ambients within the laboratory are compared to those noted at the nearby open-field site to discriminate between signals produced from the EUT and ambient signals. In the event that a significant emission is produced by the EUT at a frequency which is also demonstrating significant ambient signals, the spectrum analyzer is placed in the peak mode, the bandwidth is narrowed, the EUT's signal is centered on the analyzer, the scan width is expanded to 50 kHz while monitoring the audio to ensure that only the EUT signal is present, the analyzer is switched to quasi-peak mode, and the level of the EUT signal is recorded.

For Frequency ID Test Configuration please refer to Figure 3 on the following page.

Figure 3. Frequency ID of Radiated Emissions Test Setup Diagram

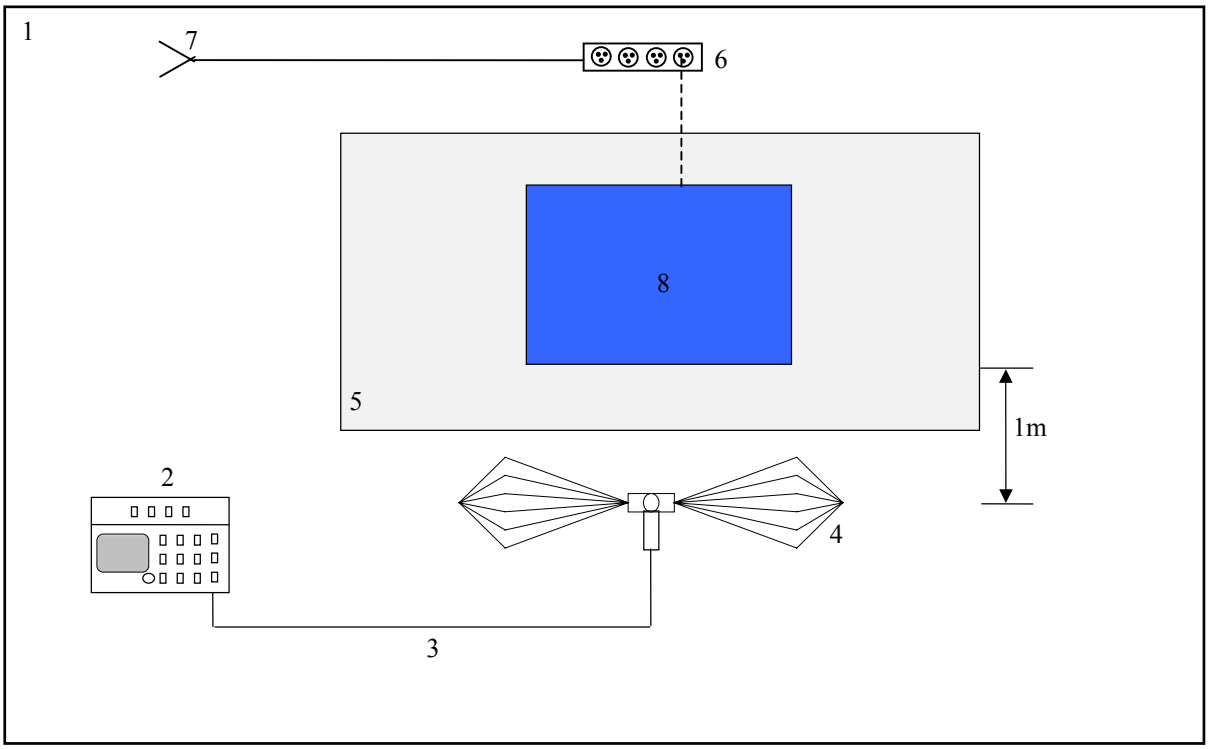

NOT TO SCALE

CONFIGURATION LEGEND

1. Test Laboratory
2. Spectrum Analyzer with Quasi-Peak Adapter
3. Coax interconnect from Antenna to Spectrum Analyzer
4. Receive Antenna (basic relative position)
5. Non-Conducting table 80 cm above ground plane
6. Power strip for EUT and peripherals
7. AC power for devices
8. EUT: **Transceiver Module** and Associated System

4.4. Configuration and Methods of Measurements for Radiated Emissions

Section 8 of ANSI C63.4 determines the general configuration and procedures for measuring the radiated emissions of equipment under test. Initially, the primary emission frequencies are identified inside the test lab by positioning a broadband receive antenna one meter from the EUT to locate frequencies of significant radiation. Next, the EUT and associated system are placed on a turntable on a ten meter open area test site (registered with the FCC in accord with its Rules and ANSI C63.4) and the receive antenna is located at a distance of ten meters from the EUT.

The EUT and associated system are configured to operate continuously, representing a "normally operating" mode. All significant radiated emissions are recorded when maximum radiation on each frequency is observed, in accordance with part 8 of ANSI C63.4-1992 and Section 15.33 of the FCC Rules. To ensure that the maximum emission at each discrete frequency of interest is observed, the receive antenna is varied in height from one to four meters and rotated to horizontal and vertical polarities, and the turntable is also rotated to determine the worst emitting configuration. The numerical results of the test are included herein to demonstrate compliance.

The numerical results that are applied to the emissions limits are arrived at by the following method:
Example: A=RR+CL+AF
A = Amplitude dBuV/M
RR = Receiver Reading dBuV
CL = cable loss dB
AF = antenna factor dBm-1

Example Frequency = 110MHz
18.5 dBuV (spectrum analyzer reading)
+3.0 dB (cable loss @ frequency)
21.5 dBuV
+15.4 dBm-1 (antenna factor @ frequency)
36.9 dBuV/M Final adjusted value

The final adjusted value is then compared to the appropriate emission limit to determine compliance.

For Radiated Emissions Test Configuration please refer to Figure 4 on the following page.

Figure 4. Radiated Emissions Test Setup Diagram

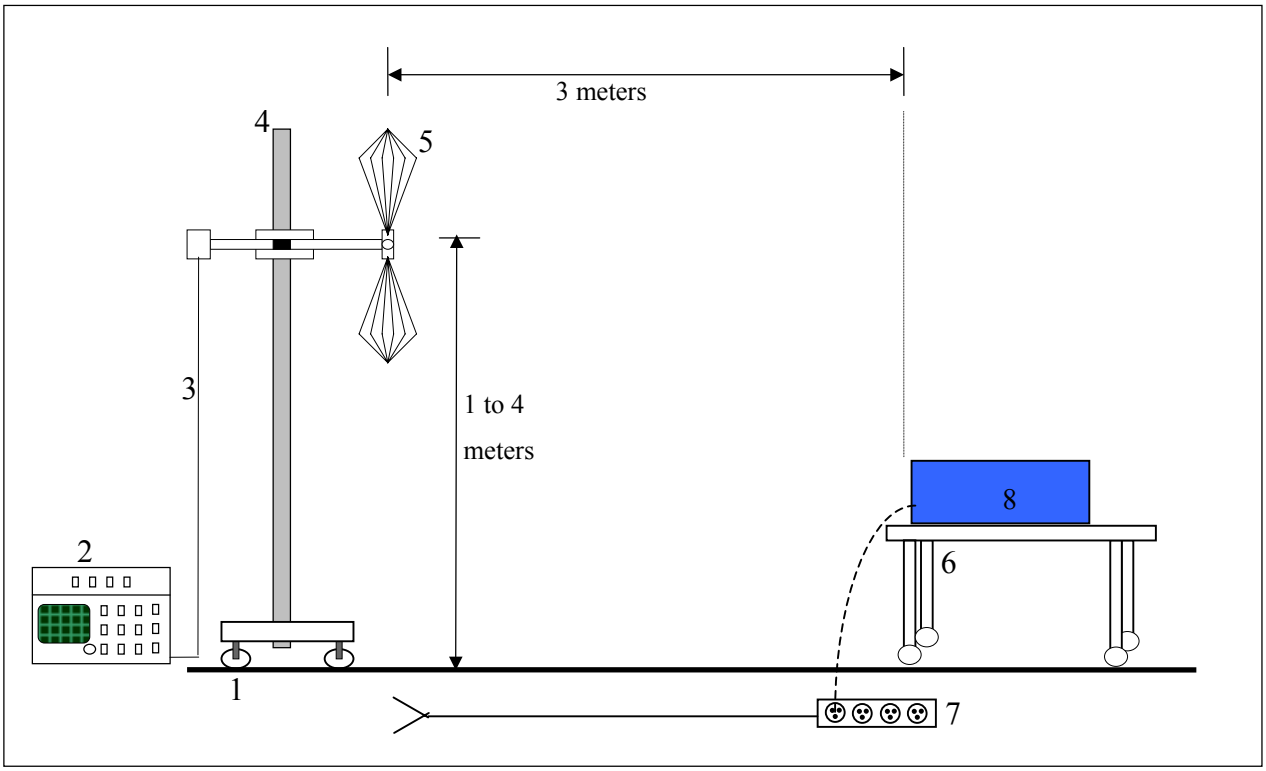

NOT TO SCALE

CONFIGURATION LEGEND

1. Ground plane (11 X 17 meters)
2. Spectrum Analyzer with Quasi-Peak Adapter
3. Coax interconnect from Receive Antenna to Spectrum Analyzer
4. Antenna Mast with motorized mounting assembly
5. Receive Antenna (basic relative position)
6. Non-Conducting table 80 cm above ground plane
7. AC power for devices
8. EUT: **Transceiver Module** and Associated System

5. TEST RESULTS

Conducted Emissions Test Data	Not Applicable

Conducted Emissions Test Equipment

Client	**Helicomm**	EUT Name	**Transceiver Module**
PAN #	24-868-HEL	EUT Model	**IP Link 1200**

Device Type	*Model #*	*Asset #*	*Used*	*Cal Done*	*Cal Due*
Filter / Limiter					
High Pass Filter, Solar	7801-50	574			
Transient Limiter, HP	11947A	682			
Transducer					
V-Network LISN, Solar	9348-50-R-24-BNC	384			
Spectrum Analyzer / Receiver					
Quasi-Peak Adapter, HP	85650A	533			
Spectrum Analyzer Display, HP	85662A	404			
Spectrum Analyzer, HP	8566B	104			

5.1. Radiated Emissions Test Data

Emissions were investigated from 30 MHz to 25000 MHz.

NEMKO USA, Inc.

San Diego Headquarters:
11696 Sorrento Valley Rd.
San Diego, CA 92121
Tel: (858) 755-5525
Fax: (858) 452-1810

Radiated Emissions Data

Complete	Yes			Job # :	24-878-HEL
Preliminary				Page	1 of 1
Client Name :	Helicomm			Test # :	1
EUT Name :	IP Link				
EUT Model # :	1200				
EUT Part # :					
EUT Serial # :	0000105				
EUT Config. :	Transmit				
Specification :	FCC Part 15.249			Reference :	
Rod. Ant. #:	NA	Temp. (deg. C) :	19	Date :	11/16/2004
Bicon Ant.#:	NA	Humidity (%) :	44	Time :	
Log Ant.#:	NA	EUT Voltage :	3.0 Vdc	Staff :	A. Laudani
DRG Ant. #	529	EUT Frequency :		Photo ID:	
Dipole Ant.#:	NA	Phase:		Peak Bandwidth:	1 MHz
Cable#:	40ft	Location:	SOATS	Video Bandwidth	1 MHz
Preamp#:	40db	Distance:	3m	Video Bandwidth	10 Hz for Average
Spec An.#:	385	Duty Cycle	.333		
QP #:	NA				
PreSelect#:	NA				

Meas. Freq. (MHz)	Vertical (dBuV) pk	Vertical (dBuV) av	Horizontal (dBuV) pk	Horizontal (dBuV) av	CF (db)	Max Level (dBuV/m) pk	Max Level (dBuV/m) av	Spec. Limit (dBuV/m) pk	Spec. Limit (dBuV/m) av	Margin dB pk	Margin dB av	EUT Rotation	Ant. Height	Pass Fail Unc.	Comment
2405	56.9	47.3	46.2	36.6	32.1	89.0	79.4	114.0	94.0	-25.0	-14.6	60	1.0	Pass	
2400	27.7	18.1	16.2	6.65	33.1	60.8	51.2	74.0	54.0	-13.2	-2.8	60	1.0	Pass	Bandedge
4810	55.3	45.7	47.7	38.1	-1.2	54.1	44.5	74.0	54.0	-19.9	-9.5	80	1.0	Pass	
7215	46.6	37.0	45.9	36.3	5.8	52.4	42.8	74.0	54.0	-21.6	-11.2		1.0	Pass	noise floor
															Rest of Harmonics =
															noise floor
2445	55.3	45.7	47.2	37.7	32.1	87.4	77.8	114.0	94.0	-26.6	-16.2	80	1.0	Pass	
4890	55.1	45.5	49.7	40.1	-1.2	53.9	44.3	74.0	54.0	-20.1	-9.7	80	1.0	Pass	
7335	45.2	35.6	47.3	37.7	5.8	53.1	43.5	74.0	54.0	-20.9	-10.5		1.0	Pass	noise floor
															Rest of Harmonics =
															noise floor
2480	54.1	44.5	48	38.4	32.1	86.2	76.6	114.0	94.0	-27.8	-17.4	80	1.0	Pass	
2483.5	25.6	16	22.5	12.9	32.1	57.7	48.1	74.0	54.0	-16.3	-5.9	80	1.0	Pass	Bandedge
4960	54.9	45.3	46.7	37.1	-1.2	53.7	44.1	74.0	54.0	-20.3	-9.9	80	1.0	Pass	
7440	38.2	28.6	35.5	25.9	5.8	44	34.4	74.0	54.0	-30.0	-19.6		1.0	Pass	noise floor
															Rest of Harmonics =
															noise floor

Duty Cycle Measurement

37 digital words

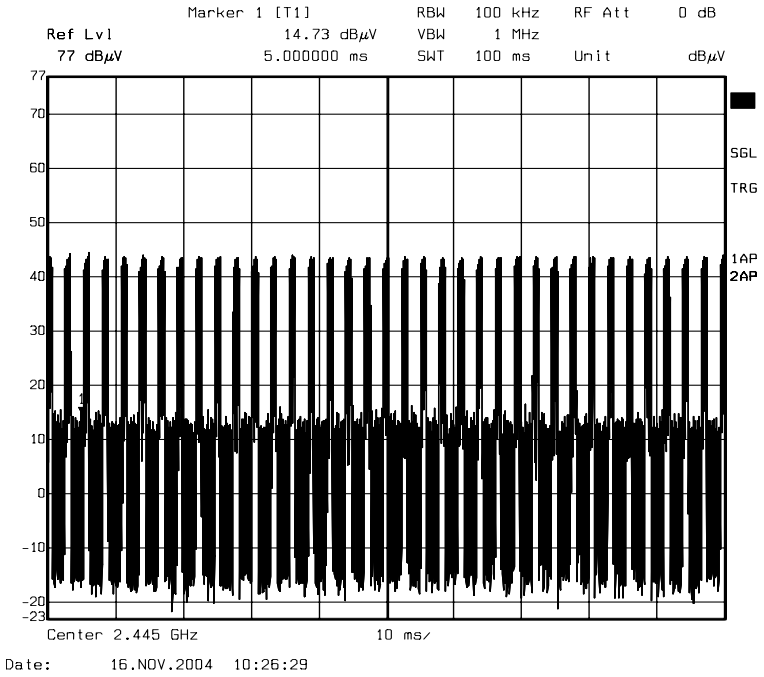

Digital Word = 901 microseconds
Duty cycle = 37 x 0.0009018 = 0.0333 seconds in 100 ms
Duty cycle = 33.3 %

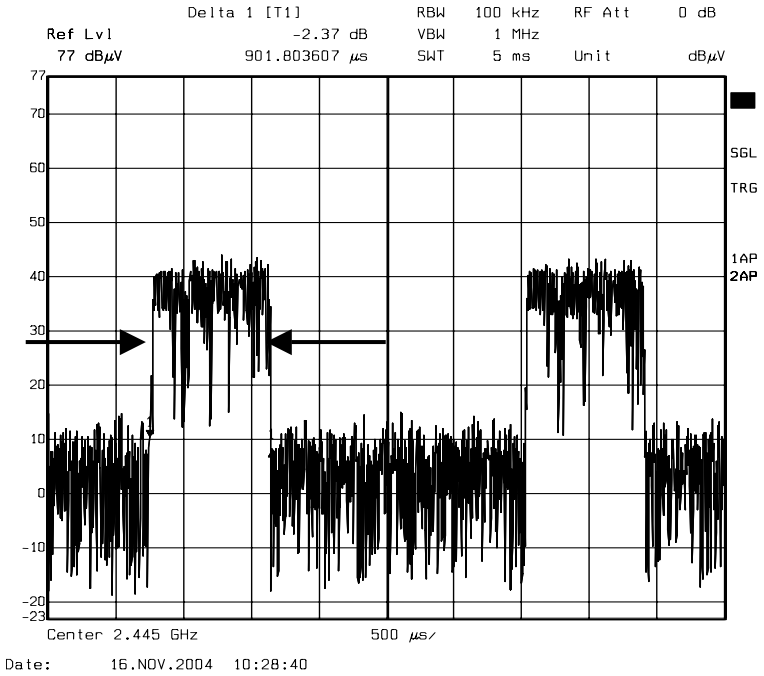

Frequency 2405 MHz; Bandwidth = 3.28 MHz

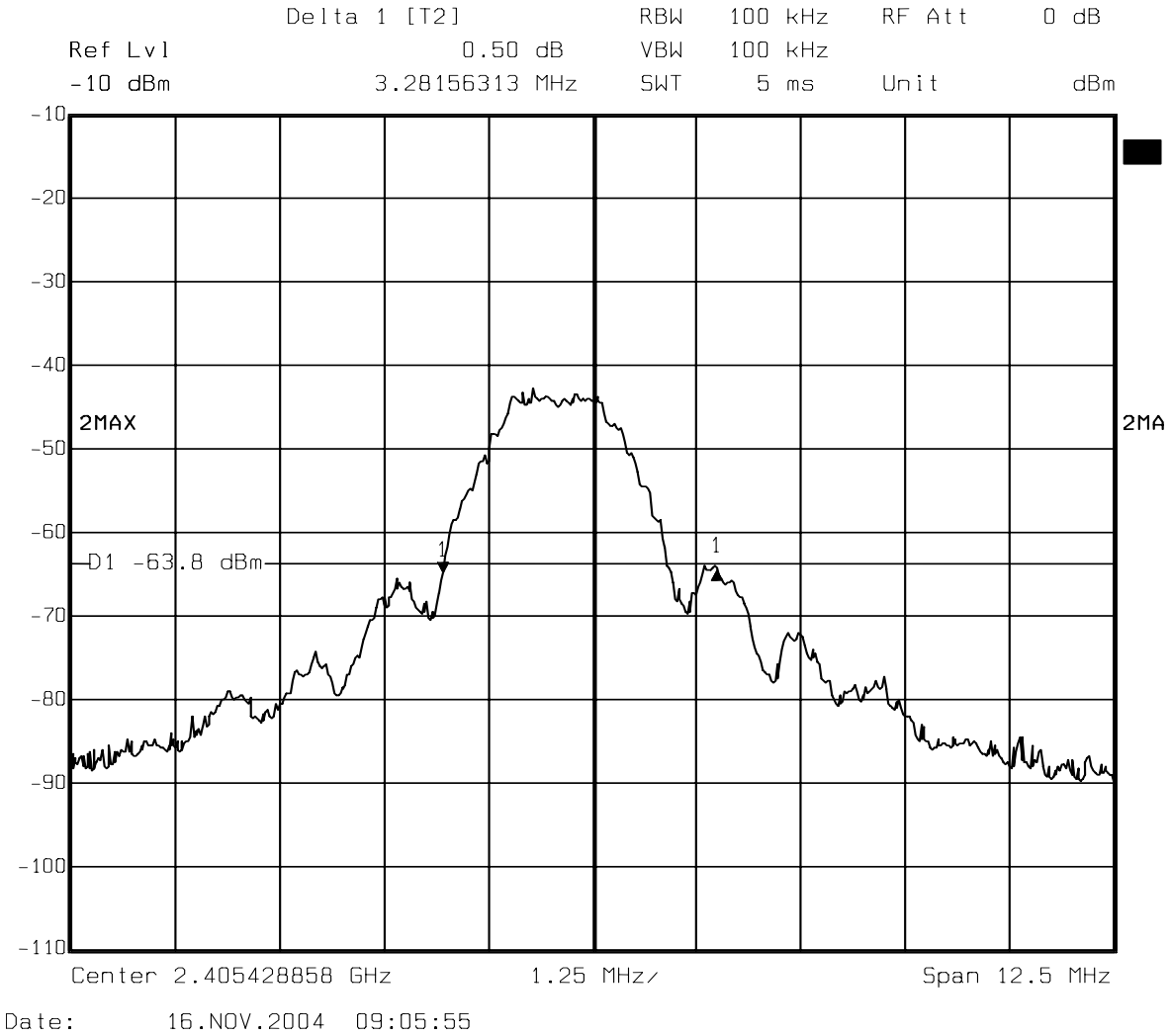

Frequency 2445 MHz; Bandwidth = 2.71 MHz

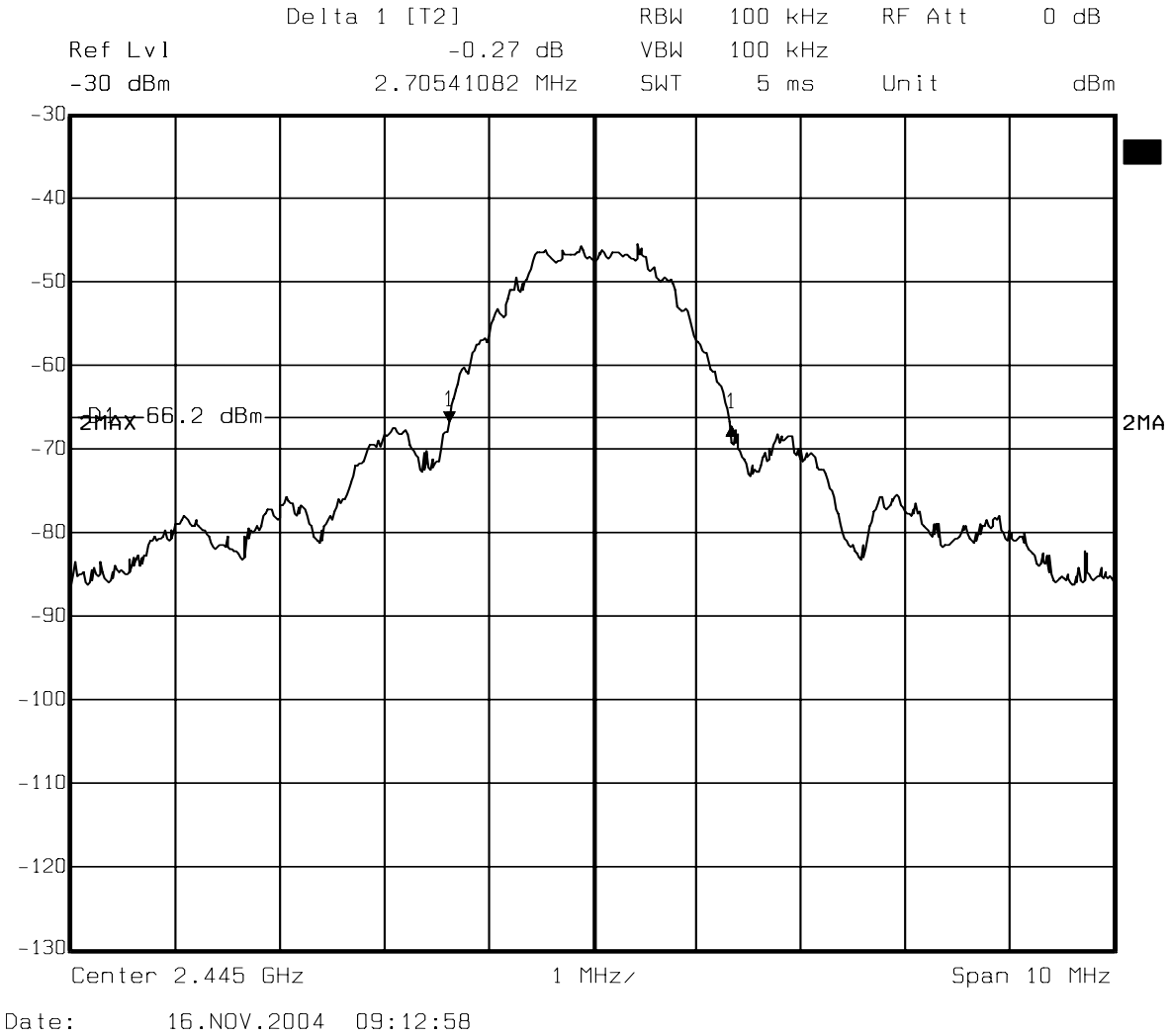

Frequency 2480 MHz; Bandwidth = 3.21 MHz

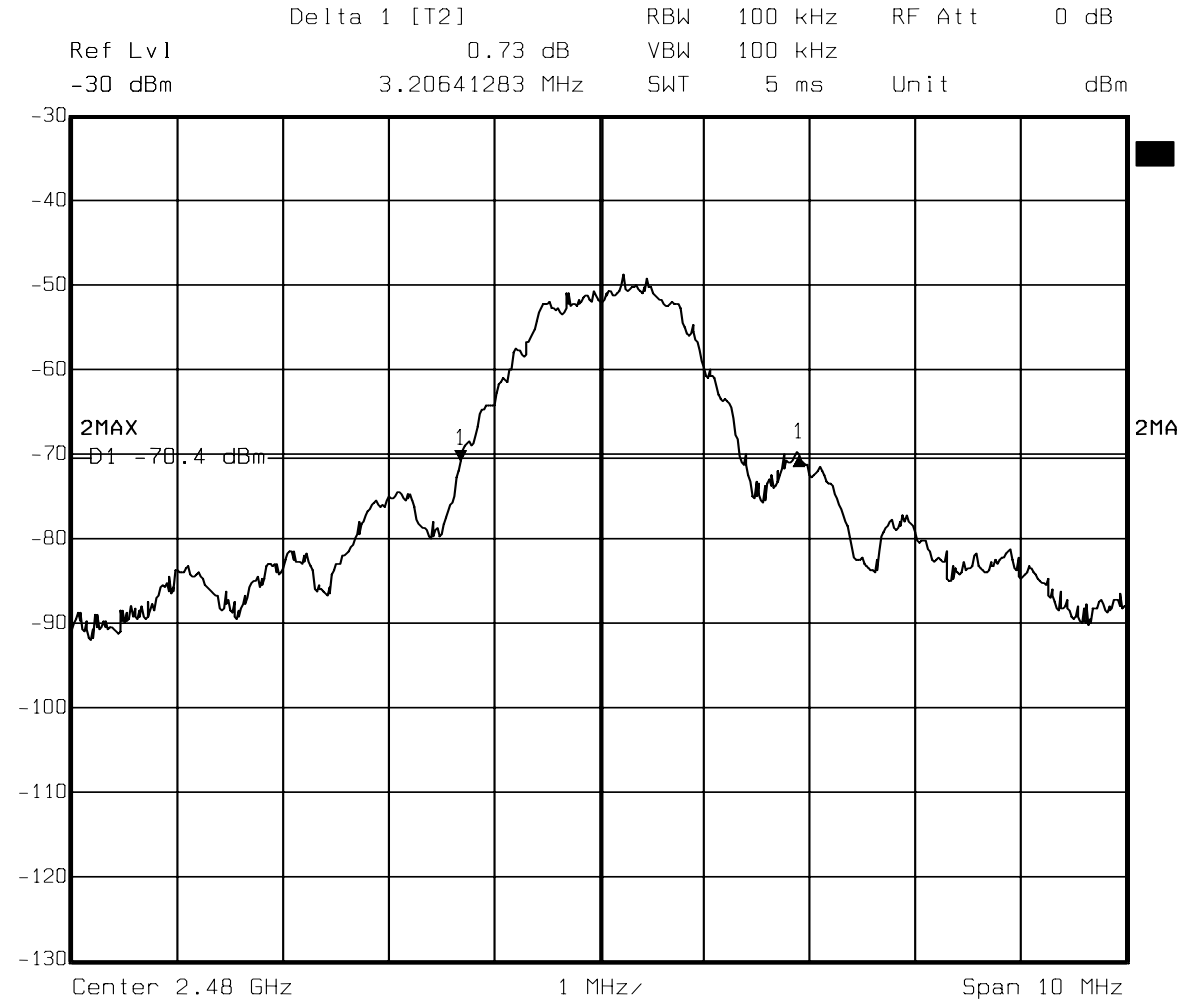

Date: 16.NOV.2004 09:17:59

Radiated Emissions Test Equipment

Client	**Helicomm**	EUT Name	**Transceiver Module**
PAN #	24-868-HEL	EUT Model	**IP Link 1200**

Device Type	*Model #*	*Asset #*	*Used*	*Cal Done*	*Cal Due*
Pre-Amplifier					
Amplifier	40dB	342	X	5/10/04	5/10/05
Antenna OATS #1 (South)					
Antenna, Ridged Guide	3115	529	X	3/30/04	3/30/05
Antenna, Log Periodic	EMCO	110	X	10/04/04	10/04/05
Spectrum Analyzer / Receiver					
Spectrum Analyzer, Rhode and Swartz	FSEK	835	X	12/11/03	12/11/04
4GHz High Pass Filter		056	X	5/10/04	5/10/05

Photograph 1. Conducted Emissions Test Configuration

No photo—not tested.

Photograph 2. Radiated Emissions Test Configuration

APPENDIX A
A. Conducted & Radiated Emissions Measurement Uncertainties

1. Introduction

ISO Standard 17025 and ANSI/NCSL Z540-1(1994) require that all measurements contained in a test report be "traceable". "Traceability" is defined in the *International Vocabulary of Basic and General Terms in Metrology* (ISO: 1993) as: "the property of the result of a measurement... whereby it can be related to stated references, usually national or international standards, through an unbroken chain of comparisons, *all having stated uncertainties*".

The purposes of this Appendix are to "state the *Measurement Uncertainties*" of the conducted emissions and radiated emissions measurements contained in Section 5 of this Test Report, and to provide a practical explanation of the meaning of these measurement uncertainties.

2. Statement of the Worst-Case Measurement Uncertainties for the Conducted and Radiated Emissions Measurements Contained in This Test Report

Table 1: Worst-Case Expanded Uncertainty "U" of Measurement for a k=2 Coverage Factor

Conducted Emissions Measurement Detection Systems	Applicable Frequency Range	"U" for a k=2 Coverage Factor
HP8568B Spectrum Analyzer with QPA and HP8447F Preamplifier	150 kHz - 30 MHz	+/- 3.0 dB
HP8566B Spectrum Analyzer with QPA and Preselector	9 kHz - 30 MHz	+/- 2.9 dB
Radiated Emissions Measurement Detection Systems	**Applicable Frequency Range**	**"U" for a k=2 Coverage Factor**
HP8568B Spectrum Analyzer with QPA & HP8447F Preamplifier	30 MHz - 200 MHz	+4.0 dB, -4.1 dB
HP8568B Spectrum Analyzer with QPA & HP8447F Preamplifier	200 MHz-1000 MHz	+/- 3.5 dB
HP8566B Spectrum Analyzer with QPA & Preselector	30 MHz - 200 MHz	+3.9 dB, -4.0 dB
HP8566B Spectrum Analyzer with QPA & Preselector	200 MHz-1000 MHz	+/- 3.4 dB
HP8566B Spectrum Analyzer with QPA & HP 8449A Preamplifier	1 GHz - 18 GHz	+2.5 dB, -2.6 dB
HP8566B Spectrum Analyzer with QPA & HP8449A Preamplifier	18 GHz - 40 GHz	+/- 3.4 dB

NOTES:
1. Applies to 3 and 10 meter measurement distances
2. Applies to all valid combinations of Transducers (i.e. LISNs, Line Voltage Probes, and Antennas, as appropriate)
3. Excludes the Repeatability of the EUT

3. Practical Explanation of the Meaning of the Conducted and Radiated Emissions Measurement Uncertainties

In general, a "Statement of Measurement Uncertainty" means that with a certain (specified) confidence level, the "true" value of a measurand will be between a (stated) upper bound and a (stated) lower bound.

In the specific case of EMC Measurements in this test report, the measurement uncertainties of the conducted emissions measurements and the radiated emissions measurements have been calculated in accordance with the method detailed in the following documents:

- *ISO Guide to the Expression of Uncertainty in Measurement* (ISO, 1993)
- NIS 81:1994, *The Treatment of Uncertainty in EMC Measurements* (NAMAS, 1994)
- NIST Technical Note 1297(1994), *Guidelines for Evaluating and Expressing the Uncertainty of NIST Measurement Results* (NIST, 1994)

The calculation method used in these documents requires that the stated uncertainty of the measurements be expressed as *an "expanded uncertainty", U, with a k=2 coverage factor*. The practical interpretation of this method of expressing measurement uncertainty is shown in the following example:

EXAMPLE: Assume that at 39.51 MHz, the (measured) radiated emissions level was equal to +26.5 dBuV/m, and that the +/- 2 standard deviations (i.e. 95% confidence level) measurement uncertainty was +/- 3.4 dB.

In the example above, the phrase "k = 2 Coverage Factor" simply means that the measurement uncertainty is stated to cover +/-2 standard deviations (i.e. a 95% confidence interval) about the measurand. The measurand is the radiated emissions measurement of +26.5 dBuV/m at 39.51 MHz, and the 95% bounds for the uncertainty are –3.4 dB to + 3.4 dB. One can thus be 95% confident that the "true" value of the radiated emissions measurement is between +23.1 dBuV/m and +29.5 dBuV/m. *In effect, this means that in the above example there is only a 2.5% chance that the "true" radiated emissions value exceeds +29.5 dBuV/m.*

APPENDIX B
B. Nemko USA, Inc.'s Test Equipment & Facilities Calibration Program

Nemko USA, Inc. operates a comprehensive Periodic Calibration Program in order to ensure the validity of all test data. Nemko USA's Periodic Calibration Program is fully compliant to the requirements of NVLAP Policy Guide PG-1-1988, ANSI/NCSL Z540-1 (1994), ISO 10012-1 (1993-05-01), ISO Standard 17025, ISO-9000 and EN 45001. Nemko USA, Inc.'s calibrations program therefore meets or exceed the US national commercial and military requirements [N.B. ANSI/NCSL Z540-1 (1994) replaces MIL-STD-45662A].

Specifically, all of Nemko USA's *primary reference standard devices* (e.g. vector voltmeters, multimeters, attenuators and terminations, RF power meters and their detector heads, oscilloscope mainframes and plug-ins, spectrum analyzers, RF preselectors, quasi-peak adapters, interference analyzers, impulse generators, signal generators and pulse/function generators, field-strength meters and their detector heads, etc.) and certain *secondary standard devices* (e.g. RF Preamplifiers used in CISPR 11/22 and FCC Part 15/18 tests) are periodically recalibrated by:

- A Nemko USA-approved independent (third party) metrology laboratory that uses NIST-traceable standards and that is ISO Guide 25-accredited as a calibration laboratories by NIST; or,
- A Nemko USA-approved independent (third party) metrology laboratory that uses NIST-traceable standards and that is ISO Guide 25-accredited as a calibration laboratory by another accreditation body (such as A2LA) that is mutually recognized by NIST; or,
- A manufacturer of Measurement and Test Equipment (M&TE), if the manufacturer uses NIST-traceable standards and is ISO Guide 25-accredited as calibration laboratory either by NIST or by another accreditation body (such as A2LA) that is mutually recognized by NIST; or
- A manufacturer of M&TE (or by a Nemko USA-approved independent third party metrology laboratory) that is not ISO Guide 25-accredited. (In these cases, Nemko USA conducts an annual audit of the manufacturer or metrology laboratory for the purposes of proving traceabilty to NIST, ensuring that adequate and repeatable calibration procedures are being applied, and verifying conformity with the other requirements of ISO Guide 25).

In all cases, the entity performing the Calibration is required to furnish Nemko USA with a calibration test report and/or certificate of calibration, and a "calibration sticker" on each item of M&TE that is successfully calibrated.

Calibration intervals are normally one year, except when the manufacture advises a shorter interval (e.g. the HP 8568B Spectrum Analyzer is recalibrated every six months) or if US Government directives or client requirements demand a shorter interval. Items of instrumentation/related equipment which fail during routine use, or which suffer visible mechanical damage (during use or while in transit), are sidelined pending repair and recalibration. (Repairs are carried out either in-house [if minor] or by a Nemko USA-approved independent [third party] metrology laboratory, or by the manufacturer of the item of M&TE).

Each antenna used for CISPR 11 and CISPR 22 and FCC Part 15 and Part 18 radiated emissions testing (and for testing to the equivalent European Norms) is calibrated annually by either a NIST (or A2LA) ISO Standard 17025-Accredited third-party Antenna Calibration Laboratory or by the antenna's OEM if the OEM is NIST or A2LA ISO Standard 17025-accredited as an antenna calibration laboratory. The antenna calibrations are performed using the methods specified in Annex G.5 of CISPR 16-1(1993) or ANSI C63.5-1991, including the "Three-Antenna Method". Certain other kinds of antennas (e.g. magnetic-shielded loop antennas) are calibrated annually by either a NIST (or A2LA) ISO Standard 17025-accredited third-party antenna calibration laboratory, or by the antenna's OEM if the OEM is NIST or A2LA ISO Standard 17025-accredited as an antenna calibration laboratory using the procedures specified in the latest version of SAE ARP-958.

In accordance with FCC and other regulations, Nemko USA recalibrates its suite of antennas used for radiated emissions tests on an annual basis. These calibrations are performed as a precursor to the FCC-required annual revalidation of the Normalized Site Attenuation properties of Nemko USA's Open Area Test Site. Nemko USA, Inc. uses the procedures given in both Subclause 16.6 and Annex G.2 of CISPR 16-1 (1993), and, ANSI C63.4-1992 when performing the normalized site attenuation measurements.

APPENDIX C
C. NVLAP Accreditation

United States Department of Commerce
National Institute of Standards and Technology

NVLAP®

DEPARTMENT OF COMMERCE ★ UNITED STATES OF AMERICA ★

ISO/IEC 17025:1999
ISO 9002:1994

Certificate of Accreditation

NEMKO USA, INC. - SAN DIEGO EMC DIVISION
SAN DIEGO, CA

is recognized by the National Voluntary Laboratory Accreditation Program for satisfactory compliance with criteria set forth in NIST Handbook 150:2001, all requirements of ISO/IEC 17025:1999, and relevant requirements of ISO 9002:1994. Accreditation is awarded for specific services, listed on the Scope of Accreditation, for:

ELECTROMAGNETIC COMPATIBILITY AND TELECOMMUNICATIONS

December 31, 2004
Effective through

For the National Institute of Standards and Technology
NVLAP Lab Code: 200116-0

NVLAP-01C (06-01)

National Institute of Standards and Technology — NVLAP® — National Voluntary Laboratory Accreditation Program

ISO/IEC 17025:1999
ISO 9002:1994

Scope of Accreditation

Page: 1 of 3

ELECTROMAGNETIC COMPATIBILITY AND TELECOMMUNICATIONS

NVLAP LAB CODE 200116-0

NEMKO USA, INC. - SAN DIEGO EMC DIVISION
11696 Sorrento Valley Road, Suite F
San Diego, CA 92121
Mr. Ricky Hill
Phone: 858-755-5525 x207 Fax: 858-793-9914
E-Mail: rick.hill@nemko.com
URL: http://www.nemko.com

NVLAP Code	*Designation / Description*
Emissions Test Methods:	
12/CIS14	CISPR 14-1 (March 30, 2000): Limits and Methods of Measurement of Radio interference Characteristics of Household Electrical Appliances, Portable Tools and Similiar Electrical Apparatus - Part 1: Emissions
12/CIS14a	EN 55014-1 (1993) with Amendments A1 (1997) & A2 (1999)
12/CIS14b	AS/NZS 1044 (1995)
12/CIS14c	CNS 13783-1
12/CIS22	IEC/CISPR 22 (1997) and EN 55022 (1998): Limits and methods of measurement of radio disturbance characteristics of information technology equipment
12/CIS22a	IEC/CISPR 22 (1993): Limits and methods of measurement of radio disturbance characteristics of information technology equipment, Amendment 1 (1995) and Amendment 2 (1996)

December 31, 2004
Effective through

For the National Institute of Standards and Technology

NVLAP-01S (06-01)

National Institute of Standards and Technology — NVLAP® — National Voluntary Laboratory Accreditation Program

ISO/IEC 17025:1999
ISO 9002:1994

Scope of Accreditation

Page: 2 of 3

ELECTROMAGNETIC COMPATIBILITY AND TELECOMMUNICATIONS

NVLAP LAB CODE 200116-0

NEMKO USA, INC. - SAN DIEGO EMC DIVISION

NVLAP Code	*Designation / Description*
12/CIS22b	CNS 13438 (1997): Limits and Methods of Measurement of Radio Interference Characteristics of Information Technology Equipment
12/EM02a	IEC 61000-3-2, Edition 2.1 (2001-10), EN 61000-3-2 (2000), and AS/NZS 2279.1 (2000): Electromagnetic compatibility (EMC) Part 3-2: Limits - Limits for harmonic current emissions (equipment input current <= 16 A)
12/EM03b	IEC 61000-3-3 (2002-03), edition 1.1: EMC - Part 3-3: Limits - Limitations of voltage changes, voltage flucuations and flicker, in public low-voltage supply-systems, for equipment with rated current <=16 A per phase and not subject to conditional connections
12/F18	FCC OST/MP-5 (1986): FCC Methods of Measurement of Radio Noise Emissions for ISM Equipment (cited in FCC Method 47 CFR Part 18 - Industrial, Scientific, and Medical Equipment)
12/FCC15b	ANSI C63.4 (2001) with FCC Method - 47 CFR Part 15, Subpart B: Unintentional Radiators
12/T51	AS/NZS CISPR 22 (2002) and AS/NZS 3548 (1997): Electromagnetic Interference - Limits and Methods of Measurement of Information Technology Equipment

December 31, 2004

Effective through

For the National Institute of Standards and Technology

NVLAP-01S (06-01)

National Institute of Standards and Technology — NVLAP® — National Voluntary Laboratory Accreditation Program

ISO/IEC 17025:1999
ISO 9002:1994

Scope of Accreditation

Page: 3 of 3

ELECTROMAGNETIC COMPATIBILITY AND TELECOMMUNICATIONS — **NVLAP LAB CODE 200116-0**

NEMKO USA, INC. - SAN DIEGO EMC DIVISION

NVLAP Code	*Designation / Description*
Immunity Test Methods:	
12/I01	IEC 61000-4-2, Edition 2.1 (2001) including Amds. 1 & 2 and EN 61000-4-2: Electrostatic Discharge Immunity Test
12/I02	IEC 61000-4-3 (2002) and EN 61000-4-3: Radiated Radio-Frequency Electromagnetic Field Immunity Test
12/I03	IEC 61000-4-4 (1995) + Amd. 1 (2000) & Amd. 2 (2001) and EN 61000-4-4: Electrical Fast Transient/Burst Immunity Test
12/I04	IEC 61000-4-5 (1995) + Amd. 1 (2000) and EN 61000-4-5: Surge Immunity Test
12/I05	IEC 61000-4-6, Edition 2.0 (2003) and EN 61000-4-6: Immunity to Conducted Disturbances, Induced by Radio-Frequency Fields
12/I06	IEC 61000-4-8, Edition 1.1 (2001) and EN 61000-4-8: Power Frequency Magnetic Field Immunity Test
12/I07	IEC 61000-4-11 (1994) + Amd. 1 (2000) and EN 61000-4-11: Voltage Dips, Short Interruptions and Voltage Variations Immunity Tests

December 31, 2004
Effective through

For the National Institute of Standards and Technology

NVLAP-01S (06-01)