#01_WCDMA II_RMC 12.2Kbps_Left Cheek_Ch9262

Communication System: WCDMA; Frequency: 1852.4 MHz;Duty Cycle: 1:1
Medium: HSL_1900_210910 Medium parameters used : f = 1852.4 MHz; σ = 1.411 S/m; ε_r = 39.579; ρ = 1000 kg/m^3
Ambient Temperature：23.4 ℃; Liquid Temperature：22.4 ℃

DASY5 Configuration:
- Probe: EX3DV4 - SN7590; ConvF(8.65, 8.65, 8.65) @ 1852.4 MHz; Calibrated: 2021/3/25
- Sensor-Surface: 1.4mm (Mechanical Surface Detection)
- Electronics: DAE4 Sn1424; Calibrated: 2021/1/19
- Phantom: SAM-Middle; Type: SAM; Serial: TP-1503
- Measurement SW: DASY52, Version 52.10 (4);SEMCAD X Version 14.6.14 (7483)

Area Scan (71x131x1): Interpolated grid: dx=1.500 mm, dy=1.500 mm
Maximum value of SAR (interpolated) = 0.0853 W/kg

Zoom Scan (5x5x7)/Cube 0: Measurement grid: dx=8mm, dy=8mm, dz=5mm
Reference Value = 7.052 V/m; Power Drift = -0.12 dB
Peak SAR (extrapolated) = 0.0850 W/kg
SAR(1 g) = 0.058 W/kg; SAR(10 g) = 0.038 W/kg
Maximum value of SAR (measured) = 0.0745 W/kg

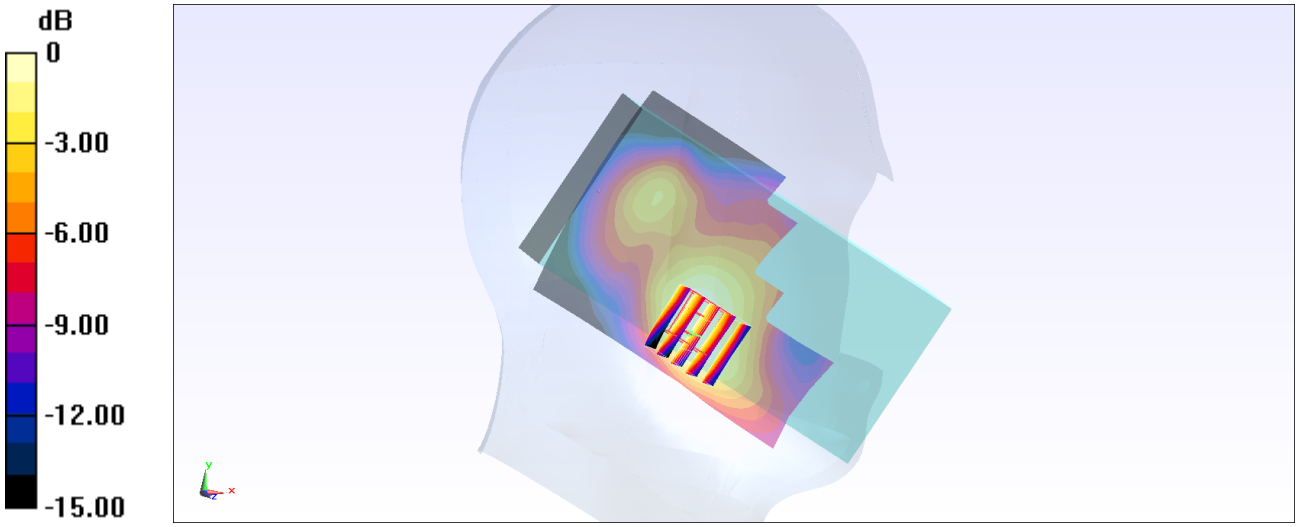

0 dB = 0.0745 W/kg = -11.28 dBW/kg

#02_WCDMA V_RMC 12.2Kbps_Left Cheek_Ch4182

Communication System: WCDMA; Frequency: 836.4 MHz;Duty Cycle: 1:1
Medium: HSL_850_210826 Medium parameters used : f = 836.4 MHz; σ = 0.908 S/m; ε_r = 42.515; ρ = 1000 kg/m^3
Ambient Temperature：23.3 ℃; Liquid Temperature：22.3 ℃

DASY5 Configuration:
- Probe: EX3DV4 - SN7590; ConvF(10.73, 10.73, 10.73) @ 836.4 MHz; Calibrated: 2021/3/25
- Sensor-Surface: 1.4mm (Mechanical Surface Detection)
- Electronics: DAE4 Sn1424; Calibrated: 2021/1/19
- Phantom: SAM-Middle; Type: SAM; Serial: TP-1503
- Measurement SW: DASY52, Version 52.10 (4);SEMCAD X Version 14.6.14 (7483)

Area Scan (71x141x1): Interpolated grid: dx=1.500 mm, dy=1.500 mm
Maximum value of SAR (interpolated) = 0.372 W/kg

Zoom Scan (5x5x7)/Cube 0: Measurement grid: dx=8mm, dy=8mm, dz=5mm
Reference Value = 18.62 V/m; Power Drift = -0.06 dB
Peak SAR (extrapolated) = 0.396 W/kg
SAR(1 g) = 0.317 W/kg; SAR(10 g) = 0.251 W/kg
Maximum value of SAR (measured) = 0.366 W/kg

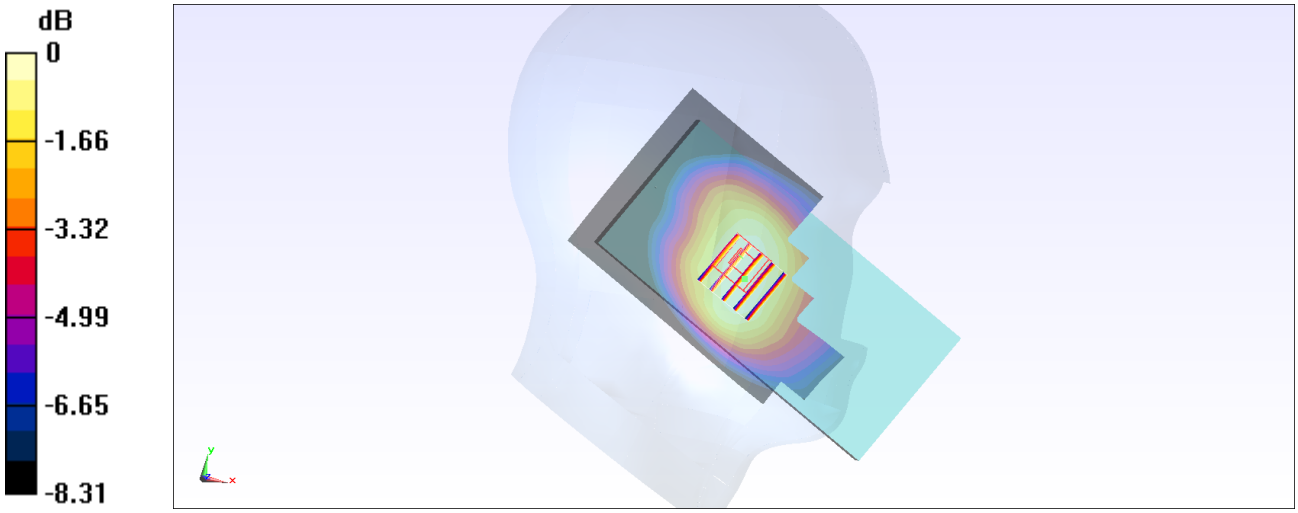

0 dB = 0.366 W/kg = -4.37 dBW/kg

#03_LTE Band 2_20M_QPSK_1_49_Left Cheek_Ch18900

Communication System: LTE; Frequency: 1880 MHz;Duty Cycle: 1:1
Medium: HSL_1900_210910 Medium parameters used: f = 1880 MHz; σ = 1.432 S/m; ε_r = 39.579; ρ = 1000 kg/m^3
Ambient Temperature：23.4 ℃; Liquid Temperature：22.4 ℃

DASY5 Configuration:
- Probe: EX3DV4 - SN7590; ConvF(8.65, 8.65, 8.65) @ 1880 MHz; Calibrated: 2021/3/25
- Sensor-Surface: 1.4mm (Mechanical Surface Detection)
- Electronics: DAE4 Sn1424; Calibrated: 2021/1/19
- Phantom: SAM-Middle; Type: SAM; Serial: TP-1503
- Measurement SW: DASY52, Version 52.10 (4);SEMCAD X Version 14.6.14 (7483)

Area Scan (71x131x1): Interpolated grid: dx=1.500 mm, dy=1.500 mm
Maximum value of SAR (interpolated) = 0.0479 W/kg

Zoom Scan (5x5x7)/Cube 0: Measurement grid: dx=8mm, dy=8mm, dz=5mm
Reference Value = 5.140 V/m; Power Drift = -0.08 dB
Peak SAR (extrapolated) = 0.0460 W/kg
SAR(1 g) = 0.032 W/kg; SAR(10 g) = 0.021 W/kg
Maximum value of SAR (measured) = 0.0406 W/kg

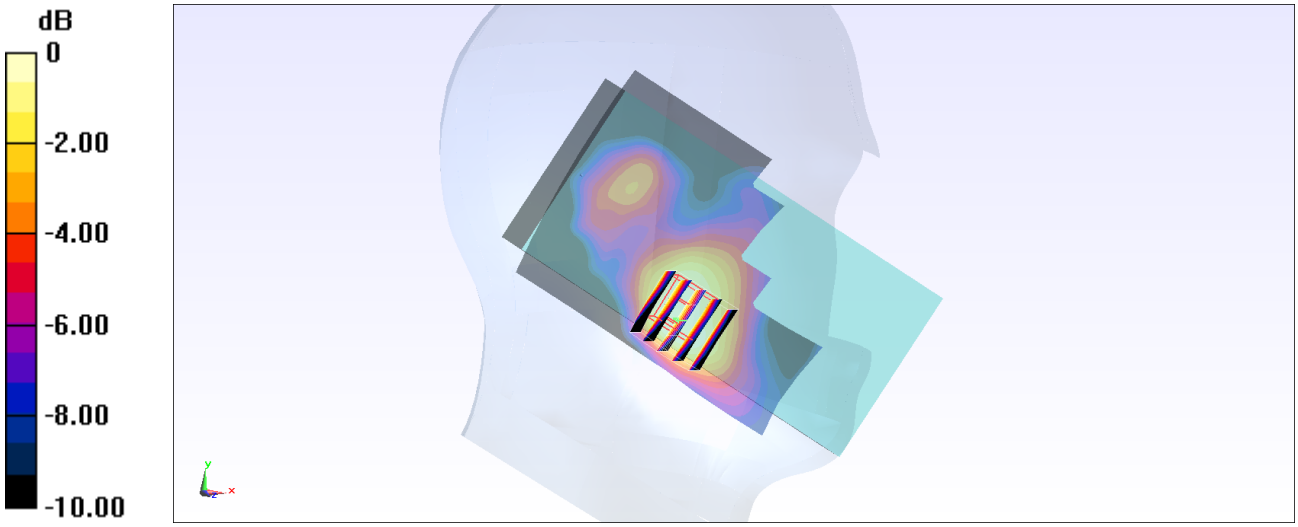

0 dB = 0.0406 W/kg = -13.91 dBW/kg

#04_LTE Band 4_20M_QPSK_1_49_Left Cheek_Ch20175

Communication System: LTE; Frequency: 1732.5 MHz;Duty Cycle: 1:1
Medium: HSL_1750_210825 Medium parameters used: f = 1733 MHz; σ = 1.362 S/m; ε_r = 41.836; ρ = 1000 kg/m^3
Ambient Temperature：23.6 ℃; Liquid Temperature：22.6 ℃

DASY5 Configuration:
- Probe: EX3DV4 - SN7590; ConvF(8.84, 8.84, 8.84) @ 1732.5 MHz; Calibrated: 2021/3/25
- Sensor-Surface: 1.4mm (Mechanical Surface Detection)
- Electronics: DAE4 Sn1424; Calibrated: 2021/1/19
- Phantom: SAM-Middle; Type: SAM; Serial: TP-1503
- Measurement SW: DASY52, Version 52.10 (4);SEMCAD X Version 14.6.14 (7483)

Area Scan (71x131x1): Interpolated grid: dx=1.500 mm, dy=1.500 mm
Maximum value of SAR (interpolated) = 0.417 W/kg

Zoom Scan (5x5x7)/Cube 0: Measurement grid: dx=8mm, dy=8mm, dz=5mm
Reference Value = 13.87 V/m; Power Drift = -0.17 dB
Peak SAR (extrapolated) = 0.403 W/kg
SAR(1 g) = 0.265 W/kg; SAR(10 g) = 0.173 W/kg
Maximum value of SAR (measured) = 0.336 W/kg

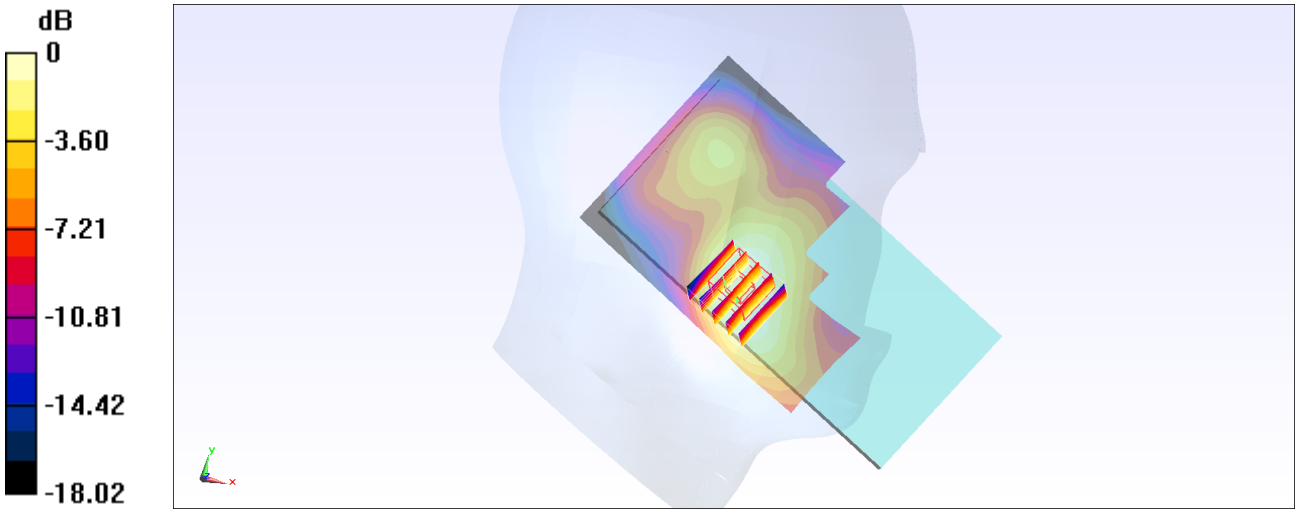

0 dB = 0.336 W/kg = -4.74 dBW/kg

#05_LTE Band 5_10M_QPSK_1_25_Left Cheek_Ch20525

Communication System: LTE; Frequency: 836.5 MHz;Duty Cycle: 1:1
Medium: HSL_850_210826 Medium parameters used : f = 836.5 MHz; σ = 0.909 S/m; ε_r = 42.513; ρ = 1000 kg/m^3
Ambient Temperature：23.3 ℃; Liquid Temperature：22.3 ℃

DASY5 Configuration:
- Probe: EX3DV4 - SN7590; ConvF(10.73, 10.73, 10.73) @ 836.5 MHz; Calibrated: 2021/3/25
- Sensor-Surface: 1.4mm (Mechanical Surface Detection)
- Electronics: DAE4 Sn1424; Calibrated: 2021/1/19
- Phantom: SAM-Middle; Type: SAM; Serial: TP-1503
- Measurement SW: DASY52, Version 52.10 (4);SEMCAD X Version 14.6.14 (7483)

Area Scan (71x131x1): Interpolated grid: dx=1.500 mm, dy=1.500 mm
Maximum value of SAR (interpolated) = 0.291 W/kg

Zoom Scan (5x5x7)/Cube 0: Measurement grid: dx=8mm, dy=8mm, dz=5mm
Reference Value = 17.96 V/m; Power Drift = -0.11 dB
Peak SAR (extrapolated) = 0.315 W/kg
SAR(1 g) = 0.255 W/kg; SAR(10 g) = 0.202 W/kg
Maximum value of SAR (measured) = 0.296 W/kg

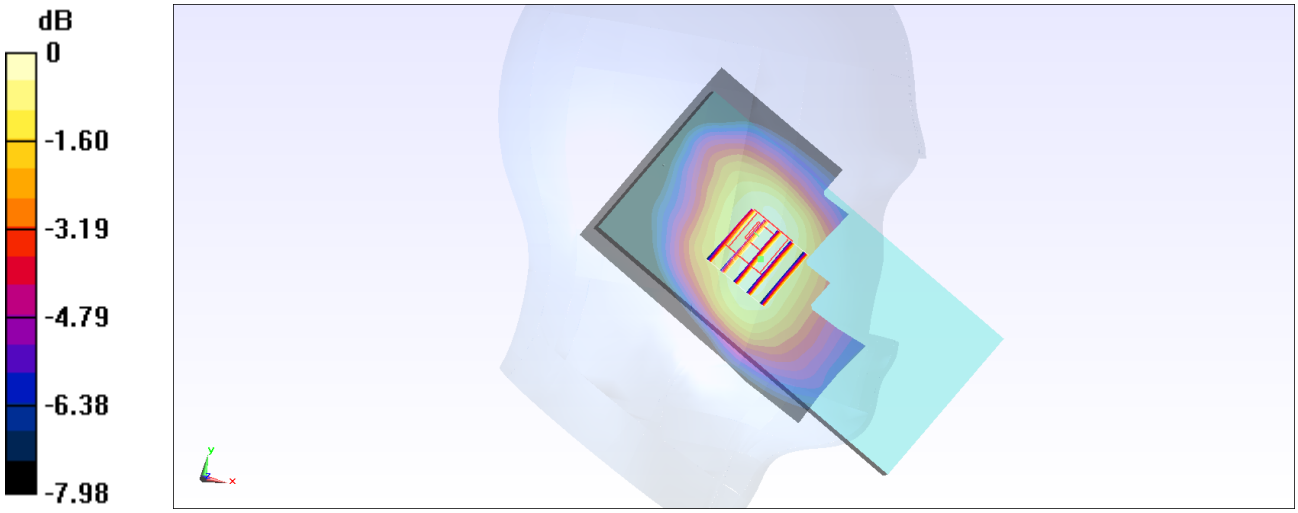

0 dB = 0.296 W/kg = -5.29 dBW/kg

#06_LTE Band 41_20M_QPSK_1_49_Left Cheek_Ch40340

Communication System: LTE; Frequency: 2565 MHz;Duty Cycle: 1:1.59
Medium: HSL_2600_210825 Medium parameters used : f = 2565 MHz; σ = 1.9 S/m; ε_r = 39.218; ρ = 1000 kg/m^3
Ambient Temperature：23.6 ℃; Liquid Temperature：22.6 ℃

DASY5 Configuration:
- Probe: EX3DV4 - SN7590; ConvF(7.69, 7.69, 7.69) @ 2565 MHz; Calibrated: 2021/3/25
- Sensor-Surface: 1.4mm (Mechanical Surface Detection)
- Electronics: DAE4 Sn1424; Calibrated: 2021/1/19
- Phantom: SAM-Middle; Type: SAM; Serial: TP-1503
- Measurement SW: DASY52, Version 52.10 (4);SEMCAD X Version 14.6.14 (7483)

Area Scan (91x161x1): Interpolated grid: dx=1.200 mm, dy=1.200 mm
Maximum value of SAR (interpolated) = 0.0231 W/kg

Zoom Scan (7x7x7)/Cube 0: Measurement grid: dx=5mm, dy=5mm, dz=5mm
Reference Value = 2.680 V/m; Power Drift = -0.03 dB
Peak SAR (extrapolated) = 0.0260 W/kg
SAR(1 g) = 0.013 W/kg; SAR(10 g) = 0.001
Maximum value of SAR (measured) = 0.0257 W/kg

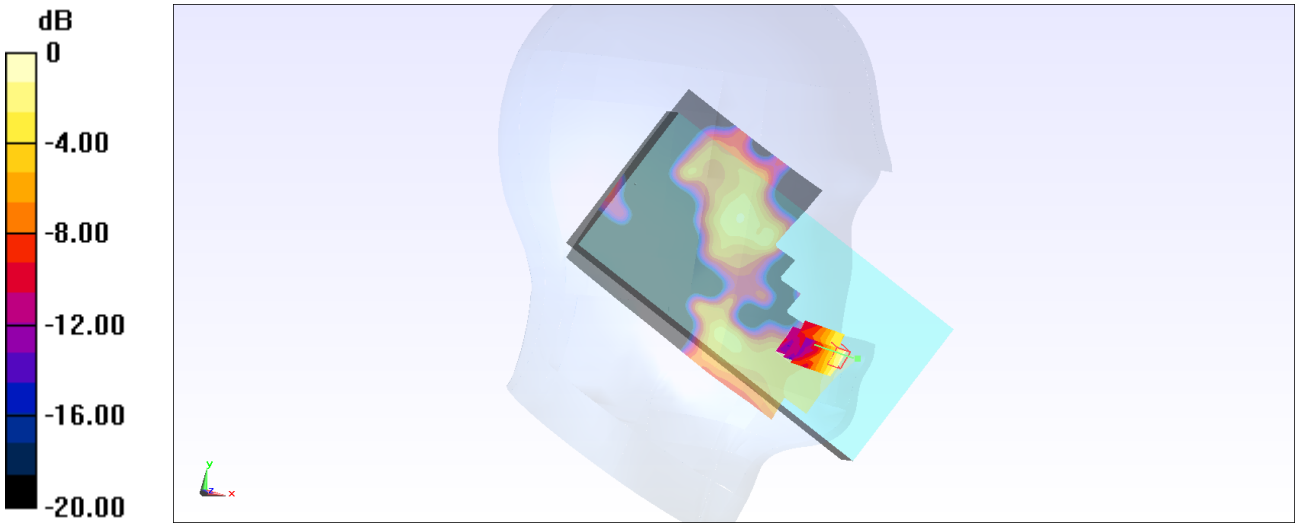

0 dB = 0.0257 W/kg = -15.90 dBW/kg

#07_WLAN2.4GHz_802.11b 1Mbps_Right Cheek_Ch6

Communication System: 802.11b; Frequency: 2437 MHz;Duty Cycle: 1:1
Medium: HSL_2450_210827 Medium parameters used : f = 2437 MHz; σ = 1.75 S/m; ε_r = 38.564; ρ = 1000 kg/m^3
Ambient Temperature：23.9 ℃; Liquid Temperature：22.9 ℃

DASY5 Configuration:
- Probe: EX3DV4 - SN7590; ConvF(7.94, 7.94, 7.94) @ 2437 MHz; Calibrated: 2021/3/25
- Sensor-Surface: 1.4mm (Mechanical Surface Detection)
- Electronics: DAE4 Sn1424; Calibrated: 2021/1/19
- Phantom: SAM-Middle; Type: SAM; Serial: TP-1503
- Measurement SW: DASY52, Version 52.10 (4);SEMCAD X Version 14.6.14 (7483)

Area Scan (101x171x1): Interpolated grid: dx=1.200 mm, dy=1.200 mm
Maximum value of SAR (interpolated) = 0.0978 W/kg

Zoom Scan (7x7x7)/Cube 0: Measurement grid: dx=5mm, dy=5mm, dz=5mm
Reference Value = 7.538 V/m; Power Drift = -0.04 dB
Peak SAR (extrapolated) = 0.119 W/kg
SAR(1 g) = 0.059 W/kg; SAR(10 g) = 0.028 W/kg
Maximum value of SAR (measured) = 0.0917 W/kg

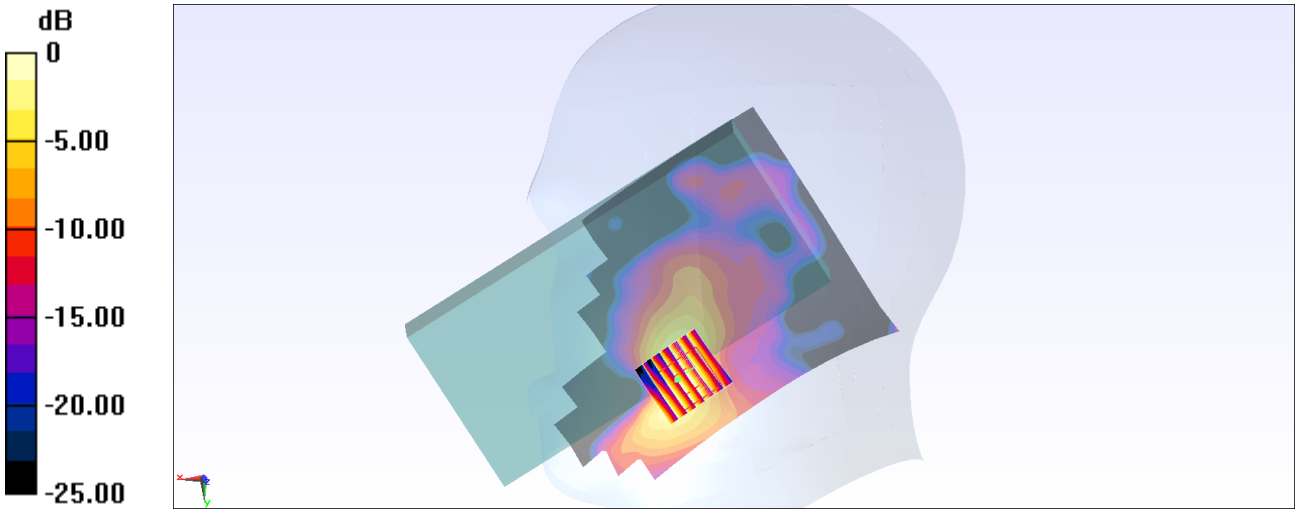

0 dB = 0.0978 W/kg = -10.10 dBW/kg

#08_WLAN5GHz_802.11n-HT40 MCS0_Right Cheek_Ch62

Communication System: 802.11n ; Frequency: 5310 MHz;Duty Cycle: 1:1.053
Medium: HSL_5G_210828 Medium parameters used: f = 5310 MHz; σ = 4.888 S/m; ε_r = 37.177; ρ = 1000 kg/m^3
Ambient Temperature：23.9 ℃; Liquid Temperature：22.9 ℃

DASY5 Configuration:
- Probe: EX3DV4 - SN7590; ConvF(5.54, 5.54, 5.54) @ 5310 MHz; Calibrated: 2021/3/25
- Sensor-Surface: 1.4mm (Mechanical Surface Detection)
- Electronics: DAE4 Sn1424; Calibrated: 2021/1/19
- Phantom: SAM_Left; Type: SAM; Serial: TP:1479
- Measurement SW: DASY52, Version 52.10 (4);SEMCAD X Version 14.6.14 (7483)

Area Scan (101x161x1): Interpolated grid: dx=1.000 mm, dy=1.000 mm
Maximum value of SAR (interpolated) = 0.343 W/kg

Zoom Scan (8x8x7)/Cube 0: Measurement grid: dx=4mm, dy=4mm, dz=1.4mm
Reference Value = 5.970 V/m; Power Drift = 0.15 dB
Peak SAR (extrapolated) = 0.547 W/kg
SAR(1 g) = 0.140 W/kg; SAR(10 g) = 0.041 W/kg
Maximum value of SAR (measured) = 0.342 W/kg

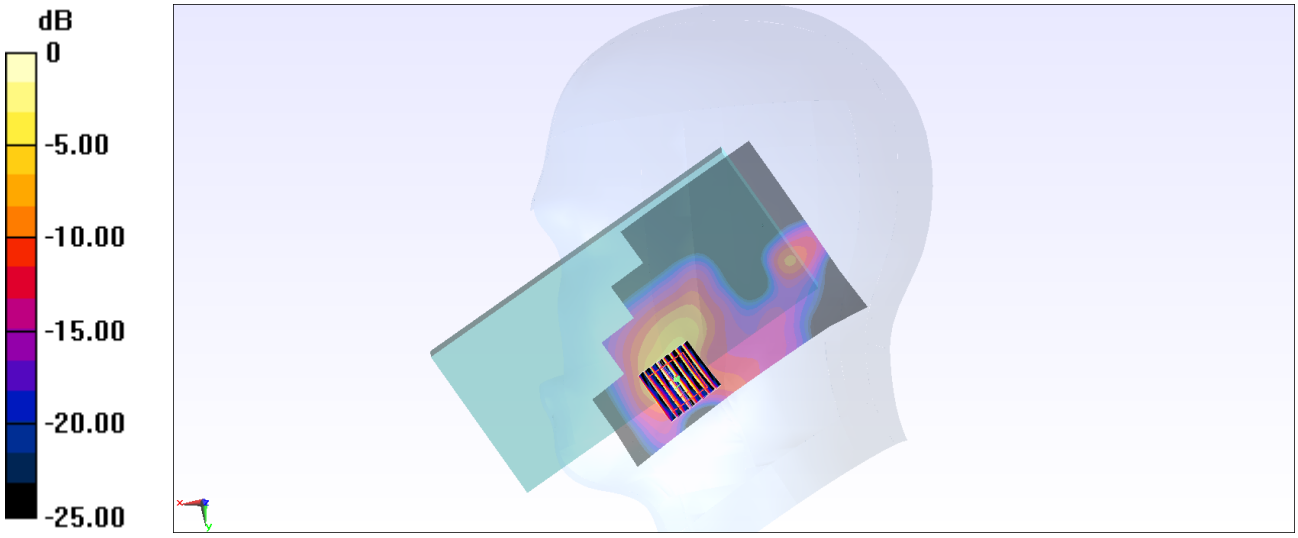

0 dB = 0.343 W/kg = -4.65 dBW/kg

#09_Bluetooth_1Mbps_Right Cheek_Ch39

Communication System: Bluetooth ; Frequency: 2441 MHz;Duty Cycle: 1:1.282
Medium: HSL_2450_210827 Medium parameters used : f = 2441 MHz; σ = 1.752 S/m; ε_r = 38.555; ρ = 1000 kg/m^3
Ambient Temperature：23.9 ℃; Liquid Temperature：22.9 ℃

DASY5 Configuration:
- Probe: EX3DV4 - SN7590; ConvF(7.94, 7.94, 7.94) @ 2441 MHz; Calibrated: 2021/3/25
- Sensor-Surface: 1.4mm (Mechanical Surface Detection)
- Electronics: DAE4 Sn1424; Calibrated: 2021/1/19
- Phantom: SAM-Middle; Type: SAM; Serial: TP-1503
- Measurement SW: DASY52, Version 52.10 (4);SEMCAD X Version 14.6.14 (7483)

Area Scan (91x171x1): Interpolated grid: dx=1.200 mm, dy=1.200 mm
Maximum value of SAR (interpolated) = 0.0338 W/kg

Zoom Scan (7x7x7)/Cube 0: Measurement grid: dx=5mm, dy=5mm, dz=5mm
Reference Value = 3.665 V/m; Power Drift = -0.14 dB
Peak SAR (extrapolated) = 0.0420 W/kg
SAR(1 g) = 0.020 W/kg; SAR(10 g) = 0.00953 W/kg
Maximum value of SAR (measured) = 0.0333 W/kg

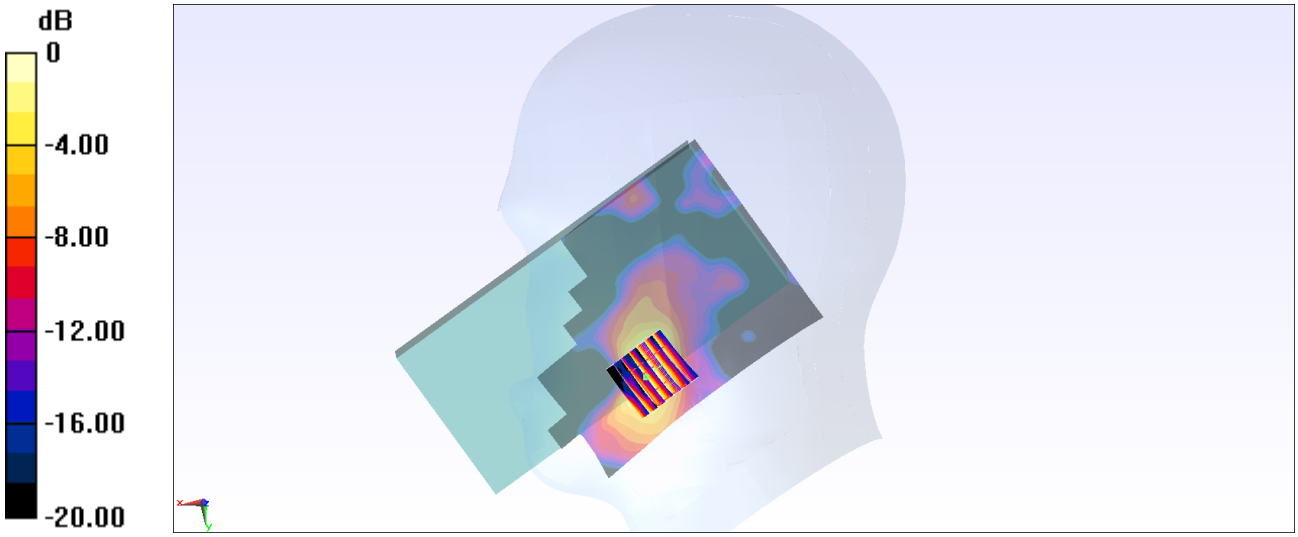

0 dB = 0.0338 W/kg = -14.71 dBW/kg

#10_WCDMA II_RMC 12.2Kbps_Bottom Side_10mm_Ch9262

Communication System: WCDMA; Frequency: 1852.4 MHz;Duty Cycle: 1:1
Medium: HSL_1900_210910 Medium parameters used : f = 1852.4 MHz; σ = 1.411 S/m; ε_r = 39.579; ρ = 1000 kg/m^3
Ambient Temperature：23.4 ℃; Liquid Temperature：22.4 ℃

DASY5 Configuration:
- Probe: EX3DV4 - SN7590; ConvF(8.65, 8.65, 8.65) @ 1852.4 MHz; Calibrated: 2021/3/25
- Sensor-Surface: 1.4mm (Mechanical Surface Detection)
- Electronics: DAE4 Sn1424; Calibrated: 2021/1/19
- Phantom: SAM-Middle; Type: SAM; Serial: TP-1503
- Measurement SW: DASY52, Version 52.10 (4);SEMCAD X Version 14.6.14 (7483)

Area Scan (61x71x1): Interpolated grid: dx=1.500 mm, dy=1.500 mm
Maximum value of SAR (interpolated) = 1.61 W/kg

Zoom Scan (5x5x7)/Cube 0: Measurement grid: dx=8mm, dy=8mm, dz=5mm
Reference Value = 33.09 V/m; Power Drift = -0.05 dB
Peak SAR (extrapolated) = 1.82 W/kg
SAR(1 g) = 1.05 W/kg; SAR(10 g) = 0.567 W/kg
Maximum value of SAR (measured) = 1.54 W/kg

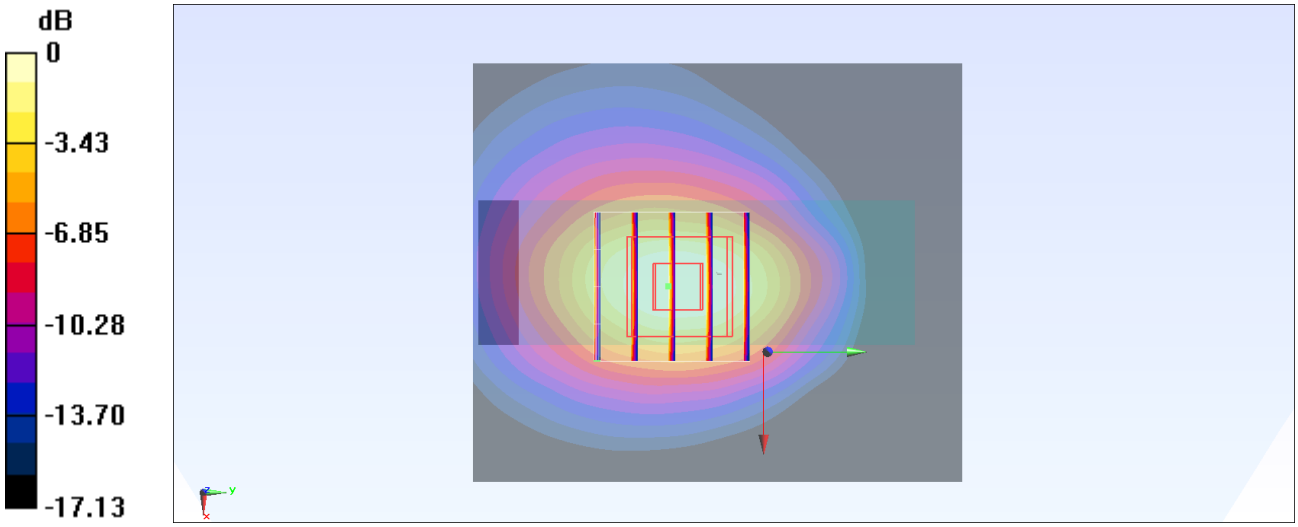

0 dB = 1.54 W/kg = 1.88 dBW/kg

#11_WCDMA V_RMC 12.2Kbps_Front_10mm_Ch4182

Communication System: WCDMA; Frequency: 836.4 MHz;Duty Cycle: 1:1
Medium: HSL_850_210826 Medium parameters used : f = 836.4 MHz; σ = 0.908 S/m; ε_r = 42.515; ρ = 1000 kg/m^3
Ambient Temperature：23.3 ℃; Liquid Temperature：22.3 ℃

DASY5 Configuration:
- Probe: EX3DV4 - SN7590; ConvF(10.73, 10.73, 10.73) @ 836.4 MHz; Calibrated: 2021/3/25
- Sensor-Surface: 1.4mm (Mechanical Surface Detection)
- Electronics: DAE4 Sn1424; Calibrated: 2021/1/19
- Phantom: SAM-Middle; Type: SAM; Serial: TP-1503
- Measurement SW: DASY52, Version 52.10 (4);SEMCAD X Version 14.6.14 (7483)

Area Scan (71x131x1): Interpolated grid: dx=1.500 mm, dy=1.500 mm
Maximum value of SAR (interpolated) = 0.683 W/kg

Zoom Scan (5x5x7)/Cube 0: Measurement grid: dx=8mm, dy=8mm, dz=5mm
Reference Value = 24.68 V/m; Power Drift = -0.09 dB
Peak SAR (extrapolated) = 0.799 W/kg
SAR(1 g) = 0.465 W/kg; SAR(10 g) = 0.277 W/kg
Maximum value of SAR (measured) = 0.668 W/kg

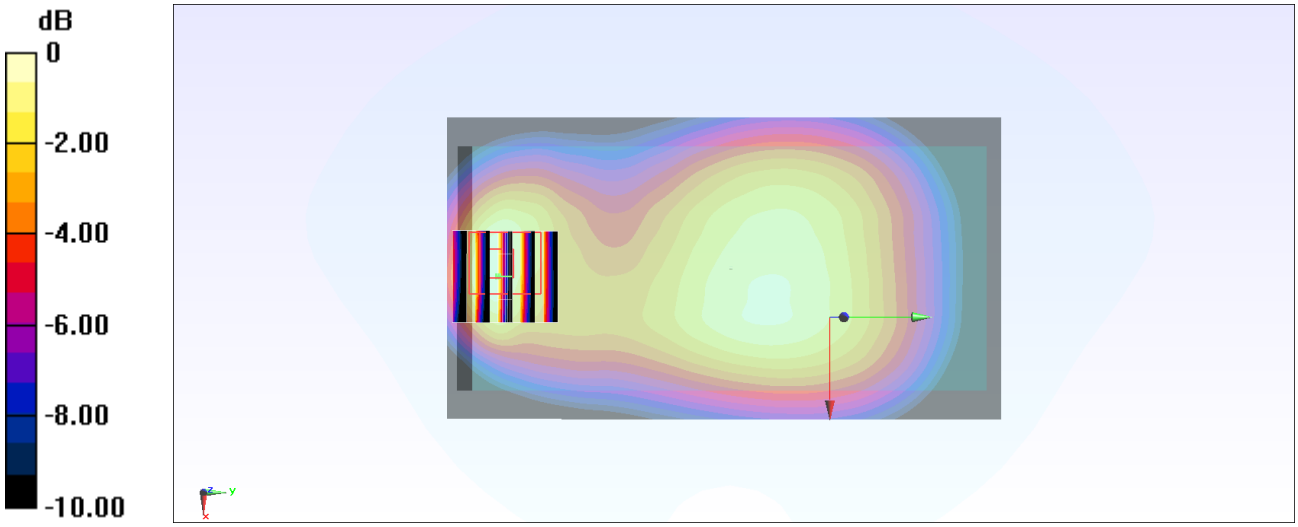

0 dB = 0.668 W/kg = -1.75 dBW/kg

#12_LTE Band 2_20M_QPSK_1_49_Bottom Side_10mm_Ch18700

Communication System: LTE ; Frequency: 1860 MHz;Duty Cycle: 1:1
Medium: HSL_1900_210910 Medium parameters used: f = 1860 MHz; σ = 1.417 S/m; ε_r = 39.579; ρ = 1000 kg/m^3
Ambient Temperature：23.4 ℃; Liquid Temperature：22.4 ℃

DASY5 Configuration:
- Probe: EX3DV4 - SN7590; ConvF(8.65, 8.65, 8.65) @ 1860 MHz; Calibrated: 2021/3/25
- Sensor-Surface: 1.4mm (Mechanical Surface Detection)
- Electronics: DAE4 Sn1424; Calibrated: 2021/1/19
- Phantom: SAM-Middle; Type: SAM; Serial: TP-1503
- Measurement SW: DASY52, Version 52.10 (4);SEMCAD X Version 14.6.14 (7483)

Area Scan (61x71x1): Interpolated grid: dx=1.500 mm, dy=1.500 mm
Maximum value of SAR (interpolated) = 1.17 W/kg

Zoom Scan (5x5x7)/Cube 0: Measurement grid: dx=8mm, dy=8mm, dz=5mm
Reference Value = 18.99 V/m; Power Drift = 0.17 dB
Peak SAR (extrapolated) = 1.31 W/kg
SAR(1 g) = 0.746 W/kg; SAR(10 g) = 0.400 W/kg
Maximum value of SAR (measured) = 1.11 W/kg

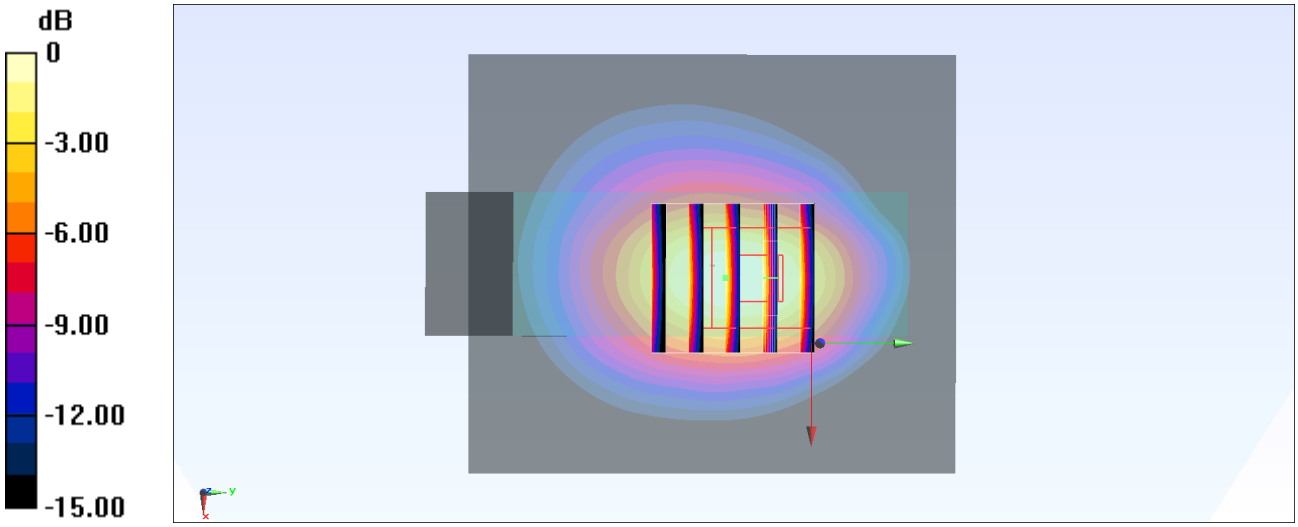

0 dB = 1.17 W/kg = 0.68 dBW/kg

#13_LTE Band 4_20M_QPSK_100_0_Bottom Side_10mm_Ch20175

Communication System: LTE; Frequency: 1732.5 MHz;Duty Cycle: 1:1
Medium: HSL_1750_210825 Medium parameters used: f = 1733 MHz; σ = 1.362 S/m; ε_r = 41.836; ρ = 1000 kg/m^3
Ambient Temperature：23.6 ℃; Liquid Temperature：22.6 ℃

DASY5 Configuration:
- Probe: EX3DV4 - SN7590; ConvF(8.84, 8.84, 8.84) @ 1732.5 MHz; Calibrated: 2021/3/25
- Sensor-Surface: 1.4mm (Mechanical Surface Detection)
- Electronics: DAE4 Sn1424; Calibrated: 2021/1/19
- Phantom: SAM-Middle; Type: SAM; Serial: TP-1503
- Measurement SW: DASY52, Version 52.10 (4);SEMCAD X Version 14.6.14 (7483)

Area Scan (61x71x1): Interpolated grid: dx=1.500 mm, dy=1.500 mm
Maximum value of SAR (interpolated) = 1.55 W/kg

Zoom Scan (5x5x7)/Cube 0: Measurement grid: dx=8mm, dy=8mm, dz=5mm
Reference Value = 21.34 V/m; Power Drift = 0.14 dB
Peak SAR (extrapolated) = 1.83 W/kg
SAR(1 g) = 1.05 W/kg; SAR(10 g) = 0.573 W/kg
Maximum value of SAR (measured) = 1.53 W/kg

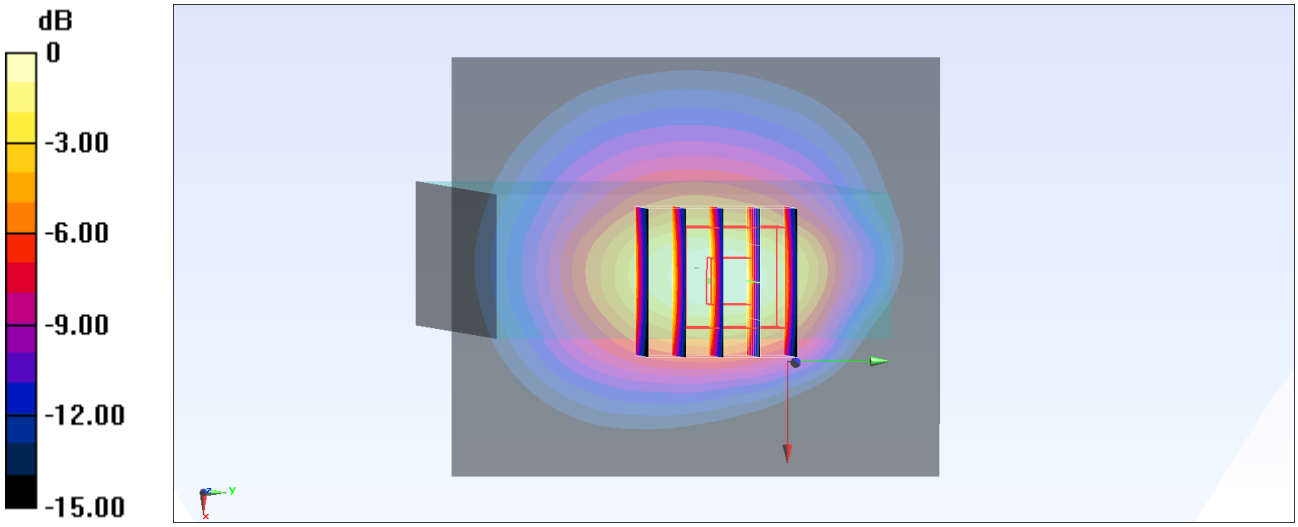

0 dB = 1.55 W/kg = 1.90 dBW/kg

#14_LTE Band 5_10M_QPSK_25_0_Front_10mm_Ch20525

Communication System: LTE; Frequency: 836.5 MHz;Duty Cycle: 1:1
Medium: HSL_850_210826 Medium parameters used : f = 836.5 MHz; σ = 0.909 S/m; ε_r = 42.513; ρ = 1000 kg/m^3
Ambient Temperature：23.3 ℃; Liquid Temperature：22.3 ℃

DASY5 Configuration:
- Probe: EX3DV4 - SN7590; ConvF(10.73, 10.73, 10.73) @ 836.5 MHz; Calibrated: 2021/3/25
- Sensor-Surface: 1.4mm (Mechanical Surface Detection)
- Electronics: DAE4 Sn1424; Calibrated: 2021/1/19
- Phantom: SAM-Middle; Type: SAM; Serial: TP-1503
- Measurement SW: DASY52, Version 52.10 (4);SEMCAD X Version 14.6.14 (7483)

Area Scan (71x141x1): Interpolated grid: dx=1.500 mm, dy=1.500 mm
Maximum value of SAR (interpolated) = 0.464 W/kg

Zoom Scan (5x5x7)/Cube 0: Measurement grid: dx=8mm, dy=8mm, dz=5mm
Reference Value = 20.85 V/m; Power Drift = 0.03 dB
Peak SAR (extrapolated) = 0.549 W/kg
SAR(1 g) = 0.320 W/kg; SAR(10 g) = 0.191 W/kg
Maximum value of SAR (measured) = 0.452 W/kg

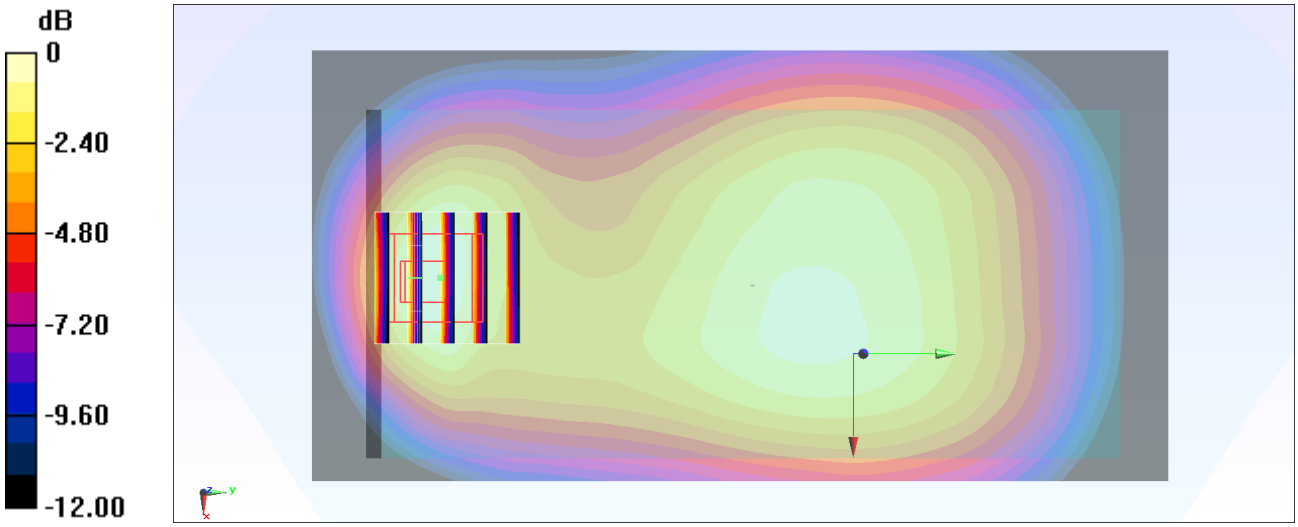

0 dB = 0.464 W/kg = -3.33 dBW/kg

#15_LTE Band 41_20M_QPSK_1_49_Bottom Side_10mm_Ch40340

Communication System: LTE; Frequency: 2565 MHz;Duty Cycle: 1:1.59
Medium: HSL_2600_210825 Medium parameters used : f = 2565 MHz; σ = 1.9 S/m; ε_r = 39.218; ρ = 1000 kg/m^3
Ambient Temperature：23.6 ℃; Liquid Temperature：22.6 ℃

DASY5 Configuration:
- Probe: EX3DV4 - SN7590; ConvF(7.69, 7.69, 7.69) @ 2565 MHz; Calibrated: 2021/3/25
- Sensor-Surface: 1.4mm (Mechanical Surface Detection)
- Electronics: DAE4 Sn1424; Calibrated: 2021/1/19
- Phantom: SAM-Middle; Type: SAM; Serial: TP-1503
- Measurement SW: DASY52, Version 52.10 (4);SEMCAD X Version 14.6.14 (7483)

Area Scan (71x91x1): Interpolated grid: dx=1.200 mm, dy=1.200 mm
Maximum value of SAR (interpolated) = 1.79 W/kg

Zoom Scan (7x7x7)/Cube 0: Measurement grid: dx=5mm, dy=5mm, dz=5mm
Reference Value = 22.63 V/m; Power Drift = 0.08 dB
Peak SAR (extrapolated) = 1.98 W/kg
SAR(1 g) = 1.06 W/kg; SAR(10 g) = 0.514 W/kg
Maximum value of SAR (measured) = 1.60 W/kg

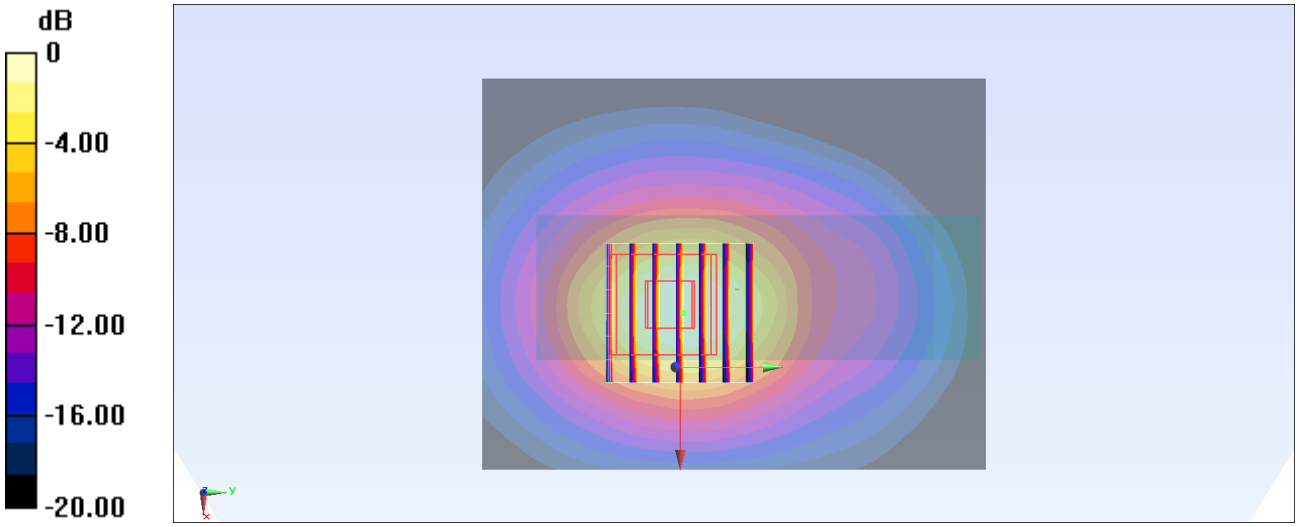

0 dB = 1.60 W/kg = 2.04 dBW/kg

#16_WLAN2.4GHz_802.11b 1Mbps_Right Side_10mm_Ch6

Communication System: 802.11b; Frequency: 2437 MHz;Duty Cycle: 1:1
Medium: HSL_2450_210827 Medium parameters used : f = 2437 MHz; σ = 1.75 S/m; ε_r = 38.564; ρ = 1000 kg/m^3
Ambient Temperature：23.9 ℃; Liquid Temperature：22.9 ℃

DASY5 Configuration:
- Probe: EX3DV4 - SN7590; ConvF(7.94, 7.94, 7.94) @ 2437 MHz; Calibrated: 2021/3/25
- Sensor-Surface: 1.4mm (Mechanical Surface Detection)
- Electronics: DAE4 Sn1424; Calibrated: 2021/1/19
- Phantom: SAM-Middle; Type: SAM; Serial: TP-1503
- Measurement SW: DASY52, Version 52.10 (4);SEMCAD X Version 14.6.14 (7483)

Area Scan (71x111x1): Interpolated grid: dx=1.200 mm, dy=1.200 mm
Maximum value of SAR (interpolated) = 0.106 W/kg

Zoom Scan (7x7x7)/Cube 0: Measurement grid: dx=5mm, dy=5mm, dz=5mm
Reference Value = 6.843 V/m; Power Drift = -0.10 dB
Peak SAR (extrapolated) = 0.131 W/kg
SAR(1 g) = 0.067 W/kg; SAR(10 g) = 0.033 W/kg
Maximum value of SAR (measured) = 0.107 W/kg

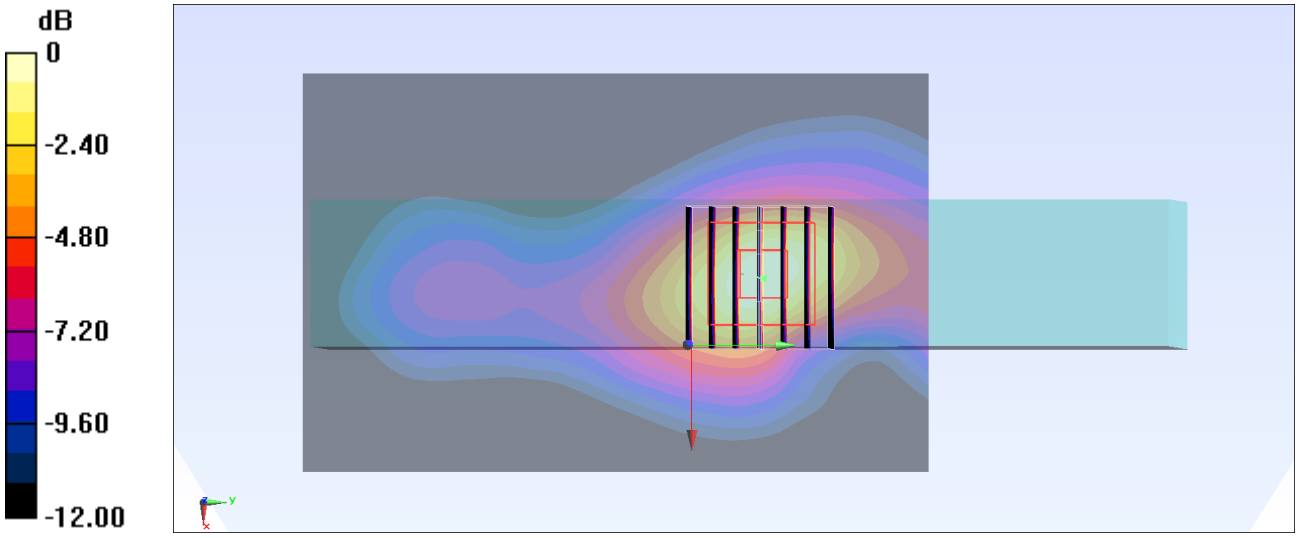

0 dB = 0.106 W/kg = -9.75 dBW/kg

#17_Bluetooth_1Mbps_Right Side_10mm_Ch39

Communication System: Bluetooth ; Frequency: 2441 MHz;Duty Cycle: 1:1.282
Medium: HSL_2450_210827 Medium parameters used : f = 2441 MHz; σ = 1.752 S/m; ε_r = 38.555; ρ = 1000 kg/m^3
Ambient Temperature：23.9 ℃; Liquid Temperature：22.9 ℃

DASY5 Configuration:
- Probe: EX3DV4 - SN7590; ConvF(7.94, 7.94, 7.94) @ 2441 MHz; Calibrated: 2021/3/25
- Sensor-Surface: 1.4mm (Mechanical Surface Detection)
- Electronics: DAE4 Sn1424; Calibrated: 2021/1/19
- Phantom: SAM-Middle; Type: SAM; Serial: TP-1503
- Measurement SW: DASY52, Version 52.10 (4);SEMCAD X Version 14.6.14 (7483)

Area Scan (71x131x1): Interpolated grid: dx=1.200 mm, dy=1.200 mm
Maximum value of SAR (interpolated) = 0.0320 W/kg

Zoom Scan (7x7x7)/Cube 0: Measurement grid: dx=5mm, dy=5mm, dz=5mm
Reference Value = 3.685 V/m; Power Drift = -0.11 dB
Peak SAR (extrapolated) = 0.0430 W/kg
SAR(1 g) = 0.020 W/kg; SAR(10 g) = 0.010 W/kg
Maximum value of SAR (measured) = 0.0330 W/kg

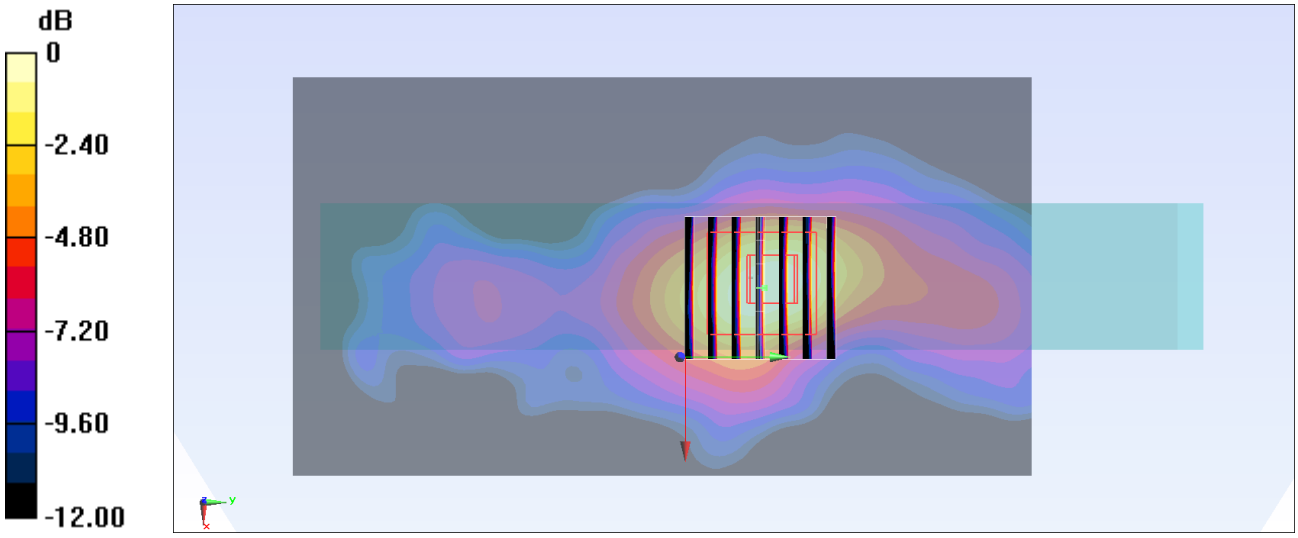

0 dB = 0.0320 W/kg = -14.95 dBW/kg

#18_WCDMA II_RMC 12.2Kbps_Front_10mm_Ch9262

Communication System: WCDMA; Frequency: 1852.4 MHz;Duty Cycle: 1:1
Medium: HSL_1900_210910 Medium parameters used : f = 1852.4 MHz; σ = 1.411 S/m; ε_r = 39.579; ρ = 1000 kg/m^3
Ambient Temperature：23.4 ℃; Liquid Temperature：22.4 ℃

DASY5 Configuration:
- Probe: EX3DV4 - SN7590; ConvF(8.65, 8.65, 8.65) @ 1852.4 MHz; Calibrated: 2021/3/25
- Sensor-Surface: 1.4mm (Mechanical Surface Detection)
- Electronics: DAE4 Sn1424; Calibrated: 2021/1/19
- Phantom: SAM-Middle; Type: SAM; Serial: TP-1503
- Measurement SW: DASY52, Version 52.10 (4);SEMCAD X Version 14.6.14 (7483)

Area Scan (71x81x1): Interpolated grid: dx=1.500 mm, dy=1.500 mm
Maximum value of SAR (interpolated) = 0.995 W/kg

Zoom Scan (5x5x7)/Cube 0: Measurement grid: dx=8mm, dy=8mm, dz=5mm
Reference Value = 17.68 V/m; Power Drift = 0.05 dB
Peak SAR (extrapolated) = 1.07 W/kg
SAR(1 g) = 0.642 W/kg; SAR(10 g) = 0.356 W/kg
Maximum value of SAR (measured) = 0.926 W/kg

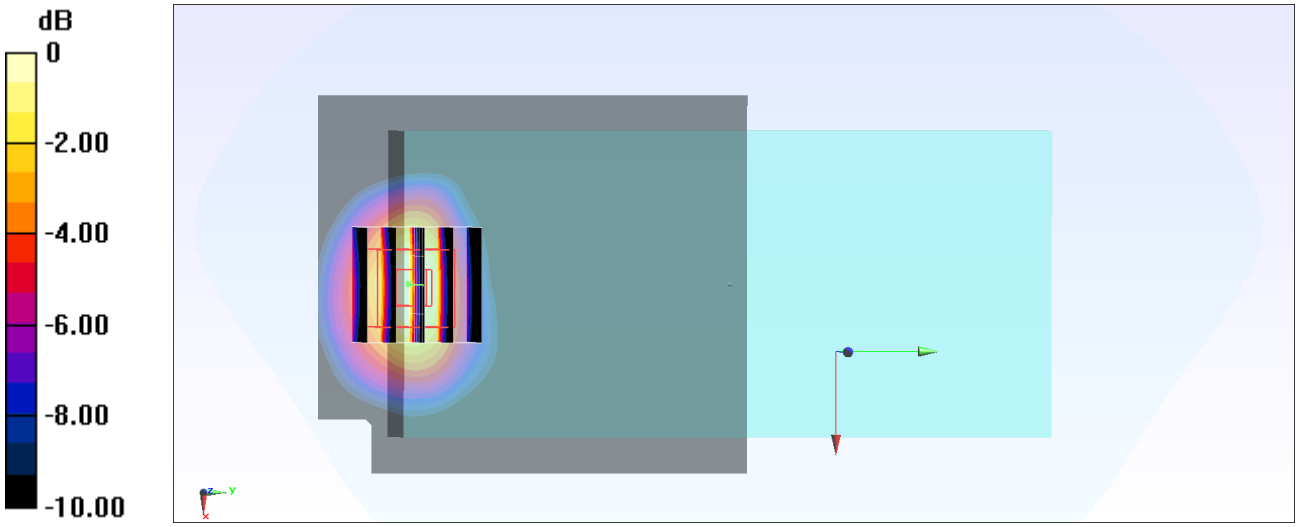

0 dB = 0.926 W/kg = -0.33 dBW/kg

#19_WCDMA V_RMC 12.2Kbps_Front_10mm_Ch4182

Communication System: WCDMA; Frequency: 836.4 MHz;Duty Cycle: 1:1
Medium: HSL_850_210826 Medium parameters used : f = 836.4 MHz; σ = 0.908 S/m; ε_r = 42.515; ρ = 1000 kg/m^3
Ambient Temperature：23.3 ℃; Liquid Temperature：22.3 ℃

DASY5 Configuration:
- Probe: EX3DV4 - SN7590; ConvF(10.73, 10.73, 10.73) @ 836.4 MHz; Calibrated: 2021/3/25
- Sensor-Surface: 1.4mm (Mechanical Surface Detection)
- Electronics: DAE4 Sn1424; Calibrated: 2021/1/19
- Phantom: SAM-Middle; Type: SAM; Serial: TP-1503
- Measurement SW: DASY52, Version 52.10 (4);SEMCAD X Version 14.6.14 (7483)

Area Scan (71x131x1): Interpolated grid: dx=1.500 mm, dy=1.500 mm
Maximum value of SAR (interpolated) = 0.683 W/kg

Zoom Scan (5x5x7)/Cube 0: Measurement grid: dx=8mm, dy=8mm, dz=5mm
Reference Value = 24.68 V/m; Power Drift = -0.09 dB
Peak SAR (extrapolated) = 0.799 W/kg
SAR(1 g) = 0.465 W/kg; SAR(10 g) = 0.277 W/kg
Maximum value of SAR (measured) = 0.668 W/kg

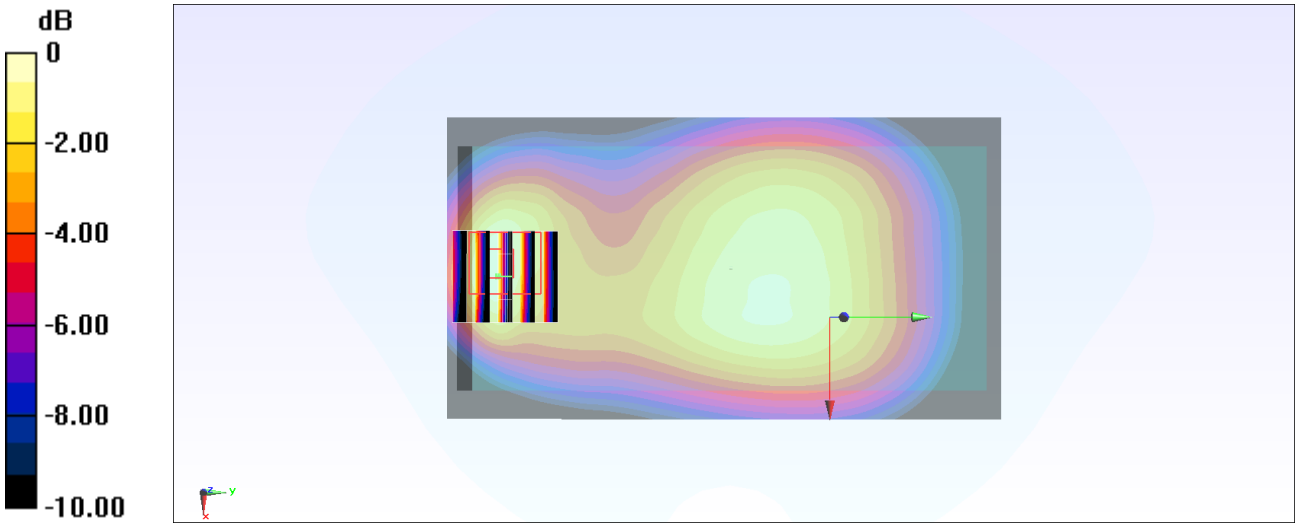

0 dB = 0.668 W/kg = -1.75 dBW/kg

#20_LTE Band 2_20M_QPSK_1_49_Front_10mm_Ch18700

Communication System: LTE; Frequency: 1860 MHz;Duty Cycle: 1:1
Medium: HSL_1900_210910 Medium parameters used: f = 1860 MHz; σ = 1.417 S/m; ε_r = 39.579; ρ = 1000 kg/m^3
Ambient Temperature：23.4 ℃; Liquid Temperature：22.4 ℃

DASY5 Configuration:
- Probe: EX3DV4 - SN7590; ConvF(8.65, 8.65, 8.65) @ 1860 MHz; Calibrated: 2021/3/25
- Sensor-Surface: 1.4mm (Mechanical Surface Detection)
- Electronics: DAE4 Sn1424; Calibrated: 2021/1/19
- Phantom: SAM-Middle; Type: SAM; Serial: TP-1503
- Measurement SW: DASY52, Version 52.10 (4);SEMCAD X Version 14.6.14 (7483)

Area Scan (71x81x1): Interpolated grid: dx=1.500 mm, dy=1.500 mm
Maximum value of SAR (interpolated) = 0.665 W/kg

Zoom Scan (5x5x7)/Cube 0: Measurement grid: dx=8mm, dy=8mm, dz=5mm
Reference Value = 13.41 V/m; Power Drift = 0.18 dB
Peak SAR (extrapolated) = 0.859 W/kg
SAR(1 g) = 0.509 W/kg; SAR(10 g) = 0.280 W/kg
Maximum value of SAR (measured) = 0.705 W/kg

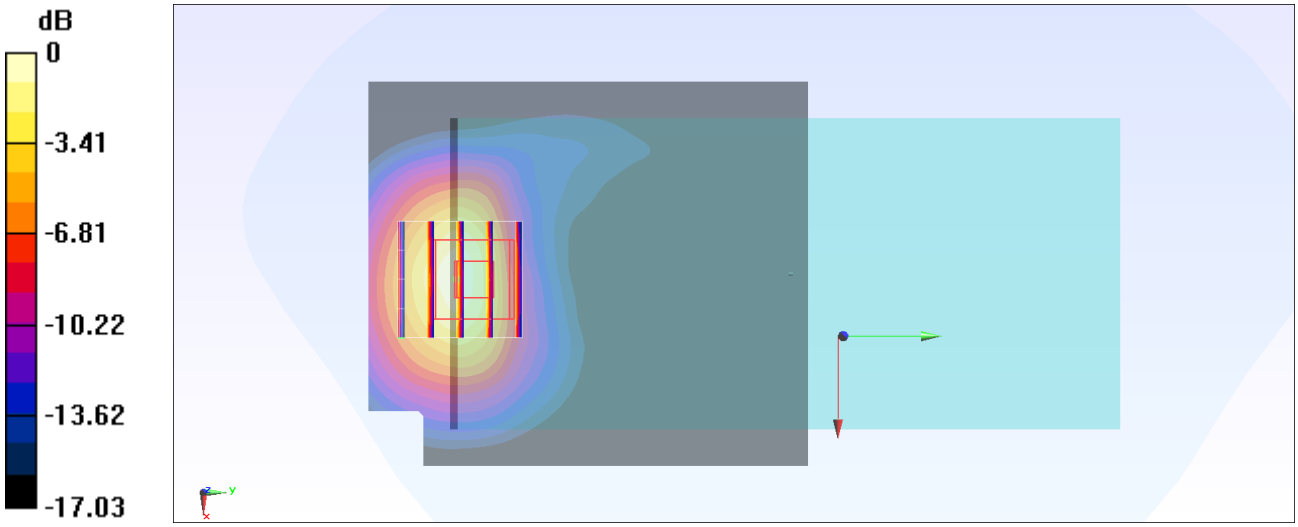

0 dB = 0.705 W/kg = -1.52 dBW/kg

#21_LTE Band 4_20M_QPSK_1_49_Front_10mm_Ch20175

Communication System: LTE; Frequency: 1732.5 MHz;Duty Cycle: 1:1
Medium: HSL_1750_210825 Medium parameters used: f = 1733 MHz; σ = 1.362 S/m; ε_r = 41.836; ρ = 1000 kg/m^3
Ambient Temperature：23.6 ℃; Liquid Temperature：22.6 ℃

DASY5 Configuration:
- Probe: EX3DV4 - SN7590; ConvF(8.84, 8.84, 8.84) @ 1732.5 MHz; Calibrated: 2021/3/25
- Sensor-Surface: 1.4mm (Mechanical Surface Detection)
- Electronics: DAE4 Sn1424; Calibrated: 2021/1/19
- Phantom: SAM-Middle; Type: SAM; Serial: TP-1503
- Measurement SW: DASY52, Version 52.10 (4);SEMCAD X Version 14.6.14 (7483)

Area Scan (71x81x1): Interpolated grid: dx=1.500 mm, dy=1.500 mm
Maximum value of SAR (interpolated) = 1.03 W/kg

Zoom Scan (5x5x7)/Cube 0: Measurement grid: dx=8mm, dy=8mm, dz=5mm
Reference Value = 17.53 V/m; Power Drift = -0.14 dB
Peak SAR (extrapolated) = 1.07 W/kg
SAR(1 g) = 0.646 W/kg; SAR(10 g) = 0.373 W/kg
Maximum value of SAR (measured) = 0.920 W/kg

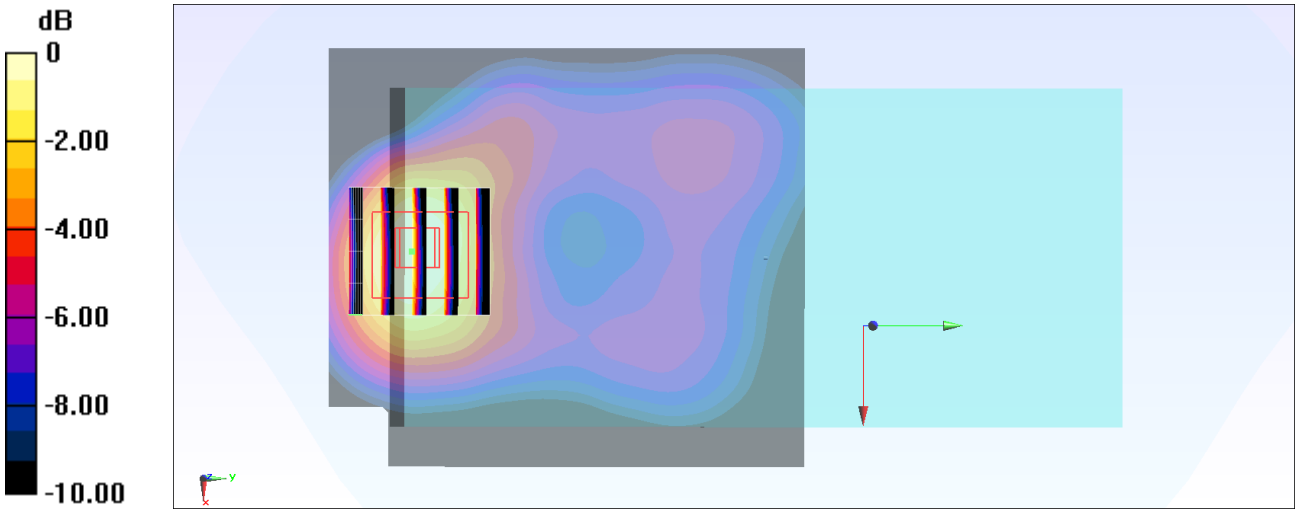

0 dB = 0.920 W/kg = -0.36 dBW/kg

#22_LTE Band 5_10M_QPSK_25_0_Front_10mm_Ch20525

Communication System: LTE; Frequency: 836.5 MHz;Duty Cycle: 1:1
Medium: HSL_850_210826 Medium parameters used : f = 836.5 MHz; σ = 0.909 S/m; ε_r = 42.513; ρ = 1000 kg/m^3
Ambient Temperature：23.3 ℃; Liquid Temperature：22.3 ℃

DASY5 Configuration:
- Probe: EX3DV4 - SN7590; ConvF(10.73, 10.73, 10.73) @ 836.5 MHz; Calibrated: 2021/3/25
- Sensor-Surface: 1.4mm (Mechanical Surface Detection)
- Electronics: DAE4 Sn1424; Calibrated: 2021/1/19
- Phantom: SAM-Middle; Type: SAM; Serial: TP-1503
- Measurement SW: DASY52, Version 52.10 (4);SEMCAD X Version 14.6.14 (7483)

Area Scan (71x141x1): Interpolated grid: dx=1.500 mm, dy=1.500 mm
Maximum value of SAR (interpolated) = 0.464 W/kg

Zoom Scan (5x5x7)/Cube 0: Measurement grid: dx=8mm, dy=8mm, dz=5mm
Reference Value = 20.85 V/m; Power Drift = 0.03 dB
Peak SAR (extrapolated) = 0.549 W/kg
SAR(1 g) = 0.320 W/kg; SAR(10 g) = 0.191 W/kg
Maximum value of SAR (measured) = 0.452 W/kg

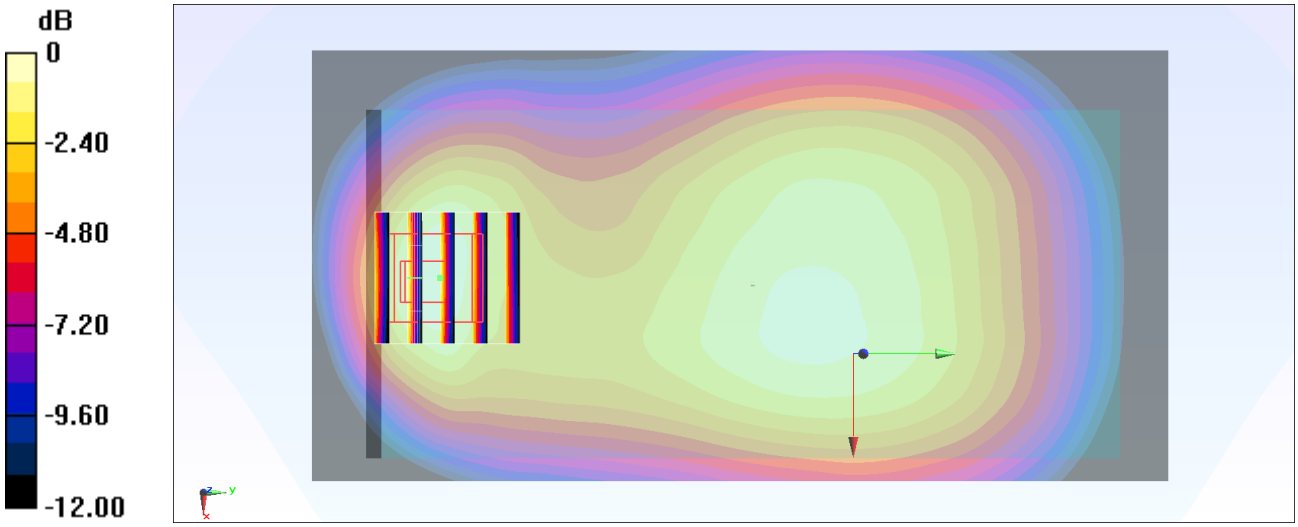

0 dB = 0.464 W/kg = -3.33 dBW/kg

#23_LTE Band 41_20M_QPSK_1_49_Front_10mm_Ch40340

Communication System: LTE; Frequency: 2565 MHz;Duty Cycle: 1:1.59
Medium: HSL_2600_210825 Medium parameters used : f = 2565 MHz; σ = 1.9 S/m; ε_r = 39.218; ρ = 1000 kg/m^3
Ambient Temperature：23.6 ℃; Liquid Temperature：22.6 ℃

DASY5 Configuration:
- Probe: EX3DV4 - SN7590; ConvF(7.69, 7.69, 7.69) @ 2565 MHz; Calibrated: 2021/3/25
- Sensor-Surface: 1.4mm (Mechanical Surface Detection)
- Electronics: DAE4 Sn1424; Calibrated: 2021/1/19
- Phantom: SAM-Middle; Type: SAM; Serial: TP-1503
- Measurement SW: DASY52, Version 52.10 (4);SEMCAD X Version 14.6.14 (7483)

Area Scan (91x101x1): Interpolated grid: dx=1.200 mm, dy=1.200 mm
Maximum value of SAR (interpolated) = 1.15 W/kg

Zoom Scan (7x7x7)/Cube 0: Measurement grid: dx=5mm, dy=5mm, dz=5mm
Reference Value = 20.06 V/m; Power Drift = 0.08 dB
Peak SAR (extrapolated) = 1.30 W/kg
SAR(1 g) = 0.680 W/kg; SAR(10 g) = 0.325 W/kg
Maximum value of SAR (measured) = 1.06 W/kg

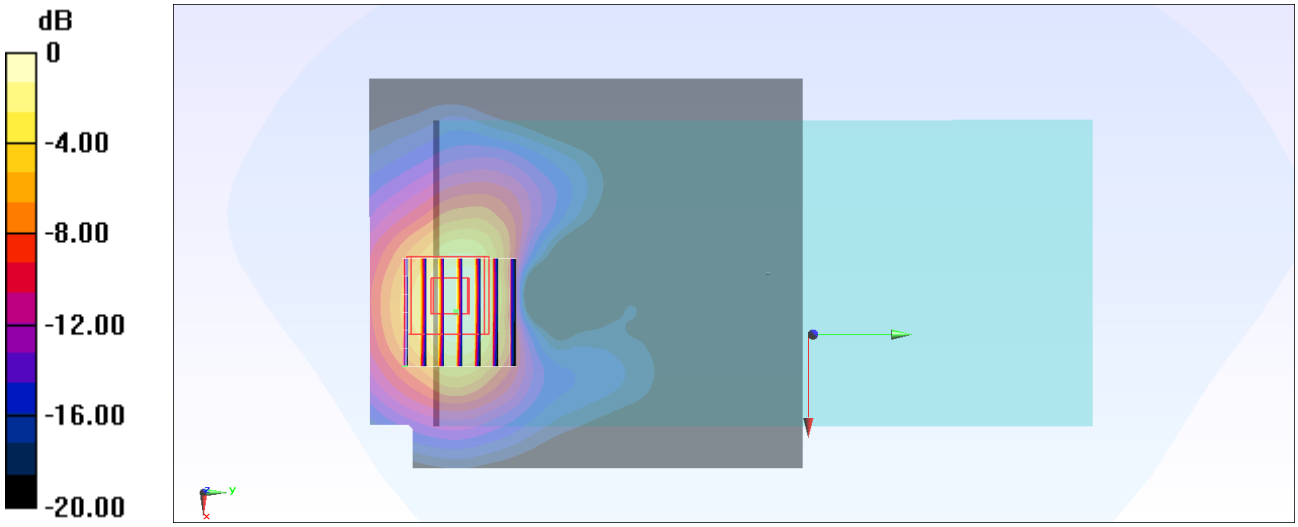

0 dB = 1.06 W/kg = 0.25 dBW/kg

#24_WLAN2.4GHz_802.11b 1Mbps_Front_10mm_Ch6

Communication System: 802.11b; Frequency: 2437 MHz;Duty Cycle: 1:1
Medium: HSL_2450_210827 Medium parameters used : f = 2437 MHz; σ = 1.75 S/m; ε_r = 38.564; ρ = 1000 kg/m^3
Ambient Temperature：23.9 ℃; Liquid Temperature：22.9 ℃

DASY5 Configuration:
- Probe: EX3DV4 - SN7590; ConvF(7.94, 7.94, 7.94) @ 2437 MHz; Calibrated: 2021/3/25
- Sensor-Surface: 1.4mm (Mechanical Surface Detection)
- Electronics: DAE4 Sn1424; Calibrated: 2021/1/19
- Phantom: SAM-Middle; Type: SAM; Serial: TP-1503
- Measurement SW: DASY52, Version 52.10 (4);SEMCAD X Version 14.6.14 (7483)

Area Scan (91x111x1): Interpolated grid: dx=1.200 mm, dy=1.200 mm
Maximum value of SAR (interpolated) = 0.0458 W/kg

Zoom Scan (7x7x7)/Cube 0: Measurement grid: dx=5mm, dy=5mm, dz=5mm
Reference Value = 4.150 V/m; Power Drift = 0.04 dB
Peak SAR (extrapolated) = 0.0540 W/kg
SAR(1 g) = 0.028 W/kg; SAR(10 g) = 0.015 W/kg
Maximum value of SAR (measured) = 0.0444 W/kg

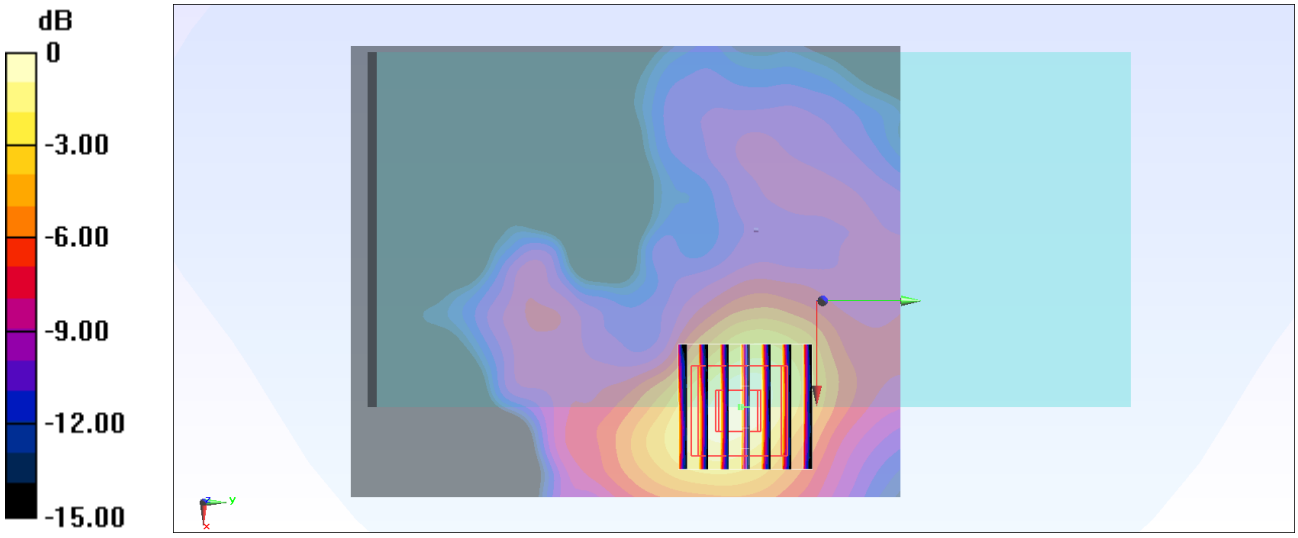

0 dB = 0.0458 W/kg = -13.39 dBW/kg

#25_WLAN5GHz_802.11n-HT40 MCS0_Front_10mm_Ch62

Communication System: 802.11n ; Frequency: 5310 MHz;Duty Cycle: 1:1.053
Medium: HSL_5G_210828 Medium parameters used: f = 5310 MHz; σ = 4.888 S/m; ε_r = 37.177; ρ = 1000 kg/m^3
Ambient Temperature：23.9 ℃; Liquid Temperature：22.9 ℃

DASY5 Configuration:
- Probe: EX3DV4 - SN7590; ConvF(5.54, 5.54, 5.54) @ 5310 MHz; Calibrated: 2021/3/25
- Sensor-Surface: 1.4mm (Mechanical Surface Detection)
- Electronics: DAE4 Sn1424; Calibrated: 2021/1/19
- Phantom: SAM_Left; Type: SAM; Serial: TP:1479
- Measurement SW: DASY52, Version 52.10 (4);SEMCAD X Version 14.6.14 (7483)

Area Scan (121x161x1): Interpolated grid: dx=1.000 mm, dy=1.000 mm
Maximum value of SAR (interpolated) = 0.199 W/kg

Zoom Scan (8x8x7)/Cube 0: Measurement grid: dx=4mm, dy=4mm, dz=1.4mm
Reference Value = 4.639 V/m; Power Drift = -0.12 dB
Peak SAR (extrapolated) = 0.332 W/kg
SAR(1 g) = 0.087 W/kg; SAR(10 g) = 0.031 W/kg
Maximum value of SAR (measured) = 0.194 W/kg

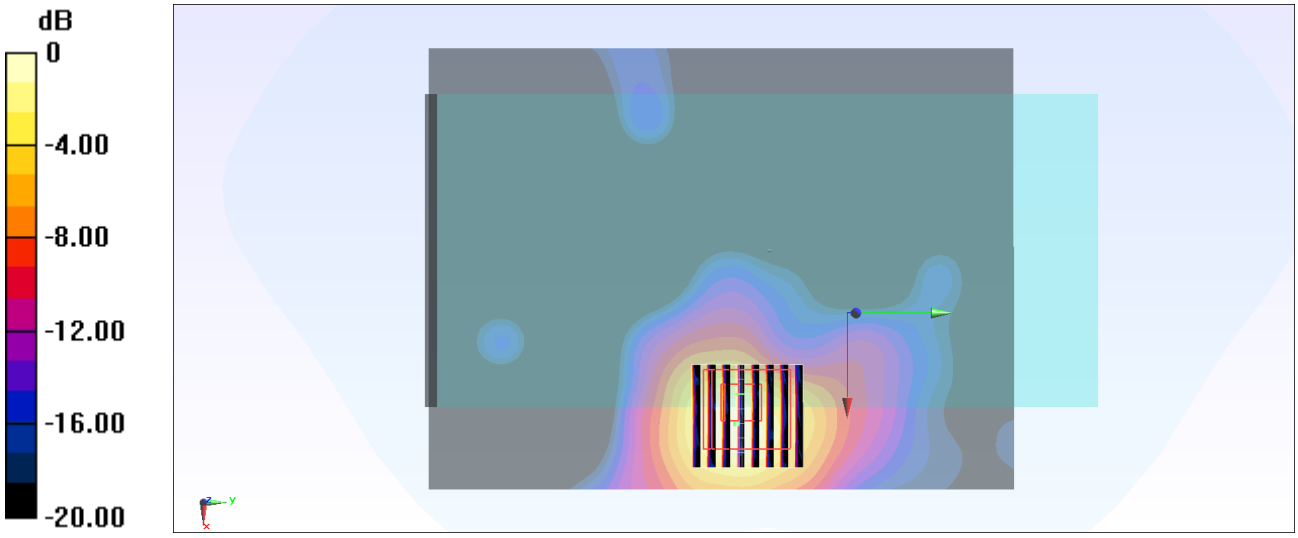

0 dB = 0.199 W/kg = -7.01 dBW/kg

#26_Bluetooth_1Mbps_Front_10mm_Ch39

Communication System: Bluetooth ; Frequency: 2441 MHz;Duty Cycle: 1:1.282
Medium: HSL_2450_210827 Medium parameters used : f = 2441 MHz; σ = 1.752 S/m; ε_r = 38.555; ρ = 1000 kg/m^3
Ambient Temperature：23.9 ℃; Liquid Temperature：22.9 ℃

DASY5 Configuration:
- Probe: EX3DV4 - SN7590; ConvF(7.94, 7.94, 7.94) @ 2441 MHz; Calibrated: 2021/3/25
- Sensor-Surface: 1.4mm (Mechanical Surface Detection)
- Electronics: DAE4 Sn1424; Calibrated: 2021/1/19
- Phantom: SAM-Middle; Type: SAM; Serial: TP-1503
- Measurement SW: DASY52, Version 52.10 (4);SEMCAD X Version 14.6.14 (7483)

Area Scan (91x131x1): Interpolated grid: dx=1.200 mm, dy=1.200 mm
Maximum value of SAR (interpolated) = 0.0142 W/kg

Zoom Scan (7x7x7)/Cube 0: Measurement grid: dx=5mm, dy=5mm, dz=5mm
Reference Value = 2.068 V/m; Power Drift = -0.11 dB
Peak SAR (extrapolated) = 0.0170 W/kg
SAR(1 g) = 0.00912 W/kg; SAR(10 g) = 0.00468 W/kg
Maximum value of SAR (measured) = 0.0140 W/kg

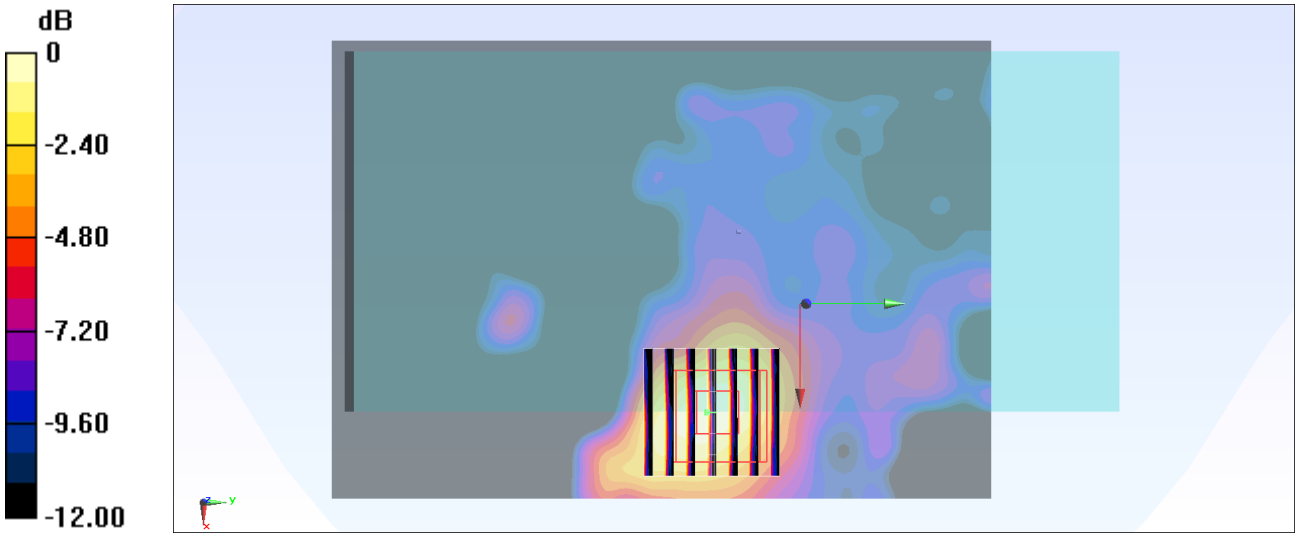

0 dB = 0.0142 W/kg = -18.48 dBW/kg

#27_WLAN5GHz_802.11n-HT40 MCS0_Right Side_0mm_Ch62

Communication System: 802.11n ; Frequency: 5310 MHz;Duty Cycle: 1:1.053
Medium: HSL_5G_210828 Medium parameters used: f = 5310 MHz; σ = 4.888 S/m; ε_r = 37.177; ρ = 1000 kg/m^3
Ambient Temperature：23.9 ℃; Liquid Temperature：22.9 ℃

DASY5 Configuration:
- Probe: EX3DV4 - SN7590; ConvF(5.54, 5.54, 5.54) @ 5310 MHz; Calibrated: 2021/3/25
- Sensor-Surface: 1.4mm (Mechanical Surface Detection)
- Electronics: DAE4 Sn1424; Calibrated: 2021/1/19
- Phantom: SAM_Left; Type: SAM; Serial: TP:1479
- Measurement SW: DASY52, Version 52.10 (4);SEMCAD X Version 14.6.14 (7483)

Area Scan (101x201x1): Interpolated grid: dx=1.000 mm, dy=1.000 mm
Maximum value of SAR (interpolated) = 1.11 W/kg

Zoom Scan (9x9x7)/Cube 0: Measurement grid: dx=4mm, dy=4mm, dz=1.4mm
Reference Value = 8.131 V/m; Power Drift = -0.15 dB
Peak SAR (extrapolated) = 9.11 W/kg
SAR(1 g) = 1.82 W/kg; SAR(10 g) = 0.398 W/kg
Maximum value of SAR (measured) = 5.14 W/kg

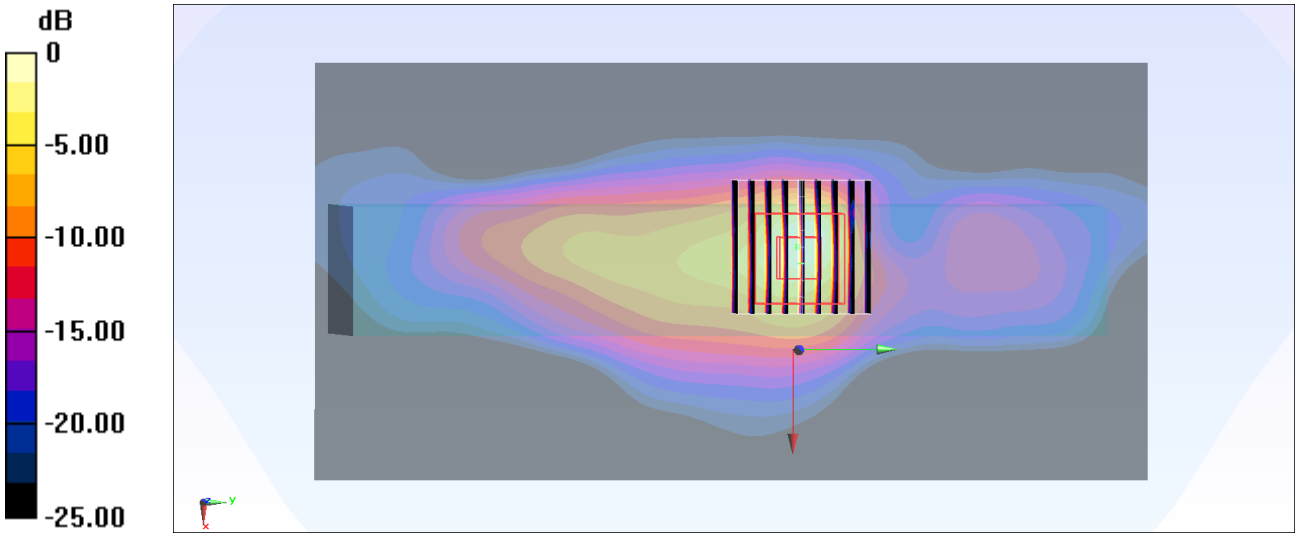

0 dB = 1.11 W/kg = 0.45 dBW/kg