KEYENCE

96M17044

RFID Unit

DX-RH1/RH1GA
DX-RM1/RM1GA

Instruction Manual

Be sure to read this instruction manual carefully prior to operating this product. After reading, keep this manual in a safe place so that you can refer to it at any time.

Symbols

The following symbols alert you to important messages. Be sure to read these messages carefully.

DANGER	**Indicates a hazardous situation which, if not avoided, will result in death or serious injury.**
WARNING	**Indicates a hazardous situation which, if not avoided, could result in death or serious injury.**
CAUTION	**Indicates a hazardous situation which, if not avoided, could result in minor or moderate injury.**
NOTICE	**Indicates a situation which, if not avoided, could result in product damage as well as property damage.**
Important	**Indicates cautions and limitations that must be followed during operation.**
Point	**Indicates additional information on proper operation.**
Reference	Indicates tips for better understanding or useful information.

- Company names and product names described in this manual are registered trademarks or trademarks of each company.
- It is prohibited to use or copy all or any part of this manual without prior approval.
- The information contained in this manual is subject to change without notice.

Safety Precautions

General cautions

DANGER	• **Do not use this product for the purpose of protecting a human body or a part of a human body.** • **This product is not intended for use as an explosion-proof product. Do not use this product in a hazardous location and/or potentially explosive atmosphere.** • **Do not use this product in an application that may cause death, serious injury, or serious property damage due to a failure with this product occurring, such as nuclear power plants, on aircraft, trains, ships, or vehicles, used within medical equipment, playground equipment, roller coasters and other rides, etc.**
WARNING	• **If the product is used in a manner not specified by the manufacturer, the protection provided by the product may be impaired.**
CAUTION	• **Be sure to check that this product performs properly before starting the work or operation.** • **We recommend that you take substantial safety measures to avoid any damage in the event of a problem occurring.** • **Do not use this product in a manner not specified herein. Doing so may result in fire, electric shock, or malfunction.**
NOTICE	• **Do not modify this product or use it in any way other than described in the specifications. Otherwise, the functions and performance cannot be guaranteed.**

Handling of DX-RH1/RH1GA/RM1/RM1GA

NOTICE	• **Do not use this product with devices other than the DX Series. The DX-RH1/RH1GA/RM1/RM1GA or the other device may be damaged.**

Handling of rechargeable battery (DX-BC6)

WARNING	**Observe the following precautions during use. Failure to do so may result in heat generation, smoke generation, fire, explosion, battery leakage, gas leakage, etc. of the rechargeable battery pack.** • **Only use the specified battery.** • **Do not charge, use, or store the rechargeable battery at locations of high temperature above the specified range—such as near fire, in a heated car, and under the scorching sun—or at locations of low temperature below the specified range.** • **Do not put it into fire or subject to heat. If there is battery leakage or abnormal smell, immediately take it away from fire.** • **Do not drop the rechargeable battery or subject it to strong pressure (such as by crushing, bending, deforming, making holes in, cutting, or throwing it).**

Precautions on Regulations and Standards

Precautions on wireless LAN

WARNING	**Remove the rechargeable battery of the DX-RH1/RH1GA/RM1/RM1GA near locations where using wireless devices is banned at medical institutions or near electric devices for medical purposes. Carry and use the product away from an implanted cardiac pacemaker. For details, see the website of the Ministry of Internal Affairs and Communications of Japan.**

Important

- **Communication may be impossible at locations near metallic objects, locations surrounded with metallic walls, where there is a lot of metallic powder, and in similar usage environments. Be sure to check whether communication is possible prior to installation.**
- **If this product is used near devices with the same frequency band, radio wave interference may occur and the communication speed may become slow or communication may become impossible.**

[Japan]

- **The DX-RH1/RM1 has obtained construction design certification according to the Radio Act of Japan.**
- **Never disassemble or modify this device. Doing so is prohibited by the Radio Act.**
- **If other radio stations are subject to radio wave interference from this unit, immediately stop the electric wave generation, and then contact the below phone number in regard to taking necessary measures (e.g. setting a partition) to avoid interference.**
  KEYENCE Corporation, +81-6-6379-1151

[Japan]

Land mobile station application

Important

The DX-RH1 uses electric waves in the UHF band (920 MHz), which is categorized for land mobile stations having high output (antenna power of 1 W or less). Therefore, when using the DX-RH1, an application to use the device as a premises radio station or land mobile station must be made to the Ministry of Internal Affairs and Communications of Japan. For details, see the website of this ministry.
Failure to obtain written notification of radio station registration or to report the installation of such a station is a violation of the Radio Act.

UL Certificate

The DX-RH1GA/RM1GA complies with the following UL and CSA standards and has been certified by UL.

- UL File No. E167973
- Category AZOT/AZOT7
- Applicable standards UL 62368-1
  CAN/CSA-C22.2, No. 62368-1

Be sure to consider the following specifications when using this product as a UL certified product.
Use this product in combination with the DX-BC6 which has obtained UL certification.

CAUTION	**Replacing the battery with an incorrect type presents an explosion hazard. Dispose of used batteries according to the instruction manual.**

FCC Regulations

- This device complies with part 15 of the FCC Rules. Operation is subject to the following two conditions; (1) This device may not cause harmful interface, and (2) this device must accept any interference received, including interference that may cause undesired operation.
- Application regulation
  FCC Part 15 Subpart B Class A
  FCC Part 15 Subpart C
- The available scientific evidence does not show that any health problems are associated with using low power wireless devices. There is no proof, however, that these low power wireless devices are absolutely safe. Low power Wireless devices emit low levels of radio frequency energy (RF) in the microwave range while being used. Whereas high levels of RF can produce health effects (by heating tissue), exposure of low-level RF that does not produce heating effects causes no known adverse health effects. Many studies of low-level RF exposures have not found any biological effects. Some studies have suggested that some biological effects might occur, but such findings have not been confirmed by additional research. The DX-RH1GA/RM1GA only has been tested and found to comply with FCC radiation exposure limits set forth for controlled environments and meets the FCC radio frequency (RF) Exposure Guidelines.

CAUTION	**This equipment has been tested and found to comply with the limits for a Class A digital device, pursuant to part 15 of the FCC Rules. These limits are designed to provide reasonable protection against harmful interference when the equipment is operated in a commercial environment. This equipment generates, uses, and can radiate radio frequency energy and, if not installed and used in accordance with the instruction manual, may cause harmful interference to radio communications. Operation of this equipment in a residential area is likely to cause harmful interference in which case the user will be required to correct the interference at his/her own expense.** • **FCC CAUTION** **Changes or modifications not expressly approved by the party responsible for compliance could void the user's authority to operate the equipment.** • **This transmitter must not be co-located or operated in conjunction with any other antenna or transmitter.**

Instruction Manual

■ ISED Regulations

This device complies with the following regulations specified by the ISED.

- Applicable regulation
  CAN ICES-003 (A) / NMB-003 (A)
  RSS-247
  RSS102
- The available scientific evidence does not show that any health problems are associated with using low power wireless devices. There is no proof, however, that these low power wireless devices are absolutely safe. Low power Wireless devices emit low levels of radio frequency energy (RF) in the microwave range while being used. Whereas high levels of RF can produce health effects (by heating tissue), exposure of low-level RF that does not produce heating effects causes no known adverse health effects. Many studies of low-level RF exposures have not found any biological effects. Some studies have suggested that some biological effects might occur, but such findings have not been confirmed by additional research. The DX-RH1GA/RM1GA only has been tested and found to comply with IC radiation exposure limits set forth for an uncontrolled environment and meets RSS-102 of the IC radio frequency (RF) Exposure rules.
- Les connaissances scientifiques dont nous disposons n'ont mis en évidence aucun problème de santé associé à l'usage des appareils sans fil à faible puissance. Nous ne sommes cependant pas en mesure de prouver que ces appareils sans fil à faible puissance sont entièrement sans danger. Les appareils sans fil à faible puissance émettent une énergie radioélectrique (RF) très faible dans le spectre des micro-ondes lorsqu'ils sont utilisés. Alors qu'une dose élevée de RF peut avoir des effets sur la santé (en chauffant les tissus), l'exposition à de faibles RF qui ne produisent pas de chaleur n'a pas de mauvais effets connus sur la santé. De nombreuses études ont été menées sur les expositions aux RF faibles et n'ont découvert aucun effet biologique. Certaines études ont suggéré qu'il pouvait y avoir certains effets biologiques, mais ces résultats n'ont pas été confirmés par des recherches supplémentaires. Le DX-RH1GA / RM1GA uniquement a été testé et jugé conforme aux limites d'exposition aux rayonnements énoncées pour un environnement non contrôlé et respecte les règles d'exposition aux fréquences radioélectriques (RF) CNR-102 de l'IC.

⚠ CAUTION	• **This device complies with Industry Canada's licence-exempt RSSs. Operation is subject to the following two conditions: (1) this device may not cause interference, and (2) this device must accept any interference, including interference that may cause undesired operation of the device.** • **Le présent appareil est conforme aux CNR d'Industrie Canada applicables aux appareils radio exempts de licence. L'exploitation est autorisée aux deux conditions suivantes : (1) l'appareil ne doit pas produire de brouillage, et (2) l'utilisateur de l'appareil doit accepter tout brouillage radioélectrique subi, même si le brouillage est susceptible d'en compromettre le fonctionnement.**

Checking the Package

When opening the package, check that the following items are all included.
In the event of missing, defective, or damaged items, contact your nearest KEYENCE sales office.

■ DX-RH1/RH1GA

Main unit...1 Battery attachment cover...1 Instruction Manual...1

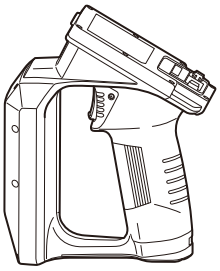

■ DX-RM1/RM1GA

Main unit...1 Battery attachment cover...1 Instruction Manual...1

Specifications

Model		DX-RH1/RH1GA (RFID high-output unit)	DX-RM1/RM1GA (RFID medium-output unit)
Display	Charging confirmation LED	2-color LED	
Operations	Hard keys	Trigger key × 1	Front keys × 27
RFID	Supported tags	ISO/IEC 18000-6 Type C (EPC Global Class 1 Gen 2)	
	Frequency range	DX-RH1: 916.8 - 920.8 MHz DX-RH1GA: 902.75 -927.25 MHz	DX-RM1: 920.6 - 923.0 MHz DX-RM1GA: 902.75 - 927.25 MHz
	Transmission output	1 W or less	DX-RM1:250mW or less DX-RM1GA:500mW or less
Power supply	Type	Dedicated lithium ion battery pack (DX-BC6)	
	Capacity	6270 mAh	
	Charging time	Approx. 7 hours	
Interface	Magnetic connector	Supported (charging/communication) * Connected to DX-UC4E, DX-UC1UL, DX-UC1M, or OP-88604 (magnetic charging cable)	
Environmental resistance	Ambient operating temperature	−20°C to +50°C, when charging 0°C to +40°C	
	Ambient operating humidity	20% to 85% RH (no condensation)	
	Ambient storage temperature	−20°C to +60°C (no freezing)	
	Ambient storage humidity	20% to 85% RH (no condensation)	
Dimensions		182.1 × 100 × 152.4 mm	222.4 x 70.6 x 50 mm
Weight		Approx. 405 g	Approx. 205 g

Outline Dimensional Drawings

■ **DX-RH1/RH1GA**

Unit: mm

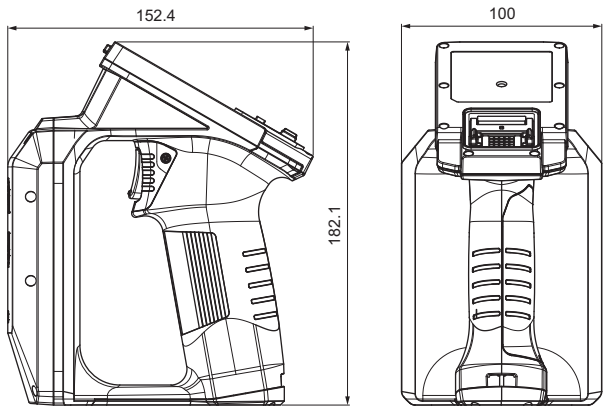

■ **DX-RM1/RM1GA**

Unit: mm

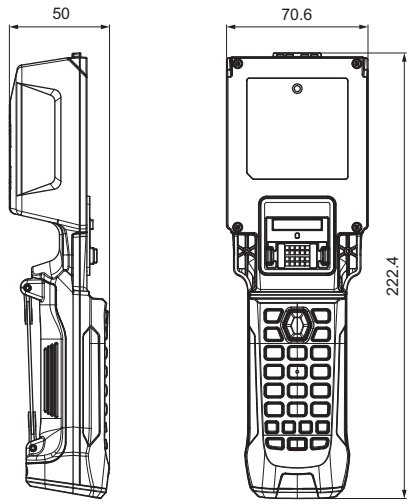

WARRANTIES AND DISCLAIMERS

(1) KEYENCE warrants the Products to be free of defects in materials and workmanship for a period of one (1) year from the date of shipment. If any models or samples were shown to Buyer, such models or samples were used merely to illustrate the general type and quality of the Products and not to represent that the Products would necessarily conform to said models or samples. Any Products found to be defective must be shipped to KEYENCE with all shipping costs paid by Buyer or offered to KEYENCE for inspection and examination. Upon examination by KEYENCE, KEYENCE, at its sole option, will refund the purchase price of, or repair or replace at no charge any Products found to be defective. This warranty does not apply to any defects resulting from any action of Buyer, including but not limited to improper installation, improper interfacing, improper repair, unauthorized modification, misapplication and mishandling, such as exposure to excessive current, heat, coldness, moisture, vibration or outdoors air. Components which wear are not warranted.

(2) KEYENCE is pleased to offer suggestions on the use of its various Products. They are only suggestions, and it is Buyer's responsibility to ascertain the fitness of the Products for Buyer's intended use. KEYENCE will not be responsible for any damages that may result from the use of the Products.

(3) The Products and any samples ("Products/Samples") supplied to Buyer are not to be used internally in humans, for human transportation, as safety devices or fail-safe systems, unless their written specifications state otherwise. Should any Products/Samples be used in such a manner or misused in any way, KEYENCE assumes no responsibility, and additionally Buyer will indemnify KEYENCE and hold KEYENCE harmless from any liability or damage whatsoever arising out of any misuse of the Products/Samples.

(4) **OTHER THAN AS STATED HEREIN, THE PRODUCTS/SAMPLES ARE PROVIDED WITH NO OTHER WARRANTIES WHATSOEVER. ALL EXPRESS, IMPLIED, AND STATUTORY WARRANTIES, INCLUDING, WITHOUT LIMITATION, THE WARRANTIES OF MERCHANTABILITY, FITNESS FOR A PARTICULAR PURPOSE, AND NON-INFRINGEMENT OF PROPRIETARY RIGHTS, ARE EXPRESSLY DISCLAIMED. IN NO EVENT SHALL KEYENCE AND ITS AFFILIATED ENTITIES BE LIABLE TO ANY PERSON OR ENTITY FOR ANY DIRECT, INDIRECT, INCIDENTAL, PUNITIVE, SPECIAL OR CONSEQUENTIAL DAMAGES (INCLUDING, WITHOUT LIMITATION, ANY DAMAGES RESULTING FROM LOSS OF USE, BUSINESS INTERRUPTION, LOSS OF INFORMATION, LOSS OR INACCURACY OF DATA, LOSS OF PROFITS, LOSS OF SAVINGS, THE COST OF PROCUREMENT OF SUBSTITUTED GOODS, SERVICES OR TECHNOLOGIES, OR FOR ANY MATTER ARISING OUT OF OR IN CONNECTION WITH THE USE OR INABILITY TO USE THE PRODUCTS, EVEN IF KEYENCE OR ONE OF ITS AFFILIATED ENTITIES WAS ADVISED OF A POSSIBLE THIRD PARTY'S CLAIM FOR DAMAGES OR ANY OTHER CLAIM AGAINST BUYER.** In some jurisdictions, some of the foregoing warranty disclaimers or damage limitations may not apply.

BUYER'S TRANSFER OBLIGATIONS:

If the Products/Samples purchased by Buyer are to be resold or delivered to a third party, Buyer must provide such third party with a copy of this document, all specifications, manuals, catalogs, leaflets and written information provided to Buyer pertaining to the Products/Samples.

E 1101-3

KEYENCE CORPORATION

1-3-14, Higashi-Nakajima, Higashi-Yodogawa-ku,
Osaka, 533-8555, Japan
PHONE: +81-6-6379-2211

www.keyence.com/glb

AUSTRIA Ph: +43 (0)2236 378266 0	**HONG KONG** Ph: +852-3104-1010	**NETHERLANDS** Ph: +31 (0)40 206 6100	**TAIWAN** Ph: +886-2-2721-8080
BELGIUM Ph: +32 (0)15 281 222	**HUNGARY** Ph: +36 1 802 7360	**PHILIPPINES** Ph: +63-(0)2-8981-5000	**THAILAND** Ph: +66-2-078-1090
BRAZIL Ph: +55-11-3045-4011	**INDIA** Ph: +91-44-4963-0900	**POLAND** Ph: +48 71 368 61 60	**UK & IRELAND** Ph: +44 (0)1908-696-900
CANADA Ph: +1-905-366-7655	**INDONESIA** Ph: +62-21-2966-0120	**ROMANIA** Ph: +40 (0)269 232 808	**USA** Ph: +1-201-930-0100
CHINA Ph: +86-21-3357-1001	**ITALY** Ph: +39-02-6688220	**SINGAPORE** Ph: +65-6392-1011	**VIETNAM** Ph: +84-24-3772-5555
CZECH REPUBLIC Ph: +420 220 184 700	**KOREA** Ph: +82-31-789-4300	**SLOVAKIA** Ph: +421 (0)2 5939 6461	
FRANCE Ph: +33 1 56 37 78 00	**MALAYSIA** Ph: +60-3-7883-2211	**SLOVENIA** Ph: +386 (0)1 4701 666	
GERMANY Ph: +49-6102-3689-0	**MEXICO** Ph: +52-55-8850-0100	**SWITZERLAND** Ph: +41 (0)43 455 77 30	

Specifications are subject to change without notice.

A6WW1-MAN-2121

Copyright (c) 2021 KEYENCE CORPORATION. All rights reserved.

17044GB 2121-1 96M17044 Printed in Japan

96M17044-1