IEI Integration Corp.

MODEL:

TRN-3200T

11.6” Medical Tablet PC with Intel® Core™ i7-3517UE CPU, 8 GB DDR3L SDRAM, USB 3.0, Micro HDMI, SD Card Slot, Wi-Fi, Bluetooth, 5-Megapixel Camera, RoHS Compliant

User Manual

Rev. 1.00 – October 4, 2016

RoHS Lead Free

Revision

Date	Version	Changes
October 4, 2016	1.00	Initial release

Copyright

COPYRIGHT NOTICE

In no event will the manufacturer be liable for direct, indirect, special, incidental, or consequential damages arising out of the use or inability to use the product or documentation, even if advised of the possibility of such damages.

This document contains proprietary information protected by copyright. All rights are reserved. No part of this manual may be reproduced by any mechanical, electronic, or other means in any form without prior written permission of the manufacturer.

TRADEMARKS

All registered trademarks and product names mentioned herein are used for identification purposes only and may be trademarks and/or registered trademarks of their respective owners.

Manual Conventions

WARNING

Warnings appear where overlooked details may cause damage to the equipment or result in personal injury. Warnings should be taken seriously.

CAUTION

Cautionary messages should be heeded to help reduce the chance of losing data or damaging the product.

NOTE

These messages inform the reader of essential but non-critical information. These messages should be read carefully as any directions or instructions contained therein can help avoid making mistakes.

HOT SURFACE

This symbol indicates a hot surface that should not be touched without taking care.

Table of Contents

1 INTRODUCTION 1

1.1 OVERVIEW 2
1.2 FEATURES 3
1.3 FRONT PANEL 3
1.4 REAR PANEL 4
1.5 TOP PANEL 4
1.6 SIDE PANELS 5
1.7 TECHNICAL SPECIFICATIONS 6
1.8 DIMENSIONS 8

2 UNPACKING 9

3 INSTALLATION 11

3.1 ANTI-STATIC PRECAUTIONS 12
3.2 INSTALLATION PRECAUTIONS 12
3.3 INSTALLING AND CHARGING THE BATTERY PACK 13
3.4 INSTALLING THE MOUNTING BRACKET 15
3.5 USING THE TABLET STAND 16

4 BIOS SETUP 17

4.1 INTRODUCTION 18
4.1.1 Starting Setup 18
4.1.2 Using Setup 18
4.1.3 Getting Help 19
4.1.4 BIOS Menu Bar 19
4.2 MAIN 20
4.3 ADVANCED 21
4.3.1 ACPI Settings 22
4.3.2 RTC Wake Settings 23
4.3.3 Trusted Computing 24
4.3.4 CPU Configuration 26

4.3.5 SATA Configuration *28*
4.3.6 Intel(R) Rapid Start Technology *29*
4.3.7 USB Configuration *30*
4.3.8 H/W Monitor *32*
4.3.8.1 Smart Fan Mode Configuration 33
4.3.9 IEI Feature *34*
4.4 CHIPSET 35
4.4.1 PCH-IO Configuration *36*
4.4.2 System Agent (SA) Configuration *38*
4.4.2.1 Graphics Configuration 39
4.4.2.2 Memory Configuration 40
4.5 BOOT 41
4.6 SECURITY 43
4.7 EXIT 44

A REGULATORY COMPLIANCE 45

B SAFETY PRECAUTIONS 50

B.1 SAFETY PRECAUTIONS 51
B.1.1 General Safety Precautions *51*
B.1.2 Anti-static Precautions *52*
B.1.3 Product Disposal *53*
B.2 MAINTENANCE AND CLEANING PRECAUTIONS 53
B.2.1 Maintenance and Cleaning *53*
B.2.2 Cleaning Tools *54*

C BIOS OPTIONS 55

D HAZARDOUS MATERIALS DISCLOSURE 58

List of Figures

Figure 1-1: TRN-3200T 2
Figure 1-2: Front Panel 3
Figure 1-3: Rear Panel 4
Figure 1-4: Top Panel 4
Figure 1-5: Side Panels 5
Figure 1-6: Dimensions (units in mm) 8
Figure 3-1: Removing the Tablet Stand Kit 13
Figure 3-2: Battery Pack Installation 14
Figure 3-3: Battery Capacity Indicators 14
Figure 3-4: Installing the Mounting Bracket 15
Figure 3-5: Releasing the Tablet Stand 16
Figure 3-6: Adjusting the Tablet Stand 16

List of Tables

Table 1-1: Technical Specifications 7
Table 2-1: Packing List 10
Table 4-1: BIOS Navigation Keys 19

BIOS Menus

BIOS Menu 1: Main 20
BIOS Menu 2: Advanced 21
BIOS Menu 3: ACPI Configuration 22
BIOS Menu 4: RTC Wake Settings 23
BIOS Menu 5: Trusted Computing 24
BIOS Menu 6: CPU Configuration 26
BIOS Menu 7: SATA Configuration 28
BIOS Menu 8: Intel(R) Rapid Start Technology 29
BIOS Menu 9: USB Configuration 30
BIOS Menu 10: Hardware Health Configuration 32
BIOS Menu 11: Smart Fan Mode Configuration 33
BIOS Menu 12: IEI Feature 34
BIOS Menu 13: Chipset 35
BIOS Menu 14: PCH-IO Configuration 36
BIOS Menu 15: System Agent (SA) Configuration 38
BIOS Menu 16: Graphics Configuration 39
BIOS Menu 17: Memory Configuration 40
BIOS Menu 18: Boot 41
BIOS Menu 19: Security 43
BIOS Menu 20:Exit 44

Chapter

1

Introduction

1.1 Overview

Figure 1-1: TRN-3200T

The TRN-3200T is an 11.6” medical tablet PC with the Intel® Core™ i7-3517UE processor and 8 GB DDR3L SDRAM. Its storage needs are met by the preinstalled 256 GB mSATA SSD, and by installing an SD card into the slot on the side panel.

The TRN-3200T is integrated with a selection of wireless communication technologies, including Wi-Fi and Bluetooth. There are two external USB 3.0 ports and one Micro HDMI port for peripherals. The TRN-3200T also features a 5-megapixel camera and digital microphone for video conferencing and data acquisition.

1.2 Features

Some of the standard features of the TRN-3200T tablet PC include:

- Intel® Core™ i7-3517UE processor platform
- 8 GB DDR3L SDRAM
- 5-point capacitive touchscreen
- Built-in 5-megapixel camera
- Built-in stereo speakers and digital microphone
- 802.11a/b/g/n/ac wireless LAN
- Bluetooth v4.0
- One Micro HDMI and two USB 3.0 ports on the side panel
- RoHS compliant

1.3 Front Panel

The front panel of the TRN-3200T has a 5-megapixel camera and an 11.6” LCD with a 5-point capacitive touchscreen.

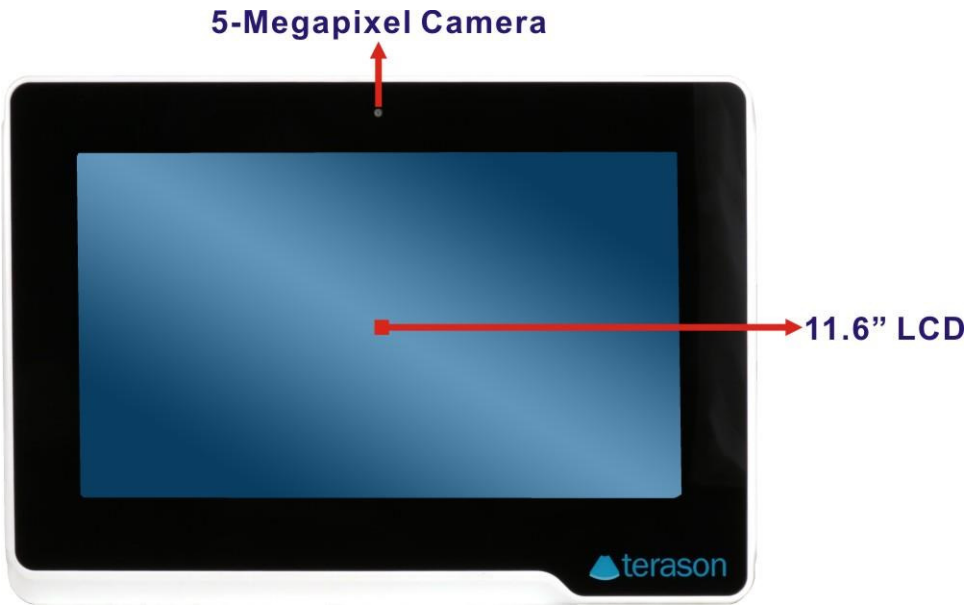

Figure 1-2: Front Panel

1.4 Rear Panel

The rear panel consists of the battery pack and stand. The screw holes for the mounting bracket are also located on the rear panel.

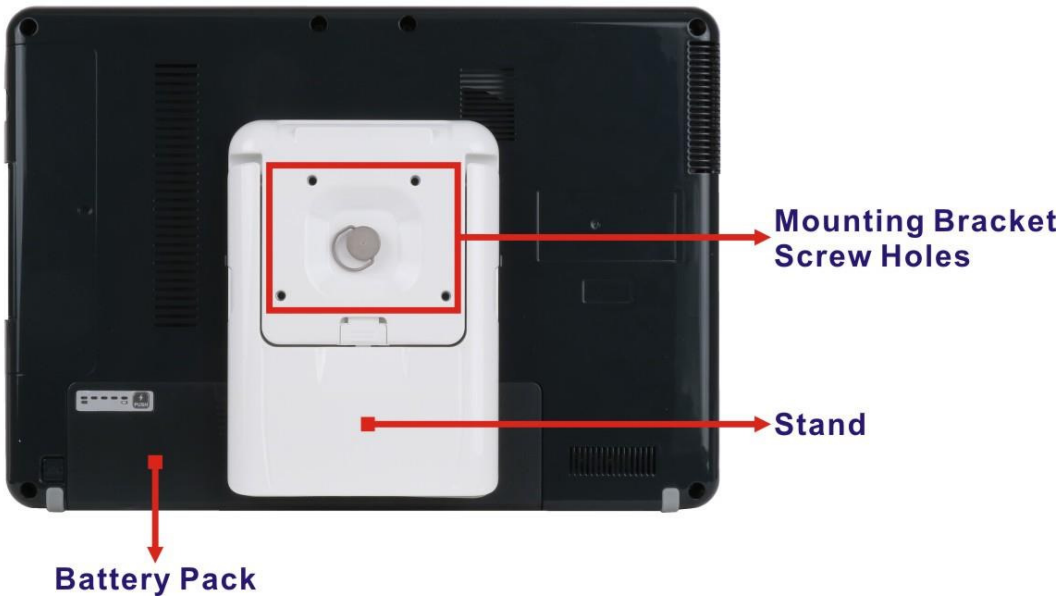

Figure 1-3: Rear Panel

1.5 Top Panel

The power button and digital microphone are located on the top panel shown in the following diagram.

Figure 1-4: Top Panel

1.6 Side Panels

The side panels contain the I/O interfaces as shown below.

Figure 1-5: Side Panels

NOTE:

The LED indication of the RJ-45 LAN port is listed below:

LED Status	Link Speed
Orange LED	100 Mbps
Green LED	1000 Mbps

1.7 Technical Specifications

The TRN-3200T technical specifications are listed in the table below.

Display	
LCD Size	11.6”
Brightness (cd/m^2)	300
Max. Resolution	1366 (H) x 768 (V)
Viewing Angle	85/85/85/85 degree (wide viewing angle, IPS)
Touchscreen	5-point capacitive, Gorilla Glass
System	
CPU	Intel® Core™ i7-3517UE
Memory	8 GB DDR3L SDRAM
OS	Windows Embedded Standard 7 or Windows 10 IoT, 64-bit
Storage	256 GB mSATA SSD
Front Camera	5-megapixel webcam (rear panel)
Communication	
Wireless LAN	802.11a/b/g/n/ac, diversity antenna design
Bluetooth	Bluetooth v4.0+EDR
I/O Interfaces	
Audio	2 x Stereo loudspeaker 1 x Headset jack (φ3.5mm) Built-in digital microphone
LAN	1 x RJ-45 (10/100/1000 Mbps)
Micro HDMI	1 x Micro HDMI slot
SD Card	1 x SD card slot
USB	2 x USB 3.0 (external) 2 x USB 3.0 (internal, one for engine connection, the other one is reserved for future use)

Power	
Power Adapter	AC Input: 100 V AC ~ 240 V AC DC Output: 19 V, 120 W
Battery	6500 mAH Li-ion battery pack with battery capacity LED indicators, 10.8 V, 3S2P (31603-000063-RS)
Environment	
Operation Temperature	0ºC ~ 35ºC
Storage Temperature	0ºC ~ 60ºC
Environment Protection	IP 5X wipe cleanable
Physical Characteristics	
Dimensions (W x H x D)	326.8 mm x 230 mm x 35.6 mm
Weight	3.5 kg

Table 1-1: Technical Specifications

1.8 Dimensions

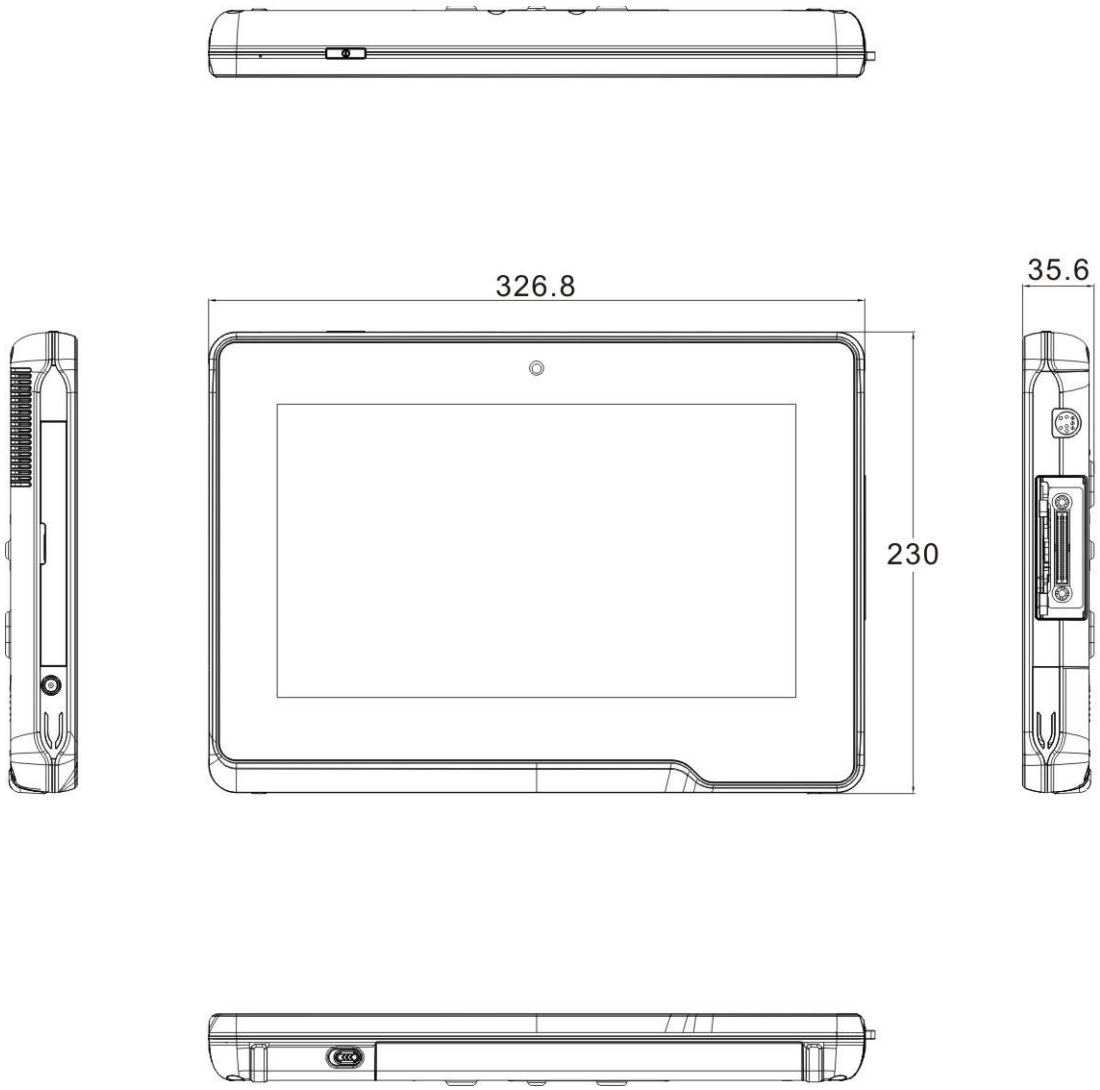

Figure 1-6: Dimensions (units in mm)

Chapter

2

Unpacking

To unpack the TRN-3200T, follow the steps below:

WARNING!

Only remove the protective plastic cover stuck to the front screen after installation. The plastic layer protects the monitor surface during installation process.

Step 1: Use sharp cutters to open the box.

Step 2: Lift the TRN-3200T and the packing material out of the box.

Step 3: Make sure all the components listed in the packing list are present.

The TRN-3200T tablet PC is shipped with the following components. If any of these items are missing or damaged, contact the distributor or sales representative immediately.

Quantity	Item	Image
1	TRN-3200T	
1	Power adapter	
1	Battery pack	
1	Mounting bracket	

Table 2-1: Packing List

Chapter

3

Installation

3.1 Anti-static Precautions

WARNING:

Failure to take ESD precautions during the maintenance of the TRN-3200T may result in permanent damage to the TRN-3200T and severe injury to the user.

Electrostatic discharge (ESD) can cause serious damage to electronic components, including the TRN-3200T. Dry climates are especially susceptible to ESD. It is therefore critical that whenever the TRN-3200T is accessed internally, or any other electrical component is handled, the following anti-static precautions are strictly adhered to.

- ***Wear an anti-static wristband***: - Wearing a simple anti-static wristband can help to prevent ESD from damaging the board.
- ***Self-grounding***: - Before handling the board touch any grounded conducting material. During the time the board is handled, frequently touch any conducting materials that are connected to the ground.
- ***Use an anti-static pad***: - When configuring the TRN-3200T, place it on an antic-static pad. This reduces the possibility of ESD damaging the TRN-3200T.
- ***Only handle the edges of the PCB***: - When handling the PCB, hold the PCB by the edges.

3.2 Installation Precautions

When installing the TRN-3200T, please follow the precautions listed below:

- **Power turned off**: When installing the TRN-3200T, make sure the power is off. Failing to turn off the power may cause severe injury to the body and/or damage to the system.
- **Certified Engineers**: Only certified engineers should install and modify onboard functionalities.

- **Anti-static Discharge**: If a user open the rear panel of the TRN-3200T, to configure the jumpers or plug in added peripheral devices, ground themselves first and wear and anti-static wristband.

3.3 Installing and Charging the Battery Pack

To install and charge the battery pack, please follow the steps below.

Step 1: Before installing the battery pack, the user has to remove the tablet stand kit secured on the rear panel (**Figure 3-1**).

Figure 3-1: Removing the Tablet Stand Kit

Step 2: Install the battery pack as shown in **Figure 3-2**.

Figure 3-2: Battery Pack Installation

Step 3: Re-install the tablet stand kit.

Step 4: To charge the battery, connect the TRN-3200T with a power source through the supplied power adapter.

Step 5: To view the battery capacity, press the battery capacity button on the battery (**Figure 3-3**).

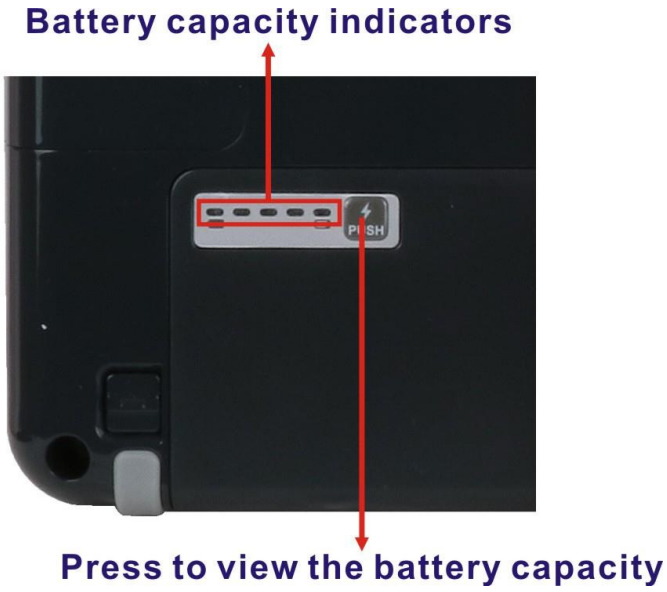

Figure 3-3: Battery Capacity Indicators

3.4 Installing the Mounting Bracket

The TRN-3200T can be fixed on a specific medical cart when the supplied mounting bracket is installed. To install the mounting bracket to the TRN-3200T, please follow the steps below.

Step 1: Attach the supplied mounting bracket to the TRN-3200T, aligning with the four mounting screw holes on the real panel (**Figure 3-4**).

Step 2: Secure the mounting bracket to the TRN-3200T with four retention screws (**Figure 3-4**).

Figure 3-4: Installing the Mounting Bracket

3.5 Using the Tablet Stand

The tablet stand secured on the rear panel is designed to support and stabilize the TRN-3200T on a surface.

Step 1: Push upward the button as indicated in **Figure 3-5** to eject the tablet stand.

Figure 3-5: Releasing the Tablet Stand

Step 2: Adjust the tablet stand as needed (**Figure 3-6**).

Figure 3-6: Adjusting the Tablet Stand

Chapter

4

BIOS Setup

4.1 Introduction

The BIOS is programmed onto the BIOS chip. The BIOS setup program allows changes to certain system settings. This chapter outlines the options that can be changed.

NOTE:

Some of the BIOS options may vary throughout the life cycle of the product and are subject to change without prior notice.

4.1.1 Starting Setup

The UEFI BIOS is activated when the computer is turned on. The setup program can be activated in one of two ways.

1. Press the **DEL** or **F2** key as soon as the system is turned on or
2. Press the **DEL** or **F2** key when the "**Press DEL or F2 to enter SETUP**" message appears on the screen.

If the message disappears before the **DEL or F2** key is pressed, restart the computer and try again.

4.1.2 Using Setup

Use the arrow keys to highlight items, press **ENTER** to select, use the PageUp and PageDown keys to change entries, press **F1** for help and press **ESC** to quit. Navigation keys are shown in **Table 4-1**.

Key	Function
Up arrow	Move to previous item
Down arrow	Move to next item
Left arrow	Move to the item on the left hand side
Right arrow	Move to the item on the right hand side
+	Increase the numeric value or make changes
-	Decrease the numeric value or make changes

Key	Function
Page Up	Move to the previous page
Page Dn	Move to the next page
Esc	Main Menu – Quit and not save changes into CMOS Status Page Setup Menu and Option Page Setup Menu -- Exit current page and return to Main Menu
F1	General help, only for Status Page Setup Menu and Option Page Setup Menu
F2	Load previous values
F3	Load optimized defaults
F4	Save changes and Exit BIOS

Table 4-1: BIOS Navigation Keys

4.1.3 Getting Help

When **F1** is pressed a small help window describing the appropriate keys to use and the possible selections for the highlighted item appears. To exit the Help Window press **Esc** or the **F1** key again.

4.1.4 BIOS Menu Bar

The **menu bar** on top of the BIOS screen has the following main items:

- Main – Changes the basic system configuration.
- Advanced – Changes the advanced system settings.
- Chipset – Changes the chipset settings.
- Security – Sets User and Supervisor Passwords.
- Boot – Changes the system boot configuration.
- Save & Exit – Selects exit options and loads default settings

The following sections completely describe the configuration options found in the menu items at the top of the BIOS screen and listed above.

4.2 Main

The **Main** BIOS menu (**BIOS Menu 1**) appears when the **BIOS Setup** program is entered.

The **Main** menu gives an overview of the basic system information.

```
Aptio Setup Utility - Copyright (C) 2012 American Megatrends, Inc.
 Main   Advanced   Chipset   Boot   Security   Save & Exit

BIOS Information                                  Set the Date. Use Tab to
BIOS Vendor                American Megatrends    switch between Date
Core Version               4.6.5.3                elements.
Compliancy                 UEFI 2.3; PI 1.2
Project Version            B374AR03.ROM
Build Date and Time        06/36/2016 17:29:48

iWDD Vendor                iEi
iWDD Version               B374ET05.bin

Processor Information                             ----------------------
Name                       IvyBridge              →←: Select Screen
Brand String               Intel(R) Core(TM) i7-351 ↑ ↓: Select Item
Frequency                  1600 MHz               Enter: Select
Processor ID               306a9                  +/-: Change Opt.
Stepping                   E1                     F1:  General Help
Number of Processors       2Core(s) / 4Thred(s)   F2:  Previous Values
Microcode Revision         13                     F3:  Optimized Defaults
GT Info                    GT2 (1000 MHz)         F4:  Save & Exit
                                                  ESC: Exit
IGFX VBIOS Version         2171
Memory RC Version          1.7.0.0
Total Memory               8192 MB (DDR3L)
Memory Frequency           1600 Mhz

PCH Information
Name                       PantherPoint
Stepping                   04/C1
LAN PHY Revision           N/A

ME FW Version              8.1.2.1318
ME Firmware SKU            1.5MB

SPI Clock Frequency
DOFR Support               Unsupported
Read Status Clock Frequency 33 MHz
Write Status Clock Frequency 33 MHz
Fast Read Status Clock Frequency 33 MHz

System Date                [Tue 08/16/2016]
System Time                [14:20:27]

Access Level               Administrator

Version 2.15.1229. Copyright (C) 2012 American Megatrends, Inc.
```

BIOS Menu 1: Main

The Main menu has two user configurable fields:

➔ **System Date [xx/xx/xx]**

Use the **System Date** option to set the system date. Manually enter the day, month and year.

➔ **System Time [xx:xx:xx]**

Use the **System Time** option to set the system time. Manually enter the hours, minutes and seconds.

4.3 Advanced

Use the **Advanced** menu (**BIOS Menu 2**) to configure the CPU and peripheral devices through the following sub-menus:

WARNING!

Setting the wrong values in the sections below may cause the system to malfunction. Make sure that the settings made are compatible with the hardware.

```
      Aptio Setup Utility - Copyright (C) 2012 American Megatrends, Inc.
  Main    Advanced   Chipset    Boot    Security  Save & Exit

 > ACPI Settings                                  System ACPI Parameters
 > RTC Wake Settings
 > Trusted Computing                              ----------------------
 > CPU Configuration                              →←: Select Screen
 > SATA Configuration                             ↑ ↓: Select Item
 > Intel(R) Rapid Start Technology                Enter: Select
 > USB Configuration                              +/-: Change Opt.
 > H/M Monitor                                    F1:  General Help
 > iEi Feature                                    F2:  Previous Values
                                                  F3: Optimized Defaults
                                                  F4: Save & Exit
                                                  ESC: Exit

        Version 2.15.1229. Copyright (C) 2012 American Megatrends, Inc.
```

BIOS Menu 2: Advanced

4.3.1 ACPI Settings

The **ACPI Settings** menu (**BIOS Menu 3**) configures the Advanced Configuration and Power Interface (ACPI) options.

```
Aptio Setup Utility - Copyright (C) 2012 American Megatrends, Inc.
Advanced

ACPI Settings                                   Select ACPI sleep state
                                                the system will enter
ACPI Sleep State                [S3 only (Suspend to…]  when the SUSPEND button
                                                is pressed.

                                                ----------------------
                                                →←: Select Screen
                                                ↑ ↓: Select Item
                                                Enter: Select
                                                +/-: Change Opt.
                                                F1:  General Help
                                                F2:  Previous Values
                                                F3:  Optimized Defaults
                                                F4:  Save & Exit
                                                ESC: Exit

Version 2.15.1229. Copyright (C) 2012 American Megatrends, Inc.
```

BIOS Menu 3: ACPI Configuration

➔ **ACPI Sleep State [S3 only (Suspend to RAM)]**

Use the **ACPI Sleep State** option to specify the sleep state the system enters when it is not being used.

➔ **S1 only (CPU Stop Clock)**	The system enters S1 (POS) sleep state. The system appears off. The CPU is stopped; RAM is refreshed; the system is running in a low power mode.
➔ **S3 only (Suspend to RAM)** DEFAULT	The caches are flushed and the CPU is powered off. Power to the RAM is maintained. The computer returns slower to a working state, but more power is saved.

4.3.2 RTC Wake Settings

The **RTC Wake Settings** menu (**BIOS Menu 4**) configures RTC wake event.

```
Aptio Setup Utility - Copyright (C) 2012 American Megatrends, Inc.
Advanced

Wake system with Fixed Time      [Disabled]

Enable or disable System
wake on alarm event.
When enabled, System
will wake on the
dat::hr::min::sec
specified
----------------------
→←: Select Screen
↑ ↓: Select Item
Enter: Select
+/-: Change Opt.
F1:  General Help
F2:  Previous Values
F3:  Optimized Defaults
F4:  Save & Exit
ESC: Exit

Version 2.15.1229. Copyright (C) 2012 American Megatrends, Inc.
```

BIOS Menu 4: RTC Wake Settings

➔ **Wake System with Fixed Time [Disabled]**

Use the **Wake System with Fixed Time** option to specify the time the system should be roused from a suspended state.

➔ **Disabled** **DEFAULT** The real time clock (RTC) cannot generate a wake event

➔ **Enabled** If selected, the following appears with values that can be selected:

*Wake up every day

*Wake up date

*Wake up hour

*Wake up minute

*Wake up second

After setting the alarm, the computer turns itself on from a suspend state when the alarm goes off.

4.3.3 Trusted Computing

Use the **Trusted Computing** menu (**BIOS Menu 5**) to configure settings related to the Trusted Computing Group (TCG) Trusted Platform Module (TPM).

```
Aptio Setup Utility - Copyright (C) 2012 American Megatrends, Inc.
Advanced

TPM20 Device Found                                  Enables or Disables BIOS
                                                    support for security
Security Device Support          [Enable]           device. O.S. will not
TPM State                        [Enabled]          show Security Device.
Pending Operation                [None]             TCG EFI protocol and
Platform Hierarchy               [Enabled]          INT1A interface will not
Storage Hierarchy                [Enable]           be available.
Endorsement Hierarchy            [Enable]
HashPolicy                       [Sha-1]            ----------------------
Device Select                    [Auto]             →←: Select Screen
                                                    ↑ ↓: Select Item
                                                    Enter: Select
                                                    +/-: Change Opt.
                                                    F1:  General Help
                                                    F2:  Previous Values
                                                    F3: Optimized Defaults
                                                    F4: Save & Exit
                                                    ESC: Exit

Version 2.15.1229. Copyright (C) 2012 American Megatrends, Inc.
```

BIOS Menu 5: Trusted Computing

➔ **Security Device Support [Enable]**

Use the **Security Device Support** option to configure the BIOS support for the security device.

➔ **Disable**		BIOS support for the security device is disabled.
➔ **Enable**	**DEFAULT**	BIOS support for the security device is enabled.

➔ **TPM State [Enabled]**

Use the **TPM State** option to enable or disable the security device.

➔ **Disabled**		Security device is disabled.
➔ **Enabled**	**DEFAULT**	Security device is enabled.

➔ **Pending operation [None]**

Use the **Pending operation** option to schedule an operation for the security device.

➔ **None**	**DEFAULT**	No operation is scheduled.
➔ **TPM Clear**		Clears the TPM

➔ **Platform Hierarchy [Enabled]**

Use the **Platform Hierarchy** option to enable or disable the platform hierarchy function.

➔ **Disabled**		Platform hierarchy function is disabled.
➔ **Enabled**	**DEFAULT**	Platform hierarchy function is enabled.

➔ **Storage Hierarchy [Enabled]**

Use the **Storage Hierarchy** option to enable or disable the storage hierarchy function.

➔ **Disabled**		Storage hierarchy function is disabled.
➔ **Enabled**	**DEFAULT**	Storage hierarchy function is enabled.

➔ **Endorsement Hierarchy [Enabled]**

Use the **Endorsement Hierarchy** option to enable or disable the endorsement hierarchy function.

➔ **Disabled**		Endorsement hierarchy function is disabled.
➔ **Enabled**	**DEFAULT**	Endorsement hierarchy function is enabled.

➔ **HashPolicy [Sha-1]**

Use the **HashPolicy** option to select the Hash Policy to use. Sha-2 is the most secure way, but might not be supported by all operating systems.

➔ **Device Select [Auto]**

Use the **Device Select** option to select TPM 1.2 or TPM 2.0 devices to be supported.

➔ **TPM 1.2**		Restricts support to TPM 1.2 devices.
➔ **TPM 2.0**		Restricts support to TPM 2.0 devices.
➔ **Auto**	**DEFAULT**	Supports both TPM 1.2 and 2.0 devices.

4.3.4 CPU Configuration

Use the **CPU Configuration** menu (**BIOS Menu 6**) to view detailed CPU specifications and configure the CPU.

```
Aptio Setup Utility - Copyright (C) 2012 American Megatrends, Inc.
Advanced

CPU Configuration                                  Enable for Windows XP and
                                                   Linux (OS optimized for
Intel(R) Core(TM) i7-3517UE CPU @ 1.70GHz          Hyper-Threading
CPU Signature                    306a9             Technology) and Disabled
Microcode Patch                  13                for other OS (OS not
Max CPU Speed                    1700 MHz          optimized for
Min CPU Speed                    800 MHz           Hyper-Threading
CPU Speed                        1600 MHz          Technology). When
Processor Cores                  2                 Disabled only thread per
Intel HT Technology              Supported         enabled core is enabled.
Intel VT-x Technology            Supported
Intel SMX Technology             Supported          ----------------------
64-bit                           Supported         →←: Select Screen
                                                   ↑ ↓: Select Item
L1 Data Cache                    32 KB x 2         Enter: Select
L1 Code Cache                    32 KB x 2         +/-: Change Opt.
L2 Cache                         256 KB x 2        F1:  General Help
L3 Cache                         4096 KB           F2:  Previous Values
                                                   F3: Optimized Defaults
 Hyper-threading                 [Enabled]         F4: Save & Exit
 Intel Virtualization Technology [Disabled]        ESC: Exit

Version 2.15.1229. Copyright (C) 2012 American Megatrends, Inc.
```

BIOS Menu 6: CPU Configuration

The CPU Configuration menu (**BIOS Menu 6**) lists the following CPU details:

- CPU Signature: Lists the CPU signature value.
- Microcode Patch: Lists the microcode patch being used.

- Max CPU Speed: Lists the maximum CPU processing speed.
- Min CPU Speed: Lists the minimum CPU processing speed.
- CPU Speed: Lists the CPU processing speed.
- Processor Cores: Lists the number of the processor core
- Intel HT Technology: Indicates if Intel HT Technology is supported by the CPU.
- Intel VT-x Technology: Indicates if Intel VT-x Technology is supported by the CPU.
- Intel SMX Technology: Indicates if Intel SMX Technology is supported by the CPU.
- 64-bit: Indicates if 64-bit system is supported by the CPU.
- L1 Data Cache: Lists the amount of data storage space on the L1 cache.
- L1 Code Cache: Lists the amount of code storage space on the L1 cache.
- L2 Cache: Lists the amount of storage space on the L2 cache.
- L3 Cache: Lists the amount of storage space on the L3 cache.

➔ **Hyper-threading [Enabled]**

Use the **Hyper-threading** to enable or disable the CPU hyper threading function.

➔ **Disabled**		Disables the use of hyper threading technology
➔ **Enabled**	**DEFAULT**	Enables the use of hyper threading technology

➔ **Intel Virtualization Technology [Disabled]**

Use the **Intel Virtualization Technology** option to enable or disable virtualization on the system. When combined with third party software, Intel® Virtualization technology allows several OSs to run on the same system at the same time.

➔ **Disabled**	**DEFAULT**	Disables Intel Virtualization Technology.
➔ **Enabled**		Enables Intel Virtualization Technology.

4.3.5 SATA Configuration

Use the **SATA Configuration** menu (**BIOS Menu 7**) to change and/or set the configuration of the SATA devices installed in the system.

```
Aptio Setup Utility - Copyright (C) 2012 American Megatrends, Inc.
Advanced

SATA Controller(s)            [Enabled]                  Enable or disable SATA
SATA Mode Selection           [AHCI]                     Device.

mSATA1 (M_SATA1) Port         256GB SATA Fla (256.0GB)   ---------------------
                                                         →←: Select Screen
                                                         ↑ ↓: Select Item
                                                         Enter: Select
                                                         +/-: Change Opt.
                                                         F1:  General Help
                                                         F2:  Previous Values
                                                         F3: Optimized Defaults
                                                         F4: Save & Exit
                                                         ESC: Exit

Version 2.15.1229. Copyright (C) 2012 American Megatrends, Inc.
```

BIOS Menu 7: SATA Configuration

➔ **SATA Controller(s) [Enabled]**

Use the **SATA Controller(s)** option to configure the SATA controller(s).

➔ **Enabled** **DEFAULT** Enables the on-board SATA controller(s).

➔ **Disabled** Disables the on-board SATA controller(s).

➔ **SATA Mode Selection [AHCI]**

Use the **SATA Mode Selection** option to determine how SATA devices operate.

➔ **IDE** Configures SATA devices as normal IDE device.

➔ **AHCI** **DEFAULT** Configures SATA devices as AHCI device.

4.3.6 Intel(R) Rapid Start Technology

The Intel® Rapid Start Technology is disabled by default.

```
Aptio Setup Utility - Copyright (C) 2012 American Megatrends, Inc.
Advanced

Intel(R) Rapid Start Technology     [Disabled]

Enable or disable
Intel(R) Rapid Start
Technology.

---------------------
→←: Select Screen
↑ ↓: Select Item
Enter: Select
+/-: Change Opt.
F1:  General Help
F2:  Previous Values
F3: Optimized Defaults
F4: Save & Exit
ESC: Exit

Version 2.15.1229. Copyright (C) 2012 American Megatrends, Inc.
```

BIOS Menu 8: Intel(R) Rapid Start Technology

4.3.7 USB Configuration

Use the **USB Configuration** menu (**BIOS Menu 9**) to read USB configuration information and configure the USB settings.

```
Aptio Setup Utility - Copyright (C) 2012 American Megatrends, Inc.
Advanced

USB Configuration                                   Enables Legacy USB
                                                    support. AUTO option
USB Devices:                                        disables legacy support
      1 Drive, 1 Keyboard, 1 Point                  if no USB devices are
                                                    connected. DISABLE
Legacy USB Support              [Enabled]           option will keep USB
USB3.0 Support                  [Enabled]           devices available only
XHCI Hand-off                   [Enabled]           for EFI applications.
EHCI Hand-off                   [Disabled]
Port 60/64 Emulation            [Enabled]           ---------------------
                                                    →←: Select Screen
USB hardware delays and time-outs:                  ↑ ↓: Select Item
USB transfer time-out           [20 sec]            Enter: Select
Device reset time-out           [20 sec]            +/-: Change Opt.
Device power-up delay           [Auto]              F1:  General Help
                                                    F2:  Previous Values
Mass Storage Devices:                               F3: Optimized Defaults
Generic STORAGE DEVICE 0208     [Auto]              F4: Save & Exit
                                                    ESC: Exit
Version 2.15.1229. Copyright (C) 2012 American Megatrends, Inc.
```

BIOS Menu 9: USB Configuration

➔ **USB Devices**

The **USB Devices Enabled** field lists the USB devices that are enabled on the system.

➔ **Legacy USB Support [Enabled]**

Use the **Legacy USB Support** BIOS option to enable USB mouse and USB keyboard support. Normally if this option is not enabled, any attached USB mouse or USB keyboard does not become available until a USB compatible operating system is fully booted with all USB drivers loaded. When this option is enabled, any attached USB mouse or USB keyboard can control the system even when there is no USB driver loaded onto the system.

- ➔ **Enabled** **DEFAULT** Legacy USB support enabled
- ➔ **Disabled** Legacy USB support disabled
- ➔ **Auto** Legacy USB support disabled if no USB devices are connected

➔ **USB3.0 Support [Enabled]**

Use the **USB3.0 Support** option to enable or disable the USB 3.0 controller.

- ➔ **Enabled** **DEFAULT** The USB 3.0 controller is enabled.
- ➔ **Disabled** The USB 3.0 controller is disabled.

➔ **XHCI Hand-off [Enabled]**

This is a workaround for system without XHCI hand-off support. The XHCI ownership change should be claimed by XHCI driver.

- ➔ **Enabled** **DEFAULT** XHCI hand-off function support is enabled.
- ➔ **Disabled** XHCI hand-off function support is disabled.

➔ **EHCI Hand-off [Disabled]**

This is a workaround for system without EHCI hand-off support. The EHCI ownership change should be claimed by EHCI driver.

- ➔ **Disabled** **DEFAULT** EHCI hand-off function support is disabled.
- ➔ **Enabled** EHCI hand-off function support is enabled.

➔ **Port 60/64 Emulation [Enabled]**

Use the **Port 60/64 Emulation** BIOS option to enable or disable I/O port 60h/64h emulation support. This item should be enabled for the complete USB keyboard legacy support for non-USB aware OS.

- ➔ **Disabled** I/O port 60h/64h emulation support is disabled.
- ➔ **Enabled** **DEFAULT** I/O port 60h/64h emulation support is enabled.

➔ **USB hardware delays and time-outs**

The **USB hardware delays and time-outs** field allows configuration for the USB hardware delays and time-outs.

➔ **Mass Storage Devices**

The **Mass Storage Devices** field allows setting for the mass storage device emulation type.

4.3.8 H/W Monitor

The H/W Monitor menu (**BIOS Menu 10**) shows the operating temperature.

```
Aptio Setup Utility - Copyright (C) 2012 American Megatrends, Inc.
Advanced

H/W Monitor                                   Smart Fan Mode Select.
CPU Temperature              :+53 C
SYS Temperature              :+40 C           ---------------------
FAN1 Speed                   :3648 RPM        →←: Select Screen
FAN2 Speed                   :3062 RPM        ↑ ↓: Select Item
> Smart Fan Mode Configuration                 Enter: Select
                                               +/-: Change Opt.
                                               F1:  General Help
                                               F2:  Previous Values
                                               F3: Optimized Defaults
                                               F4: Save & Exit
                                               ESC: Exit

Version 2.15.1229. Copyright (C) 2012 American Megatrends, Inc.
```

BIOS Menu 10: Hardware Health Configuration

➔ **PC Health Status**

The following system parameters and values are shown. The system parameter that is monitored is:

- System Temperatures:
  - CPU Temperature
  - System Temperature
- Fan Speed:
  - Fan 1 Speed
  - Fan 2 Speed

4.3.8.1 Smart Fan Mode Configuration

Use the **Smart Fan Mode Configuration** submenu (**BIOS Menu 11**) to configure the system fan temperature and speed settings.

```
Aptio Setup Utility - Copyright (C) 2012 American Megatrends, Inc.
Advanced

Smart Fan Mode Configuration                    Smart Fan Mode Select

Fan Smart Fan Control1          [Auto Mode]
Auto mode fan off temperature   40              ---------------------
Auto mode fan start temperature 50              →←: Select Screen
Auto mode fan start PWM         30              ↑ ↓: Select Item
Auto mode fan slope PWM         1               Enter: Select
                                                +/-:  Change Opt.
Fan Smart Fan Control2          [Auto Mode]     F1:  General Help
Auto mode fan off temperature   40              F2:  Previous Values
Auto mode fan start temperature 50              F3:  Optimized Defaults
Auto mode fan start PWM         30              F4:  Save & Exit
Auto mode fan slope PWM         1               ESC: Exit

Version 2.15.1229. Copyright (C) 2012 American Megatrends, Inc.
```

BIOS Menu 11: Smart Fan Mode Configuration

➔ **Fan Smart Fan Control1/Fan Smart Fan Control2 [Auto Mode]**

Use the **Fan Smart Fan Control1/Fan Smart Fan Control2** option to configure the system smart fans.

➔ **Auto Mode** **DEFAULT** The fan adjusts its speed using Auto Mode settings.

➔ **Manual Mode** The fan spins at the speed set in Manual Mode settings.

➔ **Auto mode fan start/off temperature**

Use the + or – key to change the **Auto mode fan start/off temperature** value. Enter a decimal number between 1 and 100.

➔ **Auto mode fan start PWM**

Use the + or – key to change the **Auto mode fan start PWM** value. Enter a decimal number between 1 and 255.

➔ **Auto mode fan slope PWM**

Use the + or – key to change the **Auto mode fan slope PWM** value. Enter a decimal number between 1 and 64.

4.3.9 IEI Feature

Use the **IEI Feature** menu (**BIOS Menu 12**) to configure One Key Recovery function.

```
Aptio Setup Utility - Copyright (C) 2012 American Megatrends, Inc.
Advanced

iEi Feature                                   Auto Recovery Function
                                              Reboot and recover
Auto Recovery Function          [Disabled]    system automatically
                                              within 10 min, when OS
                                              crashes. Please install
                                              Auto Recovery API
                                              service before enabling
                                              this function
                                              ---------------------
                                              →←: Select Screen
                                              ↑ ↓: Select Item
                                              Enter: Select
                                              +/-: Change Opt.
                                              F1:  General Help
                                              F2:  Previous Values
                                              F3: Optimized Defaults
                                              F4: Save & Exit
                                              ESC: Exit
                                              ESC Exit
Version 2.15.1229. Copyright (C) 2012 American Megatrends, Inc.
```

BIOS Menu 12: IEI Feature

➔ **Auto Recovery Function [Disabled]**

Use the **Auto Recovery Function** BIOS option to enable or disable the auto recovery function of the IEI One Key Recovery.

➔ **Disabled** **DEFAULT** Auto recovery function disabled

➔ **Enabled** Auto recovery function enabled

4.4 Chipset

Use the **Chipset** menu (**BIOS Menu 13**) to access the PCH and System Agent (SA) configuration menus.

WARNING!

Setting the wrong values for the Chipset BIOS selections in the Chipset BIOS menu may cause the system to malfunction.

```
      Aptio Setup Utility - Copyright (C) 2012 American Megatrends, Inc.
  Main    Advanced  Chipset    Boot    Security  Save & Exit

> PCH-IO Configuration                          PCH Parameters
> System Agent (SA) Configuration

                                                ---------------------
                                                →←: Select Screen
                                                ↑ ↓: Select Item
                                                Enter:  Select
                                                +/-: Change Opt.
                                                F1:  General Help
                                                F2:  Previous Values
                                                F3:  Optimized Defaults
                                                F4:  Save & Exit
                                                ESC: Exit

        Version 2.15.1229. Copyright (C) 2012 American Megatrends, Inc.
```

BIOS Menu 13: Chipset

4.4.1 PCH-IO Configuration

Use the **PCH-IO Configuration** menu (**BIOS Menu 14**) to configure the PCH IO settings.

```
Aptio Setup Utility - Copyright (C) 2012 American Megatrends, Inc.
                    Chipset

PCH-IO Configuration                                  Control Detection of
Azalia                          [Enabled]             the Azalia device.
  Azalia Internal HDMI Codec    [Enabled]             Disabled = Azalia will
                                                      be unconditionally
Internal USB Port(CAM1) Function [Enabled]            disabled.
Micro-SD Function               [Enabled]             Enabled = Azalia will be
WIFI Radio Function             [Enabled]             unconditionally
Bluetooth Function              [Enabled]             Enabled.
Windows Rotation Function       [Disabled]
                                                      ---------------------
                                                      →←: Select Screen
                                                      ↑ ↓: Select Item
                                                      Enter: Select
                                                      +/-: Change Opt.
                                                      F1:  General Help
                                                      F2:  Previous Values
                                                      F3: Optimized Defaults
                                                      F4: Save & Exit
                                                      ESC: Exit

Version 2.15.1229. Copyright (C) 2012 American Megatrends, Inc.
```

BIOS Menu 14: PCH-IO Configuration

➔ **Azalia [Enabled]**

The **Azalia** option enables or disables the HD Audio controller.

➔ **Disabled** The onboard HD Audio controller is disabled.

➔ **Enabled** **DEFAULT** The onboard HD Audio controller is enabled.

➔ **Azalia Internal HDMI Codec [Enabled]**

The **Azalia Internal HDMI Codec** option enables or disables the HDMI codec for Azalia.

➔ **Disabled** The HDMI codec for Azalia is disabled.

➔ **Enabled** **DEFAULT** The HDMI codec for Azalia is enabled.

➔ **Internal USB Port (CAM1) Function [Enabled]**

Use the **Internal USB Port (CAM1) Function** option to enable or disable the camera function.

➔ **Disabled**		The camera function is disabled.
➔ **Enabled**	**DEFAULT**	The camera function is enabled.

➔ **Micro-SD Function [Enabled]**

Use the **Micro-SD Function** option to enable or disable the SD card slot.

➔ **Disabled**		The SD card slot is disabled.
➔ **Enabled**	**DEFAULT**	The SD card slot is enabled.

➔ **WIFI Radio Function [Enabled]**

Use the **WIFI Radio Function** option to enable or disable the Wi-Fi function.

➔ **Disabled**		The Wi-Fi function is disabled.
➔ **Enabled**	**DEFAULT**	The Wi-Fi function is enabled.

➔ **Bluetooth Function [Enabled]**

Use the **Bluetooth Function** option to enable or disable the Bluetooth function.

➔ **Disabled**		The Bluetooth function is disabled.
➔ **Enabled**	**DEFAULT**	The Bluetooth function is enabled.

➔ **Windows Rotation Function [Disabled]**

Use the **Windows Rotation Function** option to enable or disable the screen rotation function.

➔ **Disabled**	**DEFAULT**	The screen rotation function is disabled.
➔ **Enabled**		The screen rotation function is enabled.

4.4.2 System Agent (SA) Configuration

Use the **System Agent (SA) Configuration** menu (**BIOS Menu 15**) to configure the System Agent (SA) parameters.

```
Aptio Setup Utility - Copyright (C) 2012 American Megatrends, Inc.
Chipset

VT-d                                [Disabled]          Check to enable VT-d
> Graphics Configuration                                function on MCH.
> Memory Configuration
                                                        ---------------------
                                                        →←: Select Screen
                                                        ↑ ↓: Select Item
                                                        Enter: Select
                                                        +/-: Change Opt.
                                                        F1:  General Help
                                                        F2:  Previous Values
                                                        F3:  Optimized Defaults
                                                        F4:  Save & Exit
                                                        ESC: Exit

Version 2.15.1229. Copyright (C) 2012 American Megatrends, Inc.
```

BIOS Menu 15: System Agent (SA) Configuration

➔ **VT-d [Disabled]**

Use the **VT-d** option to enable or disable VT-d support.

➔ **Disabled**	**DEFAULT**	Disables VT-d support.
➔ **Enabled**		Enables VT-d support.

4.4.2.1 Graphics Configuration

Use the **Graphics Configuration** menu (**BIOS Menu 16**) to configure the graphics settings

```
Aptio Setup Utility - Copyright (C) 2012 American Megatrends, Inc.
                    Chipset

Graphics Configuration                          Select which of
                                                IGFX/PEG/PCI Graphics
Primary Display                  [Auto]         device should be Primary
DVMT Pre-Allocated               [256M]         Display Or select SG for
DVMT Total Gfx Mem               [MAX]          Switchable Gfx.

Primary IGFX Boot Display        [VBIOS Default]  ---------------------
                                                →←: Select Screen
                                                ↑ ↓: Select Item
                                                Enter:  Select
                                                +/-: Change Opt.
                                                F1:  General Help
                                                F2:  Previous Values
                                                F3:  Optimized Defaults
                                                F4:  Save & Exit
                                                ESC: Exit

Version 2.15.1229. Copyright (C) 2012 American Megatrends, Inc.
```

BIOS Menu 16: Graphics Configuration

➔ **Primary Display [Auto]**

Use the **Primary Display** option to select the graphics controller used as the primary boot device.

- Auto **DEFAULT**
- IGFX
- PEG

➔ **DVMT Pre-Allocated [256M]**

Use the **DVMT Pre-Allocated** option to specify a fixed amount of memory that can be allocated for the internal graphics device. Configuration options are listed below.

- 32M
- 64M
- 128M

- 256M **DEFAULT**
- 512M

➔ **DVMT Total Gfx Mem [MAX]**

Use the **DVMT Total Gfx Mem** option to specify the maximum amount of memory that can be allocated for the internal graphics device. Configuration options are listed below.

- 128M
- 256M
- MAX **DEFAULT**

➔ **Primary IGFX Boot Display [VBIOS Default]**

Use the **Primary IGFX Boot Display** option to select the display device used by the system when it boots.

4.4.2.2 Memory Configuration

Use the **Memory Configuration** menu (**BIOS Menu 17**) to display the memory information.

```
Aptio Setup Utility - Copyright (C) 2012 American Megatrends, Inc.
                    Chipset

Memory Information

Memory Frequency                1600 Mhz          ---------------------
Total Memory                    8192 MB (DDR3L)   →←: Select Screen
                                                  ↑ ↓: Select Item
Memory Slot DIMM1               8192 MB (DDR3L)   Enter: Select
                                                  +/-: Change Opt.
                                                  F1:  General Help
                                                  F2:  Previous Values
                                                  F3:  Optimized Defaults
                                                  F4:  Save & Exit
                                                  ESC: Exit

Version 2.15.1229. Copyright (C) 2012 American Megatrends, Inc.
```

BIOS Menu 17: Memory Configuration

4.5 Boot

Use the **Boot** menu (**BIOS Menu 18**) to configure system boot options.

```
      Aptio Setup Utility - Copyright (C) 2012 American Megatrends, Inc.
  Main    Advanced   Chipset    Boot    Security  Save & Exit

Boot Configuration                                  Select the keyboard
Bootup NumLock State            [On]                NumLock state
Quiet Boot                      [Enabled]
Option ROM Messages             [Force BIOS]        ---------------------
UEFI Boot                       [Disabled]          →←: Select Screen
                                                    ↑ ↓: Select Item
Boot Option Priorities                              Enter:  Select
Boot Option #1                  [PO: 256GB SATA Flas…]  +/-: Change Opt.
                                                    F1:  General Help
Hard Drive BBS Priorities                           F2:  Previous Values
                                                    F3:  Optimized Defaults
                                                    F4:  Save & Exit
                                                    ESC: Exit
        Version 2.15.1229. Copyright (C) 2012 American Megatrends, Inc.
```

BIOS Menu 18: Boot

➔ **Bootup NumLock State [On]**

Use the **Bootup NumLock State** BIOS option to specify if the number lock setting must be modified during boot up.

➔ **On** **DEFAULT** Allows the Number Lock on the keyboard to be enabled automatically when the computer system boots up. This allows the immediate use of the 10-key numeric keypad located on the right side of the keyboard. To confirm this, the Number Lock LED light on the keyboard is lit.

➔ **Off** Does not enable the keyboard Number Lock automatically. To use the 10-keys on the keyboard, press the Number Lock key located on the upper left-hand corner of the 10-key pad. The Number Lock LED on the keyboard lights up when the Number Lock is engaged.

➔ **Quiet Boot [Enabled]**

Use the **Quiet Boot** BIOS option to select the screen display when the system boots.

➔ **Disabled**		Normal POST messages displayed
➔ **Enabled**	**DEFAULT**	OEM Logo displayed instead of POST messages

➔ **Option ROM Messages [Force BIOS]**

Use the **Option ROM Messages** option to set the Option ROM display mode.

➔ **Force BIOS**	**DEFAULT**	Sets display mode to force BIOS.
➔ **Keep Current**		Sets display mode to current.

➔ **UEFI Boot [Disabled]**

Use the **UEFI Boot** option to enable or disable to boot from the UEFI devices.

➔ **Enabled**		Boot from UEFI devices is enabled.
➔ **Disabled**	**DEFAULT**	Boot from UEFI devices is disabled.

➔ **Boot Option #1 [PO: 256GB SATA Flas…]**

Use the **Boot Option #1** option to specify the boot priority from the available devices.

➔ **Hard Drive BBS Priorities**

Use the **Hard Drive BBS Priorities** option to set the order of the legacy devices in this group.

4.6 Security

Use the **Security** menu (**BIOS Menu 19**) to set system and user passwords.

```
      Aptio Setup Utility - Copyright (C) 2012 American Megatrends, Inc.
  Main    Advanced   Chipset    Boot    Security  Save & Exit

Password Description                                  Set Administrator
                                                      Password
If ONLY the Administrator's password is set,
then this only limits access to Setup and is          ---------------------
only asked for when entering Setup                    →←: Select Screen
If ONLY the User's password is set, then this         ↑ ↓: Select Item
is a power on password and must be entered to         Enter:  Select
boot or enter Setup. In Setup the User will           +/-: Change Opt.
have Administrator rights.                            F1:  General Help
The password length must be                           F2:  Previous Values
in the following range:                               F3: Optimized Defaults
Minimum length                  3                     F4: Save & Exit
Maximum length                  20                    ESC: Exit

Administrator Password
User Password

HDD Security Configuration:
PO:256GB SATA F

        Version 2.15.1229. Copyright (C) 2012 American Megatrends, Inc.
```

BIOS Menu 19: Security

➔ **Administrator Password**

Use the **Administrator Password** to set or change a administrator password.

➔ **User Password**

Use the **User Password** to set or change a user password.

4.7 Exit

Use the **Exit** menu (**BIOS Menu 20**) to load default BIOS values, optimal failsafe values and to save configuration changes.

```
Aptio Setup Utility - Copyright (C) 2012 American Megatrends, Inc.
Main   Advanced   Chipset   Boot   Security   Save & Exit

Save Changes and Reset                    Exit system setup after
Discard Changes and Reset                 saving the changes.

Restore Defaults                          ---------------------
Save as User Defaults                     →←: Select Screen
Restore User Defaults                     ↑ ↓: Select Item
                                          Enter: Select
                                          +/-: Change Opt.
                                          F1:  General Help
                                          F2:  Previous Values
                                          F3: Optimized Defaults
                                          F4: Save & Exit
                                          ESC: Exit

Version 2.15.1229. Copyright (C) 2012 American Megatrends, Inc.
```

BIOS Menu 20:Exit

➔ **Save Changes and Reset**

Use the **Save Changes and Reset** option to save the changes made to the BIOS options and to exit the BIOS configuration setup program.

➔ **Discard Changes and Reset**

Use the **Discard Changes and Reset** option to exit the system without saving the changes made to the BIOS configuration setup program.

➔ **Restore Defaults**

Use the **Restore Defaults** option to load the optimal default values for each of the parameters on the Setup menus. **F3 key can be used for this operation.**

➔ **Save as User Defaults**

Use the **Save as User Defaults** option to save the changes done so far as user defaults.

➔ **Restore User Defaults**

Use the **Restore User Defaults** option to restore the user defaults to all the setup options.

Appendix

A

Regulatory Compliance

DECLARATION OF CONFORMITY

This equipment is in conformity with the following EU directives:

- EMC Directive 2004/108/EC
- Low-Voltage Directive 2006/95/EC
- RoHS II Directive 2011/65/EU
- Ecodesign Directive 2009/125/EC

If the user modifies and/or install other devices in the equipment, the CE conformity declaration may no longer apply.

If this equipment has telecommunications functionality, it also complies with the requirements of the R&TTE Directive 1999/5/EC.

English IEI Integration Corp declares that this equipment is in compliance with the essential requirements and other relevant provisions of Directive 1999/5/EC.
Български [Bulgarian] IEI Integration Corp. декларира, че този оборудване е в съответствие със съществените изисквания и другите приложими правила на Директива 1999/5/EC.
Česky [Czech] IEI Integration Corp tímto prohlašuje, že tento zařízení je ve shodě se základními požadavky a dalšími příslušnými ustanoveními směrnice 1999/5/ES.
Dansk [Danish] IEI Integration Corp erklærer herved, at følgende udstyr overholder de væsentlige krav og øvrige relevante krav i direktiv 1999/5/EF.
Deutsch [German] IEI Integration Corp, erklärt dieses Gerät entspricht den grundlegenden Anforderungen und den weiteren entsprechenden Vorgaben der Richtlinie 1999/5/EU.
Eesti [Estonian] IEI Integration Corp deklareerib seadme seadme vastavust direktiivi 1999/5/EÜ põhinõuetele ja nimetatud direktiivist tulenevatele teistele asjakohastele sätetele.

Español [Spanish] IEI Integration Corp declara que el equipo cumple con los requisitos esenciales y cualesquiera otras disposiciones aplicables o exigibles de la Directiva 1999/5/CE.
Ελληνική [Greek] IEI Integration Corp ΔΗΛΩΝΕΙ ΟΤΙ ΕΞΟΠΛΙΣΜΟΣ ΣΥΜΜΟΡΦΩΝΕΤΑΙ ΠΡΟΣ ΤΙΣ ΟΥΣΙΩΔΕΙΣ ΑΠΑΙΤΗΣΕΙΣ ΚΑΙ ΤΙΣ ΛΟΙΠΕΣ ΣΧΕΤΙΚΕΣ ΔΙΑΤΑΞΕΙΣ ΤΗΣ ΟΔΗΓΙΑΣ 1999/5/ΕΚ.
Français [French] IEI Integration Corp déclare que l'appareil est conforme aux exigences essentielles et aux autres dispositions pertinentes de la directive 1999/5/CE.
Italiano [Italian] IEI Integration Corp dichiara che questo apparecchio è conforme ai requisiti essenziali ed alle altre disposizioni pertinenti stabilite dalla direttiva 1999/5/CE.
Latviski [Latvian] IEI Integration Corp deklarē, ka iekārta atbilst būtiskajām prasībām un citiem ar to saistītajiem noteikumiem Direktīvas 1999/5/EK.
Lietuvių [Lithuanian] IEI Integration Corp deklaruoja, kad šis įranga atitinka esminius reikalavimus ir kitas 1999/5/EB Direktyvos nuostatas.
Nederlands [Dutch] IEI Integration Corp dat het toestel toestel in overeenstemming is met de essentiële eisen en de andere relevante bepalingen van richtlijn 1999/5/EG.
Malti [Maltese] IEI Integration Corp jiddikjara li dan prodott jikkonforma mal-ħtiġijiet essenzjali u ma provvedimenti oħrajn relevanti li hemm fid-Dirrettiva 1999/5/EC.
Magyar [Hungarian] IEI Integration Corp nyilatkozom, hogy a berendezés megfelel a vonatkozó alapvetõ követelményeknek és az 1999/5/EC irányelv egyéb elõírásainak.
Polski [Polish] IEI Integration Corp oświadcza, że wyrobu jest zgodny z zasadniczymi wymogami oraz pozostałymi stosownymi postanowieniami Dyrektywy 1999/5/EC.
Português [Portuguese] IEI Integration Corp declara que este equipamento está conforme com os requisitos essenciais e outras disposições da Directiva 1999/5/CE.

Româna [Romanian] IEI Integration Corp declară că acest echipament este in conformitate cu cerinţele esenţiale şi cu celelalte prevederi relevante ale Directivei 1999/5/CE.
Slovensko [Slovenian] IEI Integration Corp izjavlja, da je ta opreme v skladu z bistvenimi zahtevami in ostalimi relevantnimi določili direktive 1999/5/ES.
Slovensky [Slovak] IEI Integration Corp týmto vyhlasuje, že zariadenia spĺňa základné požiadavky a všetky príslušné ustanovenia Smernice 1999/5/ES.
Suomi [Finnish] IEI Integration Corp vakuuttaa täten että laitteet on direktiivin 1999/5/EY oleellisten vaatimusten ja sitä koskevien direktiivin muiden ehtojen mukainen.
Svenska [Swedish] IEI Integration Corp förklarar att denna utrustningstyp står I överensstämmelse med de väsentliga egenskapskrav och övriga relevanta bestämmelser som framgår av direktiv 1999/5/EG.

FCC WARNING

This equipment complies with Part 15 of the FCC Rules. Operation is subject to the following two conditions:

- This device may not cause harmful interference, and
- This device must accept any interference received, including interference that may cause undesired operation.

This equipment has been tested and found to comply with the limits for a Class B digital device, pursuant to part 15 of the FCC Rules. These limits are designed to provide reasonable protection against harmful interference when the equipment is operated in a commercial environment. This equipment generates, uses, and can radiate radio frequency energy and, if not installed and used in accordance with the instruction manual, may cause harmful interference to radio communications. Operation of this equipment in a residential area is likely to cause harmful interference in which case the user will be required to correct the interference at his own expense.

If this equipment does cause harmful interference to radio or television reception, which can be determined by turning the equipment off and on, the user is encouraged to try to correct the interference by one or more of the following measures:

—Reorient or relocate the receiving antenna.

—Increase the separation between the equipment and receiver.

—Connect the equipment into an outlet on a circuit different from that to which the receiver is connected.

—Consult the dealer or an experienced radio/TV technician for help.

Changes or modifications not expressly approved by the party responsible for compliance could void the user‘s authority to operate the equipment.

Appendix

B

Safety Precautions

WARNING:

The precautions outlined in this chapter should be strictly followed. Failure to follow these precautions may result in permanent damage to the TRN-3200T.

B.1 Safety Precautions

Please follow the safety precautions outlined in the sections that follow:

B.1.1 General Safety Precautions

Please ensure the following safety precautions are adhered to at all times.

- ***Follow the electrostatic precautions*** outlined below whenever the TRN-3200T is opened.
- ***Make sure the power is turned off and the power cord is disconnected*** whenever the TRN-3200T is being installed, moved or modified.
- ***Do not apply voltage levels that exceed the specified voltage range***. Doing so may cause fire and/or an electrical shock.
- ***Electric shocks can occur*** if the TRN-3200T chassis is opened when the TRN-3200T is running.
- ***Do not drop or insert any objects*** into the ventilation openings of the TRN-3200T.
- ***If considerable amounts of dust, water, or fluids enter the TRN-3200T***, turn off the power supply immediately, unplug the power cord, and contact the TRN-3200T vendor.
- **DO NOT** do the following:
  - **DO NOT** drop the TRN-3200T against a hard surface.
  - **DO NOT** strike or exert excessive force onto the LCD panel.
  - **DO NOT** touch any of the LCD panels with a sharp object
  - **DO NOT** use the TRN-3200T in a site where the ambient temperature exceeds the rated temperature

B.1.2 Anti-static Precautions

WARNING:

Failure to take ESD precautions during the installation of the TRN-3200T may result in permanent damage to the TRN-3200T and sever injury to the user.

Electrostatic discharge (ESD) can cause serious damage to electronic components, including the TRN-3200T. Dry climates are especially susceptible to ESD. It is therefore critical that whenever the TRN-3200T is opened and any of the electrical components are handled, the following anti-static precautions are strictly adhered to.

- ***Wear an anti-static wristband***: Wearing a simple anti-static wristband can help to prevent ESD from damaging any electrical component.
- ***Self-grounding***: Before handling any electrical component, touch any grounded conducting material. During the time the electrical component is handled, frequently touch any conducting materials that are connected to the ground.
- ***Use an anti-static pad***: When configuring or working with an electrical component, place it on an anti-static pad. This reduces the possibility of ESD damage.
- ***Only handle the edges of the electrical component***: When handling the electrical component, hold the electrical component by its edges.

B.1.3 Product Disposal

CAUTION:

Risk of explosion if battery is replaced by and incorrect type. Only certified engineers should replace the on-board battery.

Dispose of used batteries according to instructions and local regulations.

- Outside the European Union - If you wish to dispose of used electrical and electronic products outside the European Union, please contact your local authority so as to comply with the correct disposal method.
- Within the European Union:

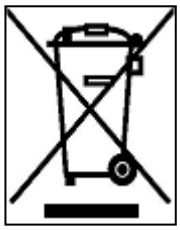

EU-wide legislation, as implemented in each Member State, requires that waste electrical and electronic products carrying the mark (left) must be disposed of separately from normal household waste. This includes monitors and electrical accessories, such as signal cables or power cords. When you need to dispose of your display products, please follow the guidance of your local authority, or ask the shop where you purchased the product. The mark on electrical and electronic products only applies to the current European Union Member States.

Please follow the national guidelines for electrical and electronic product disposal.

B.2 Maintenance and Cleaning Precautions

When maintaining or cleaning the TRN-3200T, please follow the guidelines below.

B.2.1 Maintenance and Cleaning

Prior to cleaning any part or component of the TRN-3200T, please read the details below.

- Except for the LCD panel, never spray or squirt liquids directly onto any other components. To clean the LCD panel, gently wipe it with a piece of soft dry cloth or a slightly moistened cloth.
- The interior does not require cleaning. Keep fluids away from the interior.
- Be careful not to damage the small, removable components inside.
- Turn off before cleaning.
- Never drop any objects or liquids through the openings.
- Be cautious of any possible allergic reactions to solvents or chemicals used when cleaning.
- Avoid eating, drinking and smoking nearby.

B.2.2 Cleaning Tools

Some components may only be cleaned using a product specifically designed for the purpose. In such case, the product will be explicitly mentioned in the cleaning tips. Below is a list of items to use for cleaning.

- ***Cloth*** – Although paper towels or tissues can be used, a soft, clean piece of cloth is recommended.
- ***Water or rubbing alcohol*** – A cloth moistened with water or rubbing alcohol should be used.
- ***Using solvents*** – The use of solvents is not recommended as they may damage the plastic parts.
- ***Vacuum cleaner*** – Using a vacuum specifically designed for computers is one of the best methods of cleaning. Dust and dirt can restrict the airflow and cause circuitry to corrode
- ***Cotton swabs*** - Cotton swaps moistened with rubbing alcohol or water are excellent tools for wiping hard to reach areas.
- ***Foam swabs*** - Whenever possible, it is best to use lint free swabs such as foam swabs for cleaning.

Appendix

C

BIOS Options

Below is a list of BIOS configuration options in the BIOS chapter.

System Date [xx/xx/xx] 21
System Time [xx:xx:xx] 21
ACPI Sleep State [S3 only (Suspend to RAM)] 22
Wake System with Fixed Time [Disabled] 23
Security Device Support [Enable] 24
TPM State [Enabled] 24
Pending operation [None] 25
Platform Hierarchy [Enabled] 25
Storage Hierarchy [Enabled] 25
Endorsement Hierarchy [Enabled] 25
HashPolicy [Sha-1] 25
Device Select [Auto] 26
Hyper-threading [Enabled] 27
Intel Virtualization Technology [Disabled] 27
SATA Controller(s) [Enabled] 28
SATA Mode Selection [AHCI] 28
USB Devices 30
Legacy USB Support [Enabled] 30
USB3.0 Support [Enabled] 31
XHCI Hand-off [Enabled] 31
EHCI Hand-off [Disabled] 31
Port 60/64 Emulation [Enabled] 31
USB hardware delays and time-outs 32
Mass Storage Devices 32
PC Health Status 32
Fan Smart Fan Control1/Fan Smart Fan Control2 [Auto Mode] 33
Auto mode fan start/off temperature 33
Auto mode fan start PWM 33
Auto mode fan slope PWM 34
Auto Recovery Function [Disabled] 34
Azalia [Enabled] 36
Azalia Internal HDMI Codec [Enabled] 36
Internal USB Port (CAM1) Function [Enabled] 37

Micro-SD Function [Enabled] 37
WIFI Radio Function [Enabled] 37
Bluetooth Function [Enabled] 37
Windows Rotation Function [Disabled] 37
VT-d [Disabled] 38
Primary Display [Auto] 39
DVMT Pre-Allocated [256M] 39
DVMT Total Gfx Mem [MAX] 40
Primary IGFX Boot Display [VBIOS Default] 40
Bootup NumLock State [On] 41
Quiet Boot [Enabled] 42
Option ROM Messages [Force BIOS] 42
UEFI Boot [Disabled] 42
Boot Option #1 [PO: 256GB SATA Flas…] 42
Hard Drive BBS Priorities 42
Administrator Password 43
User Password 43
Save Changes and Reset 44
Discard Changes and Reset 44
Restore Defaults 44
Save as User Defaults 44
Restore User Defaults 44

Appendix

D

Hazardous Materials Disclosure

The details provided in this appendix are to ensure that the product is compliant with the Peoples Republic of China (China) RoHS standards. The table below acknowledges the presences of small quantities of certain materials in the product, and is applicable to China RoHS only.

A label will be placed on each product to indicate the estimated "Environmentally Friendly Use Period" (EFUP). This is an estimate of the number of years that these substances would "not leak out or undergo abrupt change." This product may contain replaceable sub-assemblies/components which have a shorter EFUP such as batteries and lamps. These components will be separately marked.

Please refer to below table.

Part Name	Toxic or Hazardous Substances and Elements					
	Lead (Pb)	Mercury (Hg)	Cadmium (Cd)	Hexavalent Chromium (CR(VI))	Polybrominated Biphenyls (PBB)	Polybrominated Diphenyl Ethers (PBDE)
Housing	O	O	O	O	O	O
Display	O	O	O	O	O	O
Printed Circuit Board	O	O	O	O	O	O
Metal Fasteners	O	O	O	O	O	O
Cable Assembly	O	O	O	O	O	O
Fan Assembly	O	O	O	O	O	O
Power Supply Assemblies	O	O	O	O	O	O
Battery	O	O	O	O	O	O

O: This toxic or hazardous substance is contained in all of the homogeneous materials for the part is below the limit requirement in SJ/T11363-2006 (now replaced by GB/T 26572-2011).

X: This toxic or hazardous substance is contained in at least one of the homogeneous materials for this part is above the limit requirement in SJ/T11363-2006 (now replaced by GB/T 26572-2011).

此附件旨在确保本产品符合中国 RoHS 标准。以下表格标示此产品中某有毒物质的含量符合中国 RoHS 标准规定的限量要求。

本产品上会附有"环境友好使用期限"的标签，此期限是估算这些物质"不会有泄漏或突变"的年限。本产品可能包含有较短的环境友好使用期限的可替换元件，像是电池或灯管，这些元件将会单独标示出来。

部件名称	有毒有害物质或元素					
	铅 (Pb)	汞 (Hg)	镉 (Cd)	六价铬 (CR(VI))	多溴联苯 (PBB)	多溴二苯醚 (PBDE)
壳体	O	O	O	O	O	O
显示	O	O	O	O	O	O
印刷电路板	O	O	O	O	O	O
金属螺帽	O	O	O	O	O	O
电缆组装	O	O	O	O	O	O
风扇组装	O	O	O	O	O	O
电力供应组装	O	O	O	O	O	O
电池	O	O	O	O	O	O

O: 表示该有毒有害物质在该部件所有物质材料中的含量均在 SJ/T11363-2006 (现由 GB/T 26572-2011 取代) 标准规定的限量要求以下。

X: 表示该有毒有害物质至少在该部件的某一均质材料中的含量超出 SJ/T11363-2006 (现由 GB/T 26572-2011 取代) 标准规定的限量要求。