HOME
DECORATORS
COLLECTION

Item #1001 xxx xxx
Model # 51549, 51543
UL Model # 44-CRD

USE AND CARE GUIDE

CORRADO 44-INCH CEILING FAN

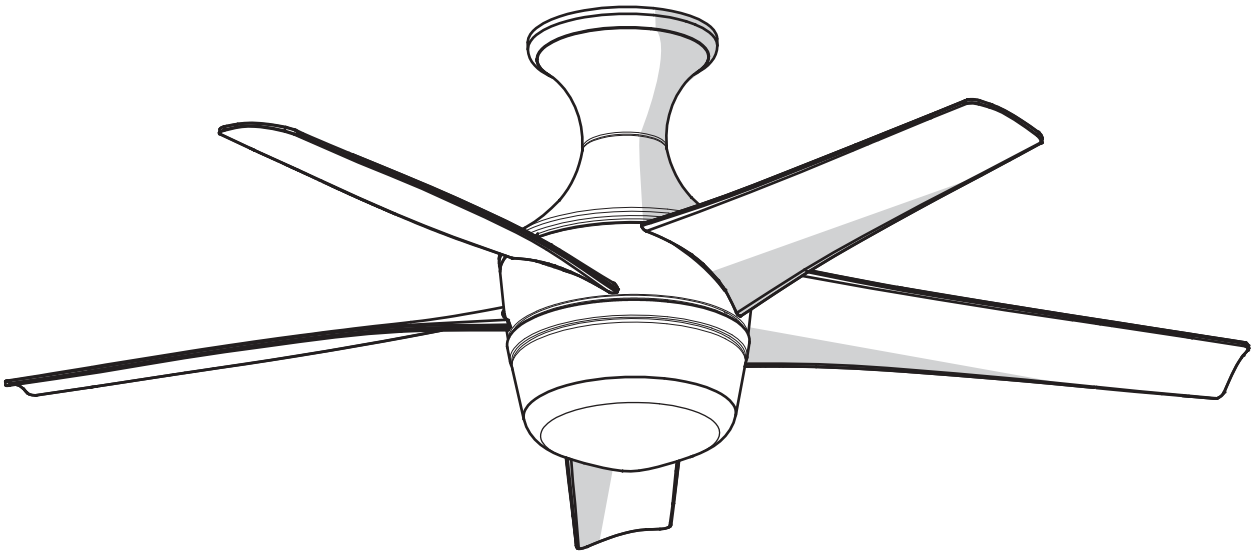

Questions, problems, missing parts? Before returning to the store,
call Home Decorators Collection Customer Service
8 a.m. - 7 p.m., EST, Monday-Friday, 9 a.m. - 6 p.m., EST, Saturday.

1-800-986-3460

HOMEDEPOT.COM/HOMEDECORATORS

THANK YOU

We appreciate the trust and confidence you have placed in Home Decorators Collection through the purchase of this ceiling fan. We strive to continually create quality products designed to enhance your home. Visit us online to see our full line of products available for your home improvement needs. Thank you for choosing Home Decorators Collection!

Table of Contents

Table of Contents 2
Safety Information 2
Warranty 3
Pre-Installation 3
Installation 6
Assembly 7
Operation 12
Care and Cleaning 14
Troubleshooting 14

Safety Information

READ AND SAVE THESE INSTRUCTIONS.

1. To reduce the risk of electric shock, ensure the electricity has been turned off at the circuit breaker or fuse box before you begin.
2. All wiring must be in accordance with the National Electrical Code ANSI/NFPA 70 and local electrical codes. Electrical installation should be performed by a qualified licensed electrician.
3. The outlet box and support structure must be securely mounted and capable of reliably supporting a minimum of 35 lbs. (15.9 kg). Use only UL-listed outlet boxes marked “Acceptable for Fan Support of 35 lbs. (15.9 kg) or less.”
4. The fan must be mounted with a minimum of 7 ft (2.1 m) of clearance from the trailing edge of the blades to the floor.
5. Do not place objects in the path of the blades.
6. To avoid personal injury or damage to the fan and other items, use caution when working around or cleaning the fan.
7. After making electrical connections, spliced conductors should be turned upward and pushed carefully up into the outlet box. The wires should be spread apart with the grounded conductor and the equipment-grounding conductor on one side of the outlet box.
8. All set screws must be checked and retightened where necessary before installation.

CAUTION: Changes or modifications not expressly approved by the party responsible for compliance could void the user’s authority to operate the equipment.

This equipment has been tested and found to comply with the limits for a Class B digital device, pursuant to Part 15 of the FCC rules. These limits are designed to provide reasonable protection against harmful interference in a residential installation. This equipment generates, uses and can radiate radio frequency energy and if not installed and used in accordance with the instructions, may cause harmful interference to radio communications. However, there is no guarantee that interference will not occur in a particular installation. If this equipment does cause harmful interference to radio or television reception, which can be determined by turning the equipment off and on, the user is encouraged to try correct the interference by one or more of the following measures:
- Reorient the receiving antenna.
- Increase the separation between the equipment and receiver.
- Connect the equipment into and outlet on a circuit different from that to which the receiver is connected.
- Consult the dealer or an experienced radio/TV technician for help.

WARNING: To reduce the risk of personal injury, do not bend the blade brackets (also referred to as flanges) during assembly or after installation. Do not insert objects in the path of the blades.

WARNING: To reduce the risk of fire or electric shock, do not use this fan with any solid-state speed control device.

WARNING: To avoid possible electrical shock, turn the electricity off at the main fuse box before wiring. If you feel you do not have enough electrical wiring knowledge or experience, contact a licensed electrician.

WARNING: To reduce the risk of fire, electric shock or personal injury, mount to outlet box marked “Acceptable for fan support of 35 lbs. (15.9 kg) or less”, and use screws provided with the outlet box.

WARNING: Electrical diagrams are for reference only. If you are using a light kit, refer to the light kit instructions manual to make the electrical connections. Optional use of any light kit shall be UL-listed and marked suitable for use with this fan.

WARNING: To reduce the risk of fire or electric shock, this fan should only be used with fan speed control part no. MR140A, manufactured by Satellite Electronic Co., LTD.

WARNING: To reduce the risk of electric shock, this fan must be installed with an isolating wall switch.

CAUTION: To reduce the risk of personal injury, use only the screws provided with the outlet box.

CAUTION: Do NOT use this fan with a dimmer switch or wall control. Using a dimmer switch or wall control will damage the fan.

This device complies with part 15 of the FCC rules, operation is subject to the following two conditions. (1) this device may not cause harmful interference and (2) this device must accept any interference received, including interference that may cause undesired operation.

Warranty

The supplier warrants the fan motor to be free from defects in workmanship and material present at time of shipment from the factory for a lifetime after the date of purchase by the original purchaser. The supplier also warrants that all other fan parts, excluding any glass or acrylic blades, to be free from defects in workmanship and material at the time of shipment from the factory for a period of two years after the date of purchase by the original purchaser. We agree to correct such defects without charge or at our option replace with a comparable or superior model if the product is returned. To obtain warranty service, you must present a copy of the receipt as proof of purchase. All costs of removing and reinstalling the product are your responsibility. Damage to any part such as by accident or misuse or improper installation or by affixing any accessories, is not covered by this warranty. Because of varying climatic conditions this warranty does not cover any changes in brass finish, including rusting, pitting, corroding, tarnishing, or peeling. Brass finishes of this type give their longest useful life when protected from varying weather conditions. A certain amount of “wobble” is normal and should not be considered a defect. Servicing performed by unauthorized persons shall render the warranty invalid. There is no other express warranty. Home Decorators Collection hereby disclaims any and all warranties, including but not limited to those of merchantability and fitness for a particular purpose to the extent permitted by law. The duration of any implied warranty which cannot be disclaimed is limited to the time period as specified in the express warranty. Some states do not allow a limitation on how long an implied warranty lasts, so the above limitation may not apply to you. The retailer shall not be liable for incidental, consequential, or special damages arising out of or in connection with product use or performance except as may otherwise be accorded by law. Some states do not allow the exclusion of incidental or consequential damages, so the above exclusion or limitation may not apply to you. This warranty gives specific legal rights, and you may also have other rights which vary from state to state. This warranty supersedes all prior warranties. Shipping costs for any return of product as part of a claim on the warranty must be paid by the customer.

Contact the Customer Service Team at 1-800-986-3460 or visit www.HomeDepot.com/homedecorators.

Pre-Installation

SPECIFICATIONS

Size	Speed	Volts	Fan Power Consumption (without lights) WATT	Airflow CFM	Airflow Efficiency (Higher Is Better) CFM/WATT	Net Weight	Gross Weight	Cubic Feet
44 in.	1	120	x	xxxx	xxxx	xx lbs (x kgs)	xx lbs (x kgs)	xx pies³ (x m³)
	2		x	xxxx	xxxx			
	3		x	xxxx	xxxx			
	4		x	xxxx	xxxx			

NOTE: These are approximate measures. They do not include the Amps and Wattage used by the light kit.

UL® LISTED

TOOLS REQUIRED

Phillips screwdriver

Flat blade screwdriver

Adjustable wrench

Electrical tape

Wire cutter / Stripper

Step ladder

HARDWARE INCLUDED

NOTE: Hardware not shown to actual size.

AA

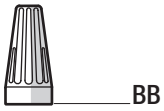
BB

Part	Description	Quantity
AA	Blade attachment screws	16
BB	Plastic wire connecting nut	3

PACKAGE CONTENTS

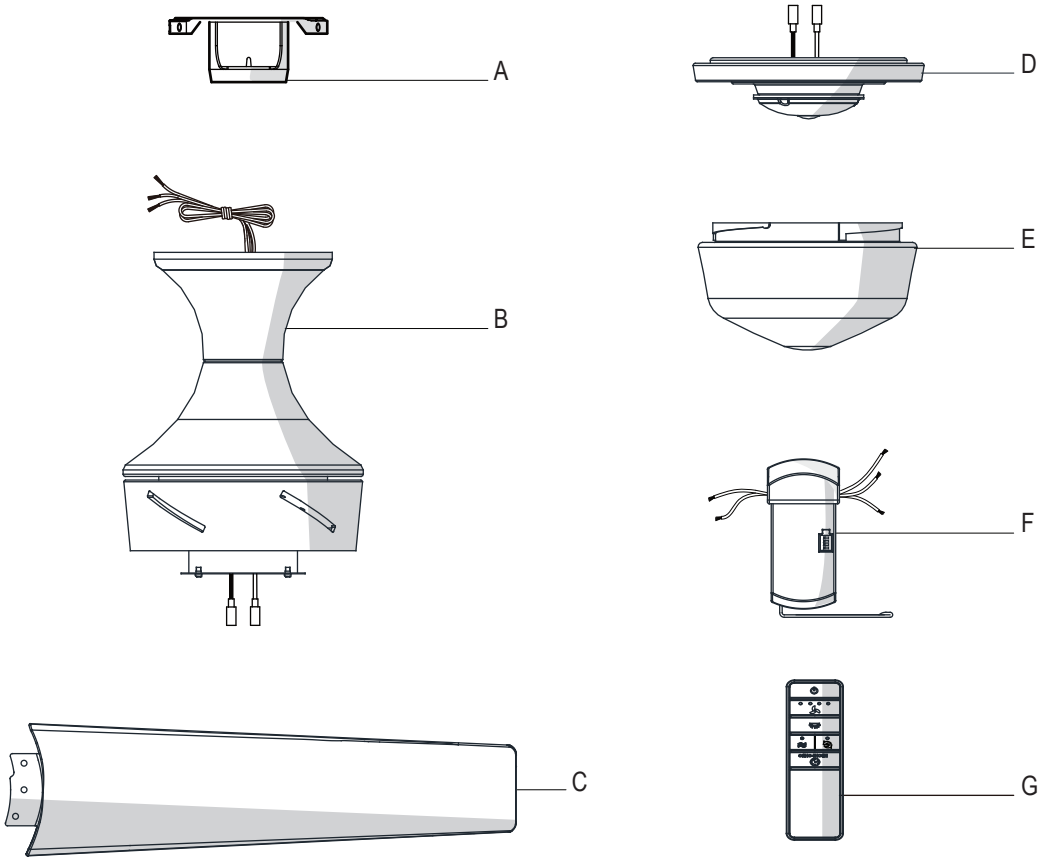

Part	Description	Quantity
A	Slide-on mounting bracket (inside canopy)	1
B	Fan-motor assembly	1
C	Blade	5
D	Light kit fitter assembly (LED included)	1

Part	Description	Quantity
E	Glass bowl	1
F	Receiver	1
G	Transmitter (battery included)	1

IMPORTANT: This product and/or components are governed by one or more of the following U.S. Patents: 5,947,436; 5,988,580; 6,010,110; 6,046,416, 6,210,117 and other patents pending.

MOUNTING OPTIONS

WARNING: To reduce the risk of fire, electric shock or personal injury, mount to outlet box marked "Acceptable for fan support of 35 lbs. (15.9 Kg) or less", and use screws provided with the outlet box. An outlet box commonly used for the support of lighting fixtures may not be acceptable for fan support and may need to be replaced. If in doubt, consult a qualified electrician.

If your ceiling fan does not have an existing UL-listed mounting box, then install one using the following instructions:

- ☐ Disconnect the power by removing the fuses or turning off the circuit breakers.
- ☐ Secure the outlet box directly to the building structure. Use the appropriate fasteners and materials. The outlet box and support structure must be securely mounted and capable of reliably supporting a minimum of 35 lbs. (15.9kg). Use only UL-listed outlet boxes marked "Acceptable for fan support of 35 lbs. (15.9 Kg) or less" Do not use a plastic outlet box.

The illustrations below show three different ways to mount the outlet box.

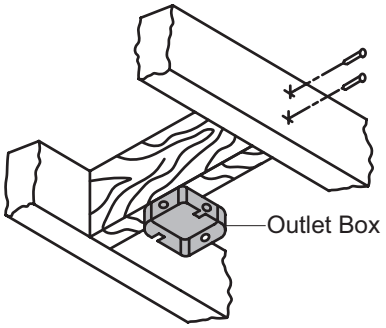

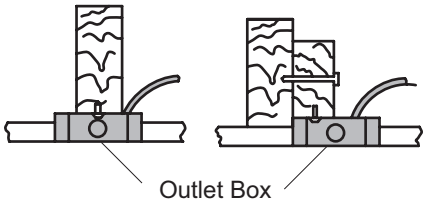

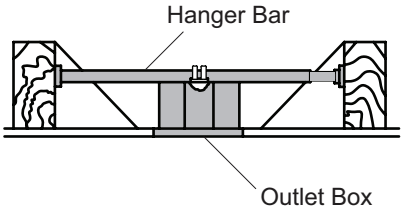

NOTE: To hang your fan where there is an existing fixture but no ceiling joist, you may need an installation hanger bar as shown above (available at any Home Depot store).

Assembly - Standard Ceiling Mount

1 Preparing for mounting

- ☐ Remove the canopy ring (EE) from the fan motor assembly (B) by turning the ring counterclockwise until it unlocks.
- ☐ Remove the mounting bracket (A) from the fan motor assembly (B) by loosening the two canopy screws (CC) located in the “L shaped” slots.
- ☐ Remove and save the two canopy screws (DD) in the round holes. This will enable you to remove the mounting bracket (A).

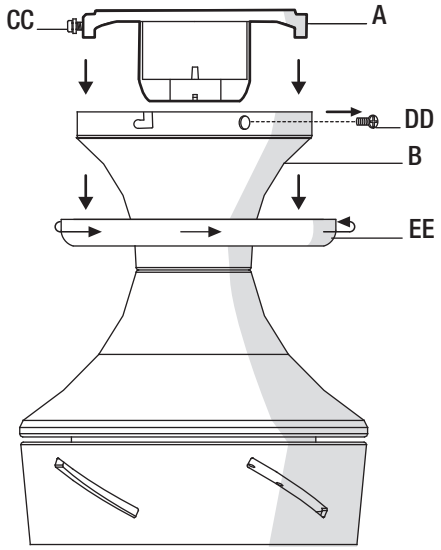

Assembly - Hanging the Fan

1 Attaching the fan to the electrical box

WARNING: To reduce the risk of fire, electric shock or personal injury, mount to outlet box marked “Acceptable for fan support of 35 lbs. 15.9 kg) or less”, and use screws provided with the outlet box.

NOTE: The mounting bracket (A) is designed to slide into place on an outlet box with the outlet box screws (II) installed.

- ☐ Loosen the two mounting screws (II) in the outlet box.
- ☐ Pass the 120-Volt supply wires through the center hole in the mounting bracket (A).
- ☐ Slide the mounting bracket (A) on to the mounting screws (II) and center the mounting bracket (A) in relation to the outlet box. If necessary, use leveling washers (not included) between the slide-on mounting bracket (A) and the outlet box. The flat side of the slide-on mounting bracket (A) should face toward the outlet box, as shown.
- ☐ Securely tighten the two mounting screws (II).

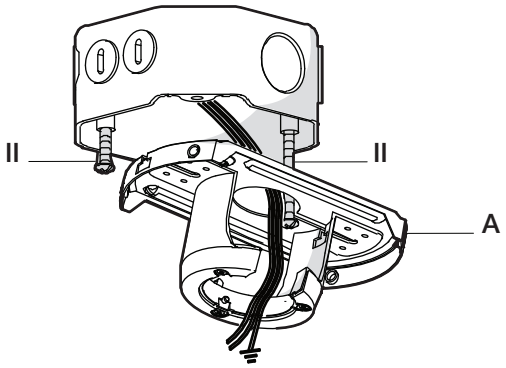

2 Hanging the fan

WARNING: The hook (FF) is only to balance the fan while making the electrical connections. Failure to hang as shown may result in the hook (FF) breaking, causing the fan to fall. The hook must pass from the inside to the outside of the canopy.

WARNING: When hanging the fan on the hook (FF) it is critical that you use one of the non-slotted (round) holes in the fan-motor assembly (B).

- ☐ Carefully lift the fan-motor assembly (B) up to the slide-on mounting bracket (A).
- ☐ Hang the fan on the hook (FF) provided by utilizing one of the non-slotted (round) holes at the outer rim of the fan-motor assembly (B).

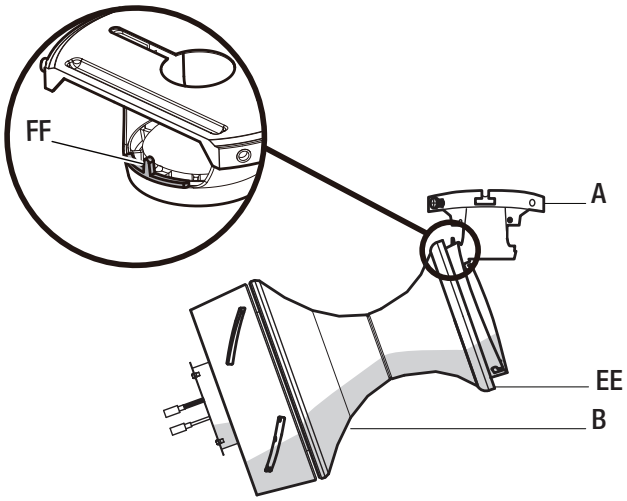

3 Setting the code on the remote control and receiver

NOTE: The frequencies on your receiver and hand unit have been preset at the factory. Before installing the receiver, make sure the dip switches on the receiver and hand unit are set to the same frequency. The dip switches on the hand unit are located inside the battery compartment.

NOTE: The switch marked O/D controls the dimming function of the light. Use a ballpoint pen or small screwdriver to switch to O to disable the dimming function. The factory preset is D.

NOTE: The battery will weaken with age and should be replaced before leaking takes place as this will damage the hand unit. Dispose of used battery properly and keep the battery out of the reach of children.

- ☐ Remove the remote control (G) battery cover by pressing firmly on the arrow and sliding the cover off.
- ☐ Slide the dip switches to your choice of either up or down. The factory setting is up.
- ☐ Slide the dip switches (ZZ) on the receiver (F) to the same position as set on the remote control (G).
- ☐ Install two 1.5V AAA batteries (included).
- ☐ Replace the battery cover on the remote control (G).
- ☐ Insert the silicone rubber stopper (OO) into the hole on the receiver (F) to cover the dip switches.

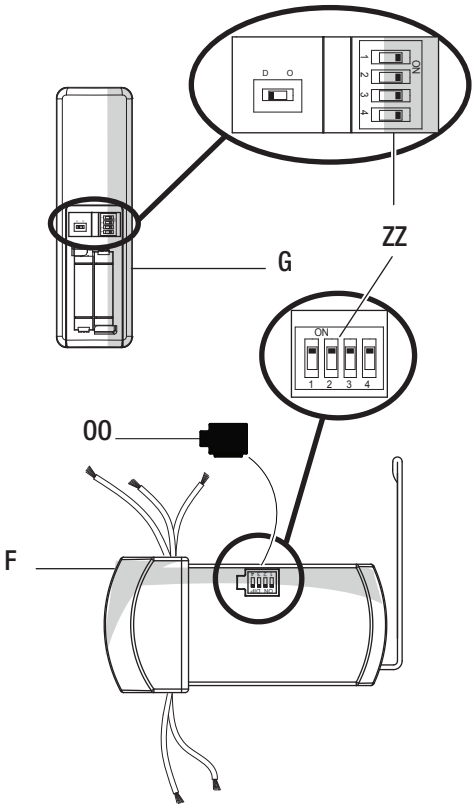

4 Installing the receiver

WARNING: To reduce the risk of fire or electric shock, remember to disconnect power. The electrical wiring must meet all local and national electrical code requirements. The electrical source and fan must be 110/120 volt, 60Hz. Do not use this product in conjunction with any variable wall control. Incorrect wire connection can damage this receiver.

CAUTION: If other fan wires are a different color, have this unit installed by a licensed electrician.

CAUTION: Do not install the receiver in a damp location or immerse in water (For indoor use only). Do not pull on or cut the receiver leads shorter. Do not drop or bump the unit.

- ☐ Position the house supply wires (AAA) to one side of the slide-on mounting bracket (A); position the fan wires (BBB) to the opposite side.
- ☐ Insert the narrow end of the receiver (as shown, flat side towards the ceiling) into the slide-on mounting bracket until it rests on top of the ball/downrod assembly.

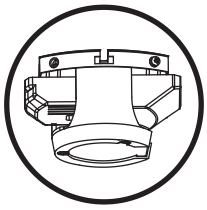

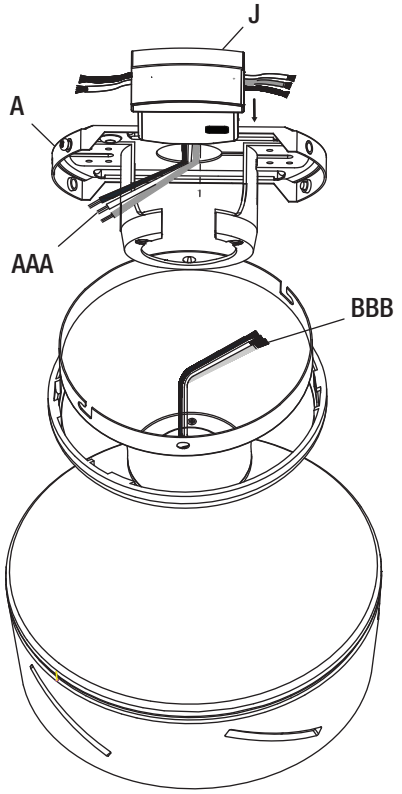

5 Wiring the receiver to the household wiring

WARNING: To avoid possible electrical shock, turn the electricity off at the main fuse box before wiring. If you feel you do not have enough electrical wiring knowledge or experience, contact a licensed electrician.

WARNING: Each wire not supplied with this fan is designed to accept up to one 12-gauge house wire and two wires from the fan. If you have larger than 12-gauge house wiring or more than one house wire to connect to the fan wiring, consult an electrician for the proper size wire nuts to use.

IMPORTANT: Use the wire connecting nuts (BB) supplied with your fan. Secure the connectors with electrical tape and ensure there are no loose strands or connections.

- ☐ Spread the wires apart so that the green and white wires are on one side of the outlet box and the black wire is on the other side.
- ☐ Connect the green fan wires to the household ground wire (this may be a green or bare wire) using a wire connecting nut (BB).
- ☐ Connect the receiver black (or red) wire to the household black (hot) wire using a wire connecting nut (BB).
- ☐ Connect the receiver (F) white wire to the household white wire (neutral) wire using a wire connecting nut (BB).
- ☐ Secure each wire connecting nut using electrical tape.

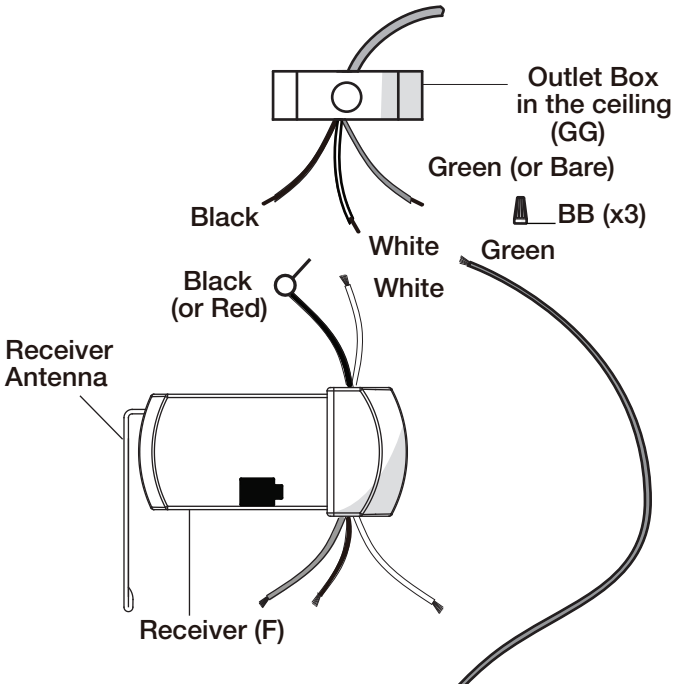

6 Making the electrical connection

WARNING: Each wire not supplied with this fan is designed to accept up to one 12-gauge house wire and two wires from the fan. If you have larger than 12-gauge house wiring or more than one house wire to connect to the fan wiring, consult an electrician for the proper size wire nuts to use.

IMPORTANT: Use the plastic wire connectors (BB) supplied with your fan. Secure the connectors with electrical tape and ensure there are no loose strands or connections.

- ☐ Connect the fan motor green wires to the household green or bare wire using a wire connecting nut (BB).
- ☐ Connect the fan motor white wires to the household white wire using a wire connecting nut (BB).
- ☐ Connect the fan motor black wires to the household black wire using a wire connecting nut (BB).
- ☐ Secure each wire connecting nut using electrical tape.
- ☐ Turn the wire connecting nut (BB) upward and push the wiring into the outlet box (GG).

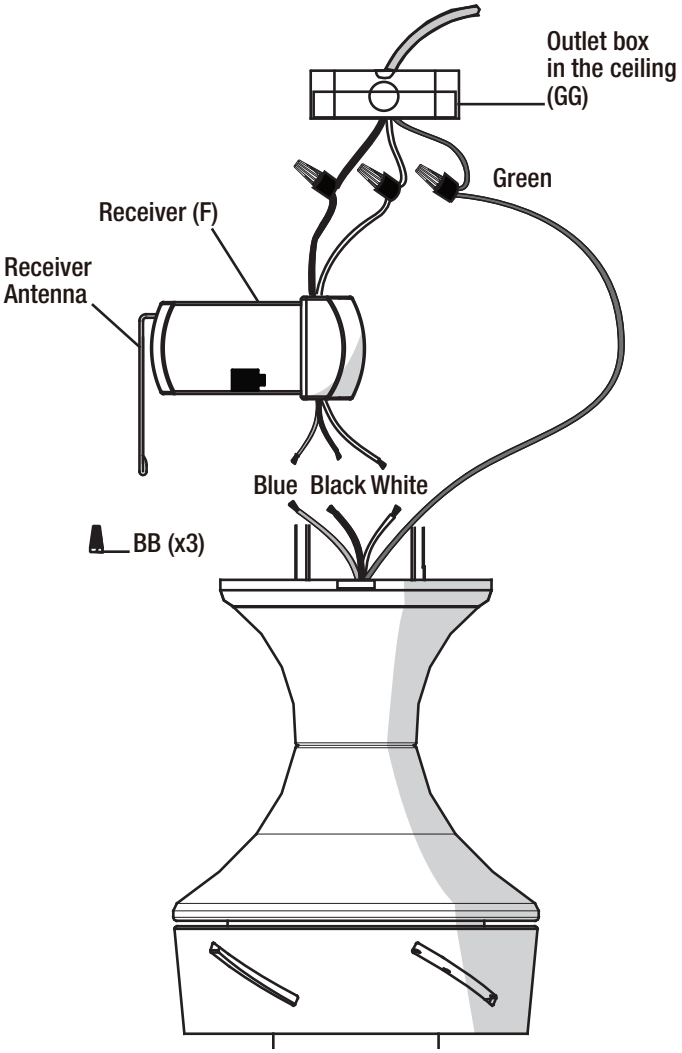

7 Mounting the fan-motor assembly

WARNING: The locking slots of ceiling canopy are provided only as an aid to mounting. Do not leave the fan assembly unattended until all four canopy screws are engaged and firmly tightened.

- ☐ Align the locking slots of the fan-motor assembly (B) with the two screws (CC) in the slide-on mounting bracket (A). Push up to engage the slots, and turn clockwise to lock the fan-motor assembly (B) in place.
- ☐ Firmly tighten the two mounting screws (CC).
- ☐ Install the two mounting screws (saved from Assembly Step 1 “Preparing for mounting”) into the holes in the fan-motor assembly (B) and tighten firmly.
- ☐ Install the decorative canopy ring (EE) by aligning the ring’s slots with the screws in the fan-motor assembly (B). Rotate the canopy ring (EE) counterclockwise to lock it in place.

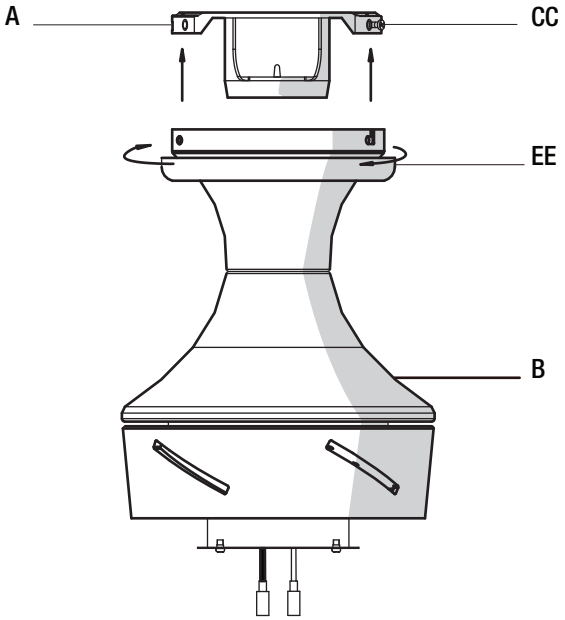

8 Attaching the fan blades

- ☐ Attach a blade (C) to the fan-motor housing (B) by inserting the blade (C) into slots in the side of the fan motor housing (B) and aligning the three screw holes in the blade with the holes in the center flywheel and secure with screws (AA).
- ☐ Make sure all the screws are firmly tightened.

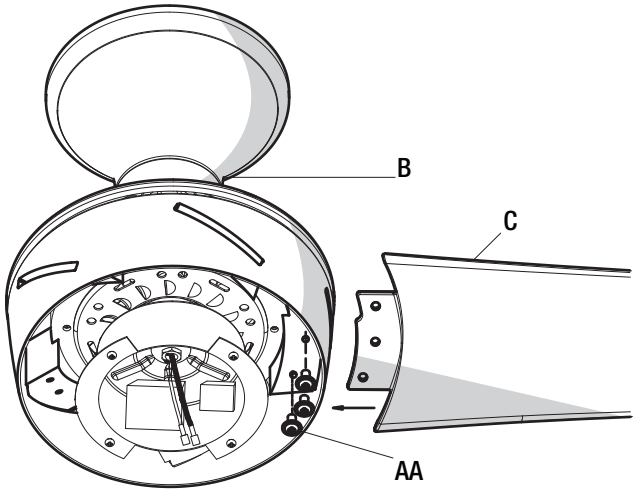

9 Attaching the light kit fitter assembly

- ☐ Attach the light kit fitter assembly (D), remove the one screw (HH) in the round hole, from the switch cup (JJ), and loosen, but do not remove the other three screws.
- ☐ Connect the blue wire exiting the bottom of the fan motor assembly (B) with the black wire from the top of the light kit fitter assembly (D).
- ☐ Connect the white wire exiting the bottom of the fan motor assembly (B) with the white wire from the top of the light kit fitter assembly (D).
- ☐ Push the light kit fitter assembly (D) up to the light kit pan so that the three loosened screw heads fit into the keyhole slots. Turn the light kit fitter assembly (D) clockwise to secure.
- ☐ Re-install the screw (HH) that was removed in step 1.
- ☐ Make sure all the screws are firmly tightened.

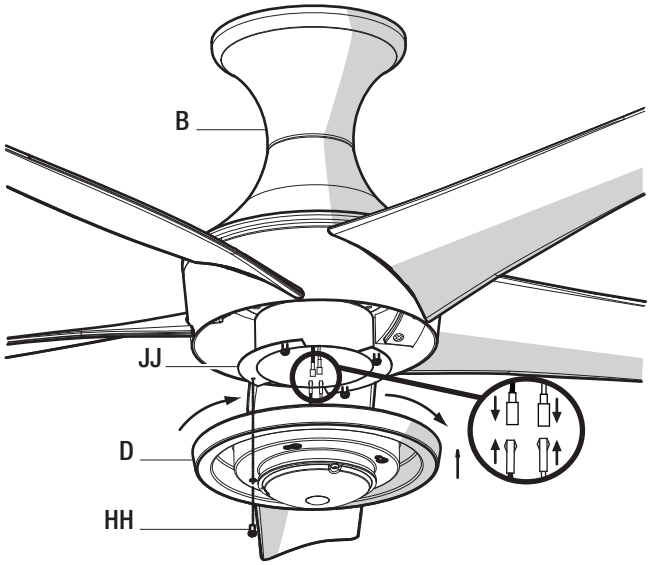

Assembly - Hanging the Fan (continued)

10 Installing the glass bowl

WARNING: To reduce the risk of injury, allow the glass to cool completely before removing.

- ☐ Place the bowl (E) into the light kit fitter assembly (D), by aligning the three flat areas on the top flange of the bowl (E) with the three raised dimples in the light kit fitter assembly (D).
- ☐ Turn the shade clockwise until it stops.

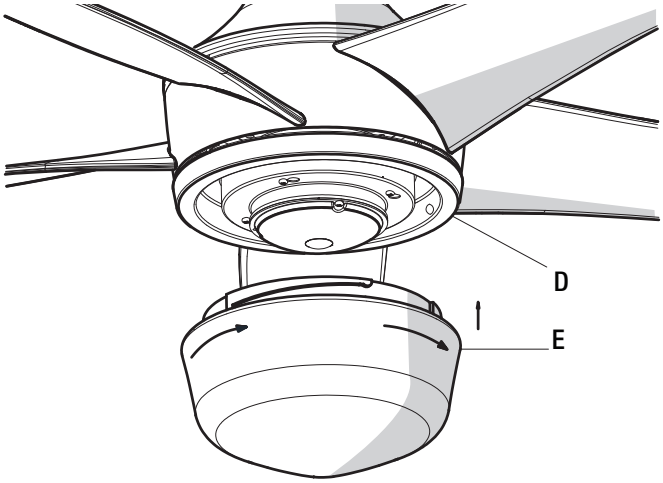

Operating Your Fan and Remote Control

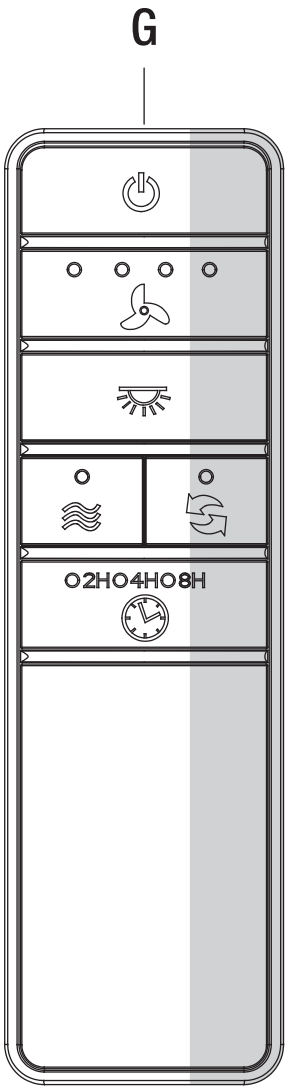

1. **Power ON/OFF.** - Press and release the button to turn the fan on or off.

☐ Press and hold the button for 5 seconds to use the "walk away time delay"; this will active the light for 30 seconds (the light will be activated at 50% brightness).

2. **Fan Speed -** LEDs on the fan speed button will illuminate to the corresponding speed.

- Press and release 1 time - turns the fan on low speed.
- Press and release 2 times - turns the fan on medium-low speed.
- Press and release 3 times - turns the fan on medium-high speed.
- Press and release 4 times - turns the fan on high speed.
- Press and release 5 times - turns the fan off.

3. **Light ON/OFF**

☐ Press and release the button to turn the light on or off.

☐ Press and hold the button to activate the dimmer function (as long as you have NOT previously set O/D dip switch in your remote to the "ON" position).

4. **Comfort Breeze™**

☐ Press and hold this button for 3 seconds to enable Comfort Breeze™; this will change your fan speed randomly, simulating a relaxing breeze. To cancel this feature press or .

5. **Fan reverse button** (Must be pushed when the fan is in operation)

☐ Press and release the button to forward and reverse the fan.

6. **Timer**

- While the fan is on press 1 time - turns on a 2 hour run timer.
- While the fan is on press 2 times - turns on a 4 hour run timer.
- While the fan is on press 3 times - turns on an 8 hour run timer.

Operating Your Fan and Remote Control (continued)

Remote Control - Your fan is equipped with a remote control to operate the speed and lights of your new ceiling fan.

Speed setting for warm or cool weather depend on factors such as the room size, ceiling height, number of fans and so on.

A. Warm weather - (Forward) A downward airflow creates a cooling effect.
This allows you to set your air conditioner on a higher setting without affecting your comfort.

B. Cool weather - (Reverse) An upward airflow moves warm air off of the ceiling. This allows you to set your heating unit on a lower setting without affecting your comfort.

NOTE: Do not wait for the fan to stop before pressing the reverse button. The fan will not reverse direction if the fan is not moving.

A. Warm weather

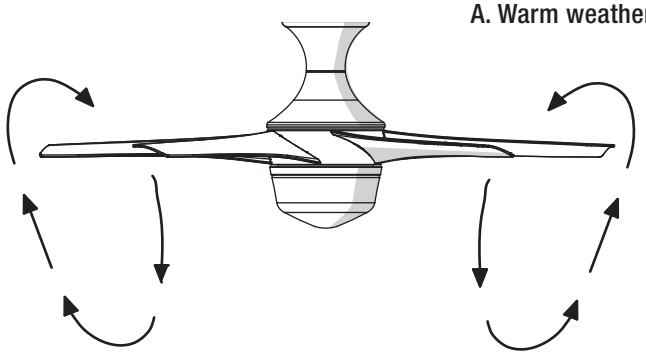

B. Cool weather

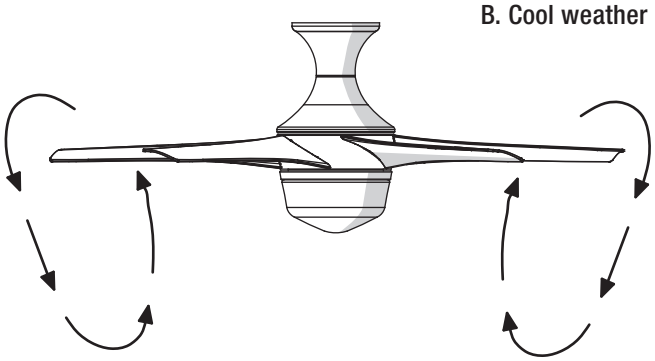

Care and Cleaning

WARNING: Make sure the power is off before cleaning your fan.

- Because of the fan's natural movement, some connections may become loose. Check the support connections, brackets, and blade attachments twice a year. Make sure they are secure. It is not necessary to remove the fan from the ceiling.
- Clean your fan periodically to help maintain its new appearance over the years. Do not use water when cleaning, as this could damage the motor, or the wood, or possibly cause an electrical shock. Use only a soft brush or lint-free cloth to avoid scratching the finish.
- You can apply a light coat of furniture polish to the wood for additional protection and enhanced beauty. Cover small scratches with a light application of shoe polish.
- You do not need to oil your fan. The motor has permanently-lubricated sealed ball bearings.

Troubleshooting

Problem	Solution
The fan will not start.	□ Check the main and branch circuit fuses or breakers. □ Check the line wire connections to the fan and switch wire connections in the switch housing. □ Check the battery in the remote control. □ Ensure you are in the normal range of 10-20 feet. □ Remember to turn off the power supply before checking the dip switch settings.
The fan is noisy.	□ Ensure all motor housing screws are snug. □ Ensure the screws that attach the fan blade bracket to the motor hub are tight. □ Ensure the wire nut connections are not rattling against each other or the interior wall of the switch housing. □ Allow a 24-hour "breaking in" period. Most noises associated with a new fan disappear during this time. □ If you are using the Ceiling Fan light kit, ensure the screws securing the glassware are tight. Check that the light bulbs are also secure. □ Ensure the canopy is a short distance from the ceiling. It should not touch the ceiling. □ Ensure your outlet box is secure and rubber isolator pads were used between the mounting plate and outlet box.
The fan wobbles.	□ Check that all blade and blade arm screws are secure. □ Most fan wobble problems are caused when blade levels are unequal. Check this level by selecting a point on the ceiling above the tip of one of the blades. Measure from a point on the center of the blade to the point on the ceiling. Rotate the fan until the next blade is positioned for measurement, and measure from the same point on each blade to the ceiling. Repeat for each blade. Any measurement deviation should be within 1/8 in. Run the fan for ten minutes. If the fan continues to wobble please contact Customer Service and a balancing kit will be sent to you at no charge.

HOME
DECORATORS
COLLECTION

Questions, problems, missing parts? Before returning to the store,
call Home Depot Customer Service
8 a.m. - 7 p.m., EST, Monday-Friday, 9 a.m. - 6 p.m., EST, Saturday.

1-800-986-3460

HOMEDEPOT.COM/HOMEDECORATORS

Retain this manual for future use.