Item #1002 707 963, 1002 707 962
Model #91010, 91013
UL Model #52-SKV

USE AND CARE GUIDE

FLOWE 52 IN. CEILING FAN

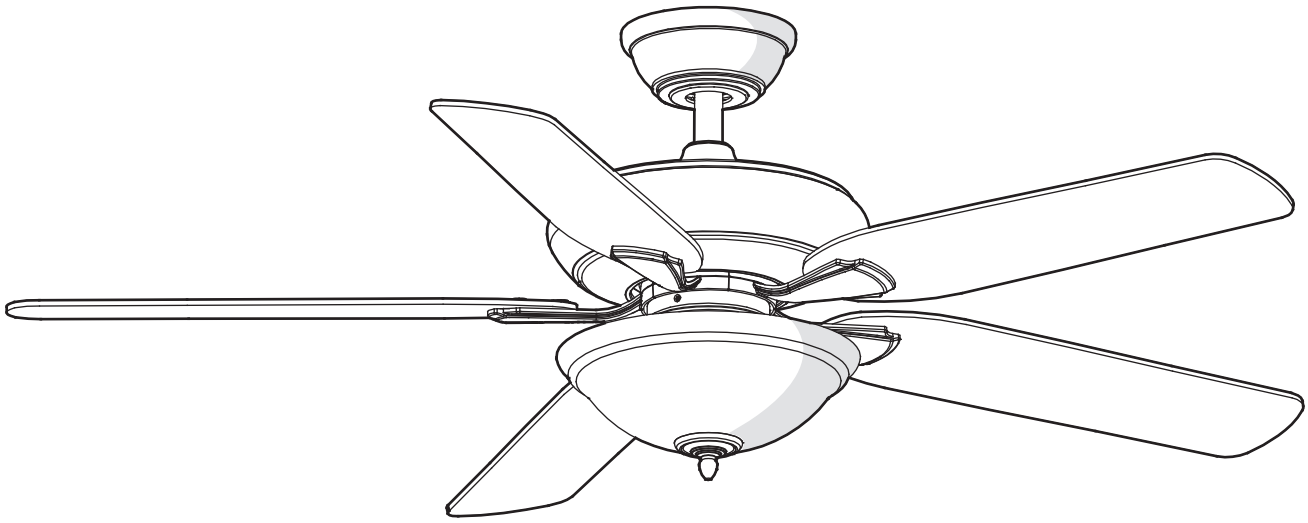

Questions, problems, missing parts? Before returning to the store call
Hampton Bay Customer Service
8 a.m. - 6 p.m., EST, Monday-Friday

1-855-HD-HAMPTON

HAMPTONBAY.COM

To view an instructional video on how to install this product:

1. **Go to www.homedepot.com and enter either the Item or Model number, found in the top right corner of the cover of this instruction manual, in the search field.**
2. **Click on your product from the list of search results and click on the video link in the "Product Overview" section.**

THANK YOU

We appreciate the trust and confidence you have placed in Hampton Bay through the purchase of this ceiling fan. We strive to continually create quality products designed to enhance your home. Visit us online to see our full line of products available for your home improvement needs. Thank you for choosing Hampton Bay!

Table of Contents

Table of Contents 2

Safety Information 2

Warranty 3

Pre-Installation 3

Installation 6

Assembly 7

Operation 17

Care and Cleaning 18

Troubleshooting 18

Safety Information

1. To reduce the risk of electric shock, ensure the electricity has been turned off at the circuit breaker or fuse box before you begin.
2. All wiring must be in accordance with the National Electrical Code ANSI/NFPA 70-1999 and local electrical codes. Electrical installation should be performed by a qualified licensed electrician.
3. The outlet box and support structure must be securely mounted and capable of reliably supporting 35 lbs. (15.9 kg). Use only UL Listed outlet boxes marked “Acceptable for Fan Support of 35 lbs. (15.9 kg) or less.”
4. The fan must be mounted with a minimum of 7 ft (2.1 m) clearance from the trailing edge of the blades to the floor.
5. Do not operate the reversing switch while the fan blades are in motion. You must turn the fan off and stop the blades before you reverse the blade direction.
6. Do not place objects in the path of the blades.
7. To avoid personal injury or damage to the fan and other items, use caution when working around or cleaning the fan.
8. Electrical diagrams are for reference only. Light kits that are not packed with the fan must be UL-listed and marked suitable for use with the model fan you are installing. Switches must be UL General Use Switches. Refer to the instructions packaged with the light kits and switches for proper assembly.
9. After making electrical connections, spliced conductors should be turned upward and pushed carefully up into the outlet box. The wires should be spread apart with the grounded conductor and the equipment-grounding conductor on one side of the outlet box.
10. All setscrews must be checked and retightened where necessary before installation.

WARNING: To reduce the risk of personal injury, do not bend the blade brackets (also referred to as flanges) during assembly or after installation. Do not insert objects in the path of the blades.

WARNING: Remove the rubber motor stops on the bottom of the fan before installing the blades or testing the motor.

WARNING: To reduce the risk of fire or electric shock, do not use this fan with any solid-state speed control device.

WARNING: To reduce the risk of fire, electric shock or personal injury, mount to outlet box marked “Acceptable for fan support of 35 lbs. (15.9 Kg) or less,” and use screws provided with the outlet box.

WARNING: To avoid possible electrical shock, turn the electricity off at the main fuse box before wiring. If you feel you do not have enough electrical wiring knowledge or experience, contact a licensed electrician.

WARNING: Electrical diagrams are for reference only. Optional use of any light kit shall be UL-listed and marked suitable for use with this fan.

WARNING: To reduce the risk of fire or electric shock, this fan should only be used with fan speed control part no. UC7067RYA, manufactured by Rhine Electronic Co.,LTD or control part no. FAN28R-240W, manufactured by Chia Wei Electric Co.,LTD.

CAUTION: Changes or modifications not expressly approved by the party responsible for compliance could void the user’s authority to operate the equipment.

Warranty

The supplier warrants the fan motor to be free from defects in workmanship and material present at time of shipment from the factory for a lifetime after the date of purchase by the original purchaser. The supplier also warrants that all other fan parts, excluding any glass or acrylic blades, to be free from defects in workmanship and material at the time of shipment from the factory for a period of one year after the date of purchase by the original purchaser. We agree to correct such defects without charge or at our option replace with a comparable or superior model if the product is returned. To obtain warranty service, you must present a copy of the receipt as proof of purchase. All costs of removing and reinstalling the product are your responsibility. Damage to any part, such as by accident, misuse, improper installation, or by affixing any accessories, is not covered by this warranty. Because of varying climatic conditions this warranty does not cover any changes in brass finish, including rusting, pitting, corroding, tarnishing, or peeling. Brass finishes of this type give their longest useful life when protected from varying weather conditions. A certain amount of “wobble” is normal and should not be considered a defect. Servicing performed by unauthorized persons shall render the warranty invalid. There is no other express warranty. Hampton Bay hereby disclaims any and all warranties, including but not limited to those of merchantability and fitness for a particular purpose to the extent permitted by law. The duration of any implied warranty which cannot be disclaimed is limited to the time period as specified in the express warranty. Some states do not allow a limitation on how long an implied warranty lasts, so the above limitation may not apply to you. The retailer shall not be liable for incidental, consequential, or special damages arising out of or in connection with product use or performance except as may otherwise be accorded by law. Some states do not allow the exclusion of incidental or consequential damages, so the above exclusion or limitation may not apply to you. This warranty gives specific legal rights, and you may also have other rights which vary from state to state. This warranty supersedes all prior warranties. Shipping costs for any return of product as part of a claim on the warranty must be paid by the customer.

Contact the Customer Service Team at 1-855-HD-HAMPTON or visit www.HamptonBay.com.

Pre-Installation

SPECIFICATIONS

Size	Speed	Volts	Amps	Watts	RPM	CFM	Net Weight	Gross Weight	Cube Feet
52 in.	Low	120	0.23	12	70	1726	19.8 lbs. (9 kg)	23.14 lbs. (10.5 kg)	1.99
	Medium		0.34	26	105	2813			
	High		0.51	59	160	4345			

NOTE: These are approximate measures. They do not include the Amps and Wattage used by the light kit.

UL LISTED

TOOLS REQUIRED

Phillips screwdriver

Flat blade screwdriver

Adjustable wrench

Electrical tape

Wire cutter / stripper

Step ladder

HARDWARE INCLUDED

NOTE: Hardware not shown to actual size.

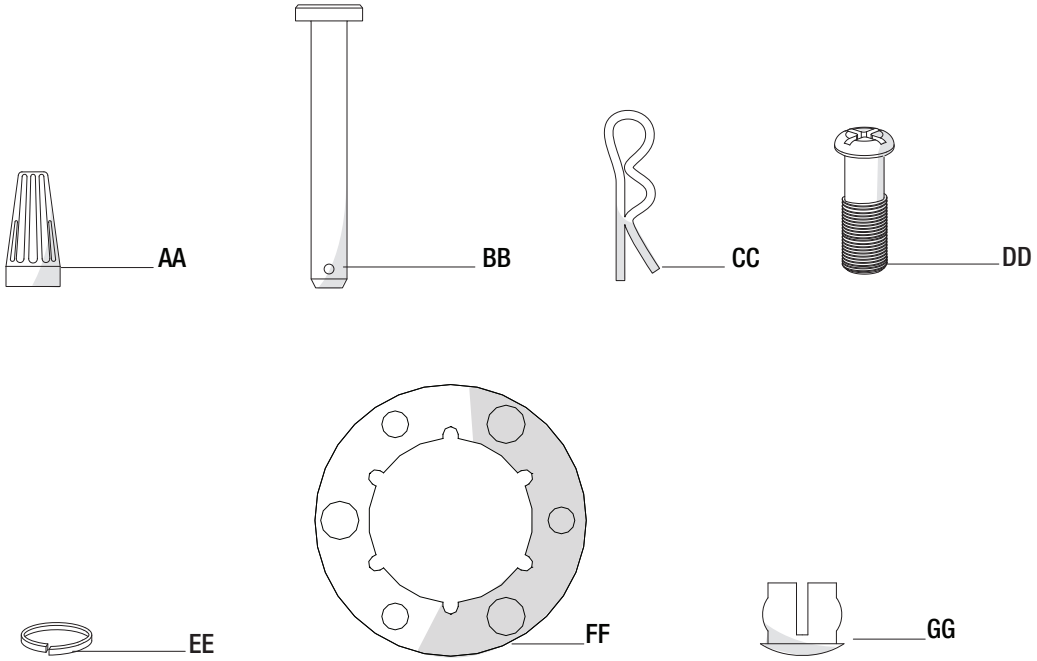

Part	Description	Quantity
AA	Plastic wire connector	3
BB	Hanger pin	1
CC	Locking pin	1
DD	Extra blade bracket screw	1

Part	Description	Quantity
EE	Extra lock washer	1
FF	Rubber gasket	1
GG	Plastic plug	1

PACKAGE CONTENTS

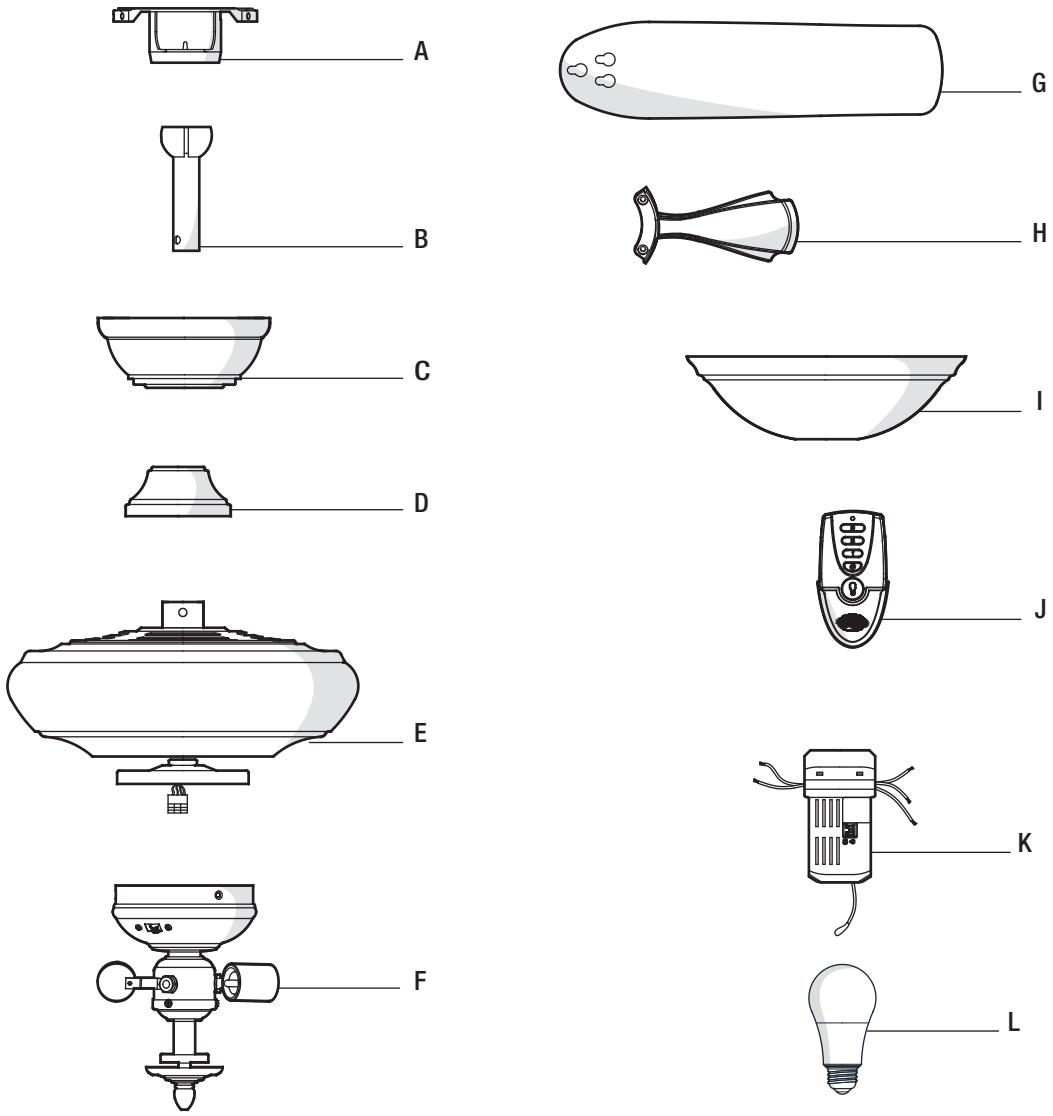

Part	Description	Quantity
A	Slide-on mounting bracket (inside canopy)	1
B	Ball/downrod assembly	1
C	Canopy with canopy ring attached	1
D	Decorative motor collar cover	1
E	Fan-motor assembly	1

Part	Description	Quantity
F	Light kit fitter assembly	1
G	Blade	5
H	Blade bracket	5
I	Glass bowl	1
J	Remote control (battery included)	1
K	Receiver	1
L	LED Light bulb, 9.5-Watt maximum	3

IMPORTANT: This product and/or components are governed by one or more of the following U.S. Patents: 5,947,436; 5,988,580; 6,010,110; 6,046,416, 6,210,117 and other patents pending.

MOUNTING OPTIONS

WARNING: To reduce the risk of fire, electric shock or personal injury, mount to an outlet box marked "Acceptable for fan support of 35 lbs. (15.9 Kg) or less," and use the screws provided with the outlet box. An outlet box commonly used for the support of lighting fixtures may not be acceptable for fan support and may need to be replaced. If in doubt, consult a qualified electrician.

If your ceiling fan does not have an existing UL-listed mounting box, then install one using the following instructions:

- ☐ Disconnect the power by removing the fuses or turning off the circuit breakers.
- ☐ Secure the outlet box directly to the building structure. Use the appropriate fasteners and materials. The outlet box and its bracing must be able to fully support the weight of the moving fan (at least 35 lbs.). Do not use a plastic outlet box.

The illustrations below show three different ways to mount the outlet box.

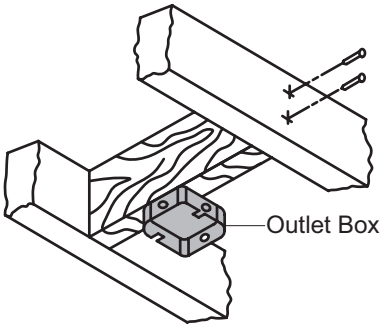

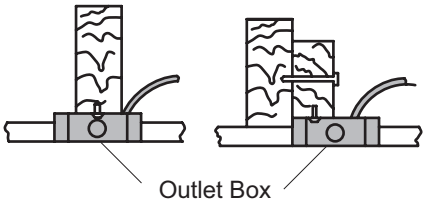

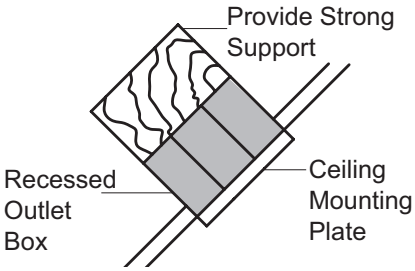

NOTE: You may need a longer downrod to maintain proper blade clearance when installing on a steep, sloped ceiling. The maximum angle allowable is 30° away from horizontal.

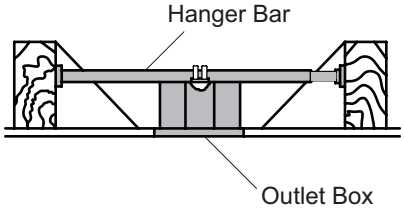

If the canopy touches the downrod, then remove the decorative canopy bottom cover and turn the canopy 180° before attaching the canopy to the mounting plate.

To hang your fan where there is an existing fixture but no ceiling joist, you may need an installation hanger bar as shown above (available at any Home Depot store).

Assembly - Standard Ceiling Mount

1 Preparing for mounting

- ☐ Remove the canopy ring (M) from the canopy (C) by turning the ring counter-clockwise until it unlocks.
- ☐ Remove the mounting bracket (A) from the canopy (C) by loosening the two canopy screws (HH) located in the “L shaped” slots.
- ☐ Remove and save the two canopy screws (II) in the round holes. This will enable you to remove the mounting bracket (A).

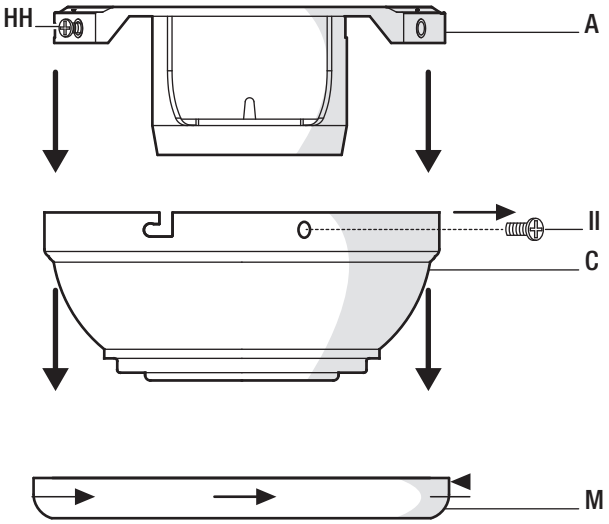

2 Routing the wires

- ☐ Route the wires exiting the top of the fan motor assembly (E) through the center of the canopy ring (M). Make sure the slots on the canopy ring (M) are on top.
- ☐ Insert the ball/downrod (B) through the canopy (C) and slide the decorative motor collar cover (D) onto the end of the ball/downrod (B). Make sure the slots on the Canopy (C) are on top.
- ☐ Route the wires exiting the top of the fan motor assembly (E) through the downrod (B) as shown.

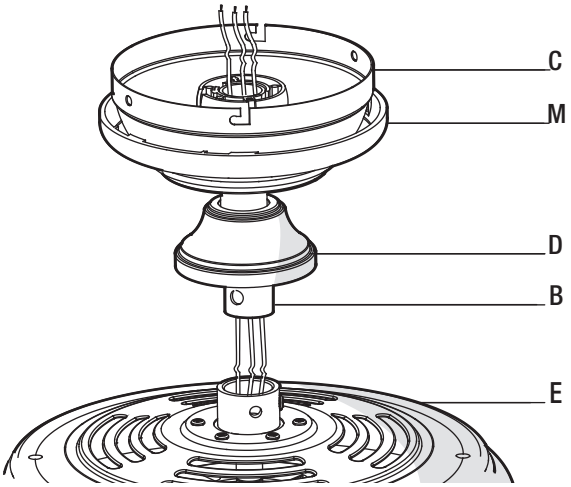

3 Assembling the fan

WARNING: Failure to properly install the locking pin could result in the fan becoming loose and possibly falling.

- ☐ Loosen, but do not remove, the setscrew (TT) on the collar (O) on top of the fan-motor assembly (E).
- ☐ Align the holes at the bottom of the downrod (B) with the holes in the collar (O) on top of the fan-motor assembly (E).
- ☐ Carefully insert the hanger pin (BB) through the holes in the collar (O) and downrod (B). Be careful not to jam the hanger pin (BB) against the wiring inside the downrod (B).
- ☐ Insert the locking pin (CC) through the hole near the end of the hanger pin (BB) until it snaps into its locked position.
- ☐ Re-tighten the setscrew (TT) on the collar (O) on top of the fan-motor assembly (E).

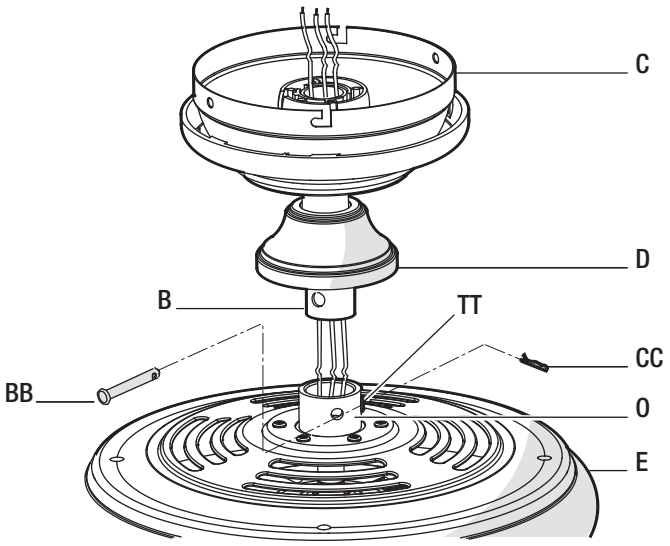

Assembly - Close-To-Ceiling Mount

1 Preparing for mounting

- ☐ Remove canopy ring (M) from the canopy (C) by turning the ring counter-clockwise until it unlocks.
- ☐ Remove the mounting bracket (A) from the canopy (C) by loosening the two canopy screws (HH) located in the “L shaped” slots
- ☐ Remove and save the two canopy screws (II) in the round holes. This will enable you to remove the mounting bracket (A).
- ☐ Remove the decorative canopy bottom cover (N) from the canopy (C) by pressing the three studs located inside the bottom of the canopy.

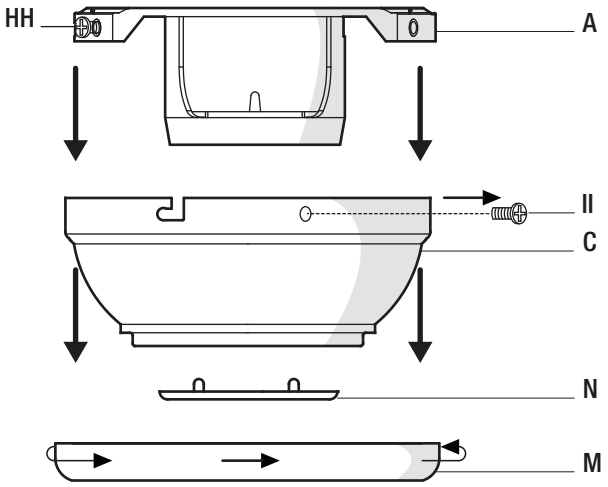

2 Routing the wires

- ☐ Remove three of the six screws and lock washers (PP) (every other one) securing the motor collar to the top of the fan-motor assembly (E).
- ☐ Route the wires exiting the top of the fan-motor assembly (E) through the rubber gasket (FF) aligning the holes in the rubber gasket (FF) with the three screw holes in the fan-motor assembly (E).
- ☐ Route the wires exiting the top of the fan-motor assembly (E) through the canopy ring (M), and the canopy (C) (make sure the slot openings for the canopy ring and canopy are on top. Place the canopy (C) over the collar (O) at the top of the motor (E).
- ☐ Align the mounting holes in the canopy (C) with the screw holes in the motor (E) and fasten using the three screws and lock washers (PP) (removed previously). Tighten the mounting screws securely.

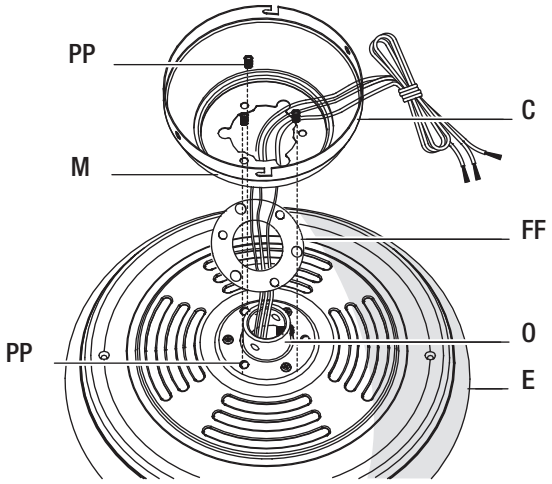

Assembly - Hanging the Fan

1 Attaching the mounting bracket to the outlet box

WARNING: To reduce the risk of fire, electric shock or personal injury, mount to an outlet box marked "Acceptable for fan support of 35 lbs. (15.9 Kg) or less," and use the screws provided with the outlet box.

NOTE: The mounting bracket (A) is designed to slide into place on an outlet box with the outlet box screws (1) installed.

- ☐ Loosen the two mounting screws (1) in the outlet box.
- ☐ Pass the 120-Volt supply wires through the center hole in the mounting bracket (A).
- ☐ Slide the mounting bracket (A) on to the mounting screws (1) and center the mounting bracket (A) in relation to the outlet box. If necessary, use leveling washers (not included) between the slide-on mounting bracket (A) and the outlet box. The flat side of the slide-on mounting bracket (A) should face toward the outlet box, as shown.
- ☐ Securely tighten the two mounting screws (1).

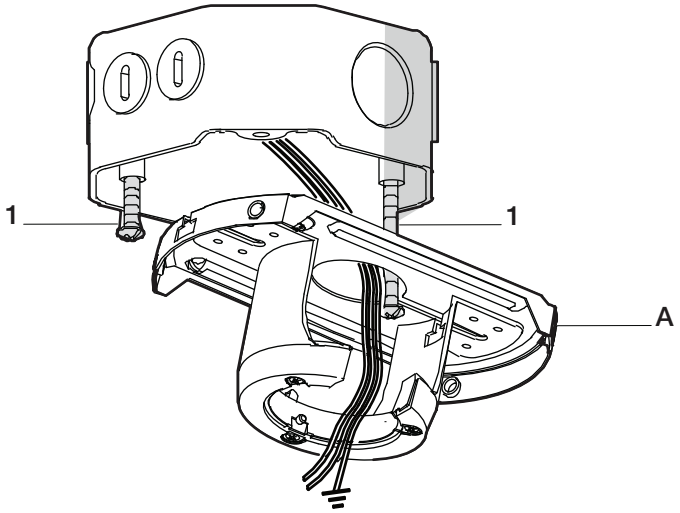

2 Hanging the fan

WARNING: The hook (XX) is only to balance the fan while making the electrical connections. Failure to hang as shown may result in the hook (XX) breaking, causing the fan to fall. The hook must pass from the inside to the outside of the canopy.

WARNING: When hanging the fan on the hook (XX) it is critical that you <u>use one of the non-slotted (round) holes</u> in the canopy (C).

- ☐ Carefully lift the fan-motor assembly (E) up to the slide-on mounting bracket (A).
- ☐ Insert the ball portion of the ball/downrod assembly into the socket of the slide-on mounting bracket.
- ☐ Turn the ball/downrod assembly clockwise until it is seated with the tab of the slide-on mounting bracket aligned with the slot in the ball.
- ☐ If using close-to-ceiling mounting, hang the fan on the hook provided by utilizing one of the holes at the outer rim of the ceiling canopy (C).

Standard mount.

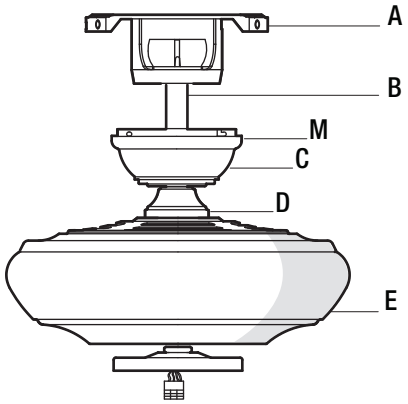

Close to ceiling mount.

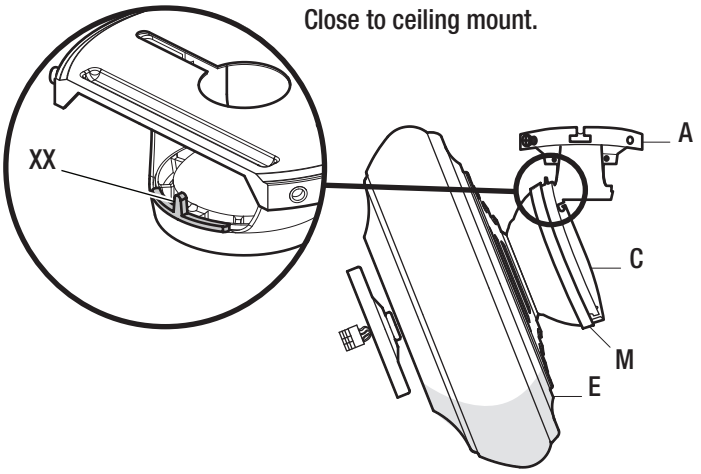

3 Setting the code on the remote control and receiver

NOTE: The frequencies on your receiver and remote control have been preset at the factory. Before installing the receiver, make sure the dip switches on the receiver and remote control are set to the same frequency. The dip switches on the remote control are located inside the battery compartment.

NOTE: The battery will weaken with age and should be replaced before leaking takes place as this will damage the remote control. Dispose of used battery properly and keep the battery out of the reach of children.

NOTE: The switch marked ON/DIM controls the dimming function of the lights: If using non-dimmable bulbs, use a ballpoint pen or small screwdriver to set the switch to ON to disable the dimming function. If using dimmable bulbs, set the switch to DIM to enable the dimming function.

- ☐ Remove the remote control (J) battery cover by pressing firmly on the arrow and sliding the cover off.
- ☐ Slide the dip switches to your choice of either up or down. The factory setting is up.
- ☐ Slide the dip switches (ZZ) on the receiver (K) to the same position as set on the remote control (J).
- ☐ Remove the protective coating from the battery.
- ☐ Install the 12-Volt battery (included) into the battery compartment of the remote control (J).
- ☐ Replace the battery cover on the remote control (J).

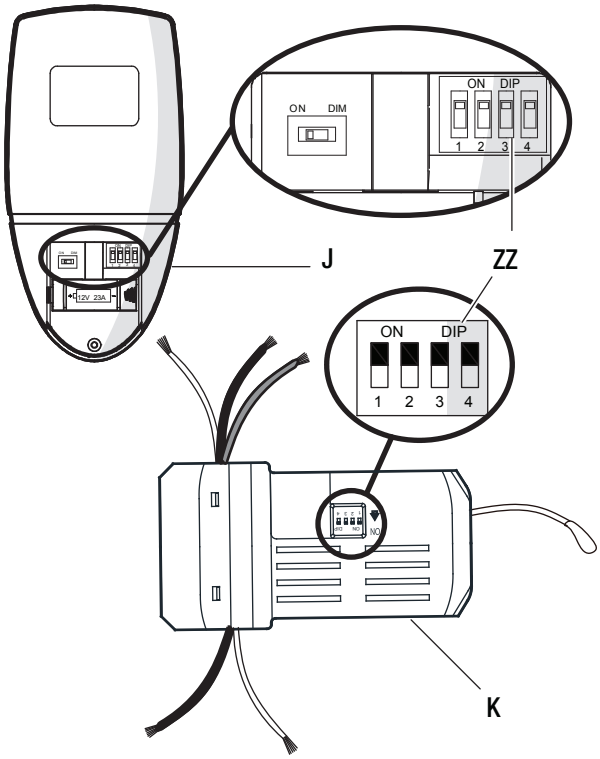

4 Installing the receiver

WARNING: To reduce the risk of fire or electric shock, remember to disconnect power. The electrical wiring must meet all local and national electrical code requirements. The electrical source and fan must be 110/120 volt, 60Hz. Do not use this product in conjunction with any variable wall control. Incorrect wire connection can damage this receiver.

CAUTION: If other fan wires are a different color, have this unit installed by a licensed electrician.

CAUTION: Do not install the receiver in a damp location or immerse in water (For indoor use only). Do not pull on or cut the receiver leads shorter. Do not drop or bump the unit.

- ☐ Position the house supply wires (AAA) to one side of the slide-on mounting bracket (A); position the fan wires (BBB) to the opposite side.
- ☐ Insert the narrow end of the receiver (as shown, flat side towards the ceiling) into the slide-on mounting bracket until it rests on top of the ball/downrod assembly.

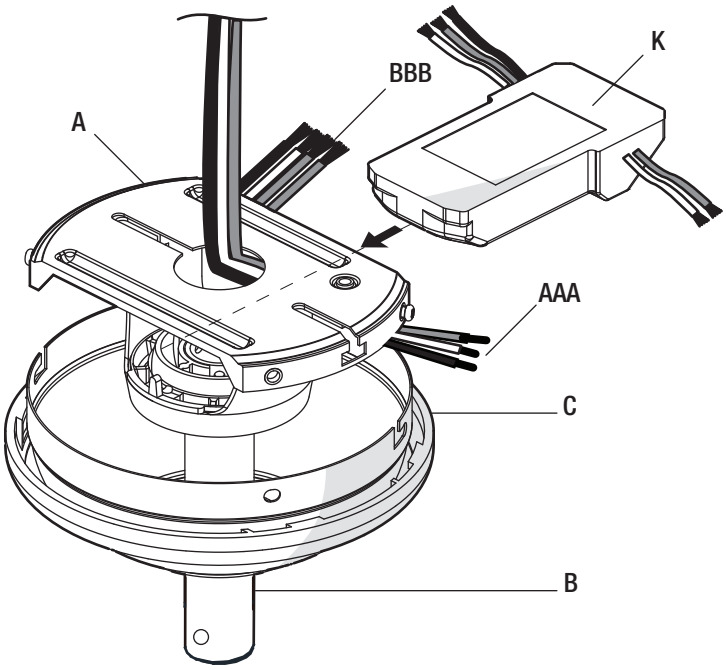

5 Wiring the receiver to the household wiring

WARNING: To avoid possible electrical shock, turn the electricity off at the main fuse box before wiring. If you feel you do not have enough electrical wiring knowledge or experience, contact a licensed electrician.

WARNING: Each wire nut supplied with this fan is designed to accept up to one 12-gauge house wire and two wires from the fan. If you have larger than 12-gauge house wiring or more than one house wire to connect to the fan wiring, consult an electrician for the proper size wire nuts to use.

IMPORTANT: Use the wire connecting nuts (AA) supplied with your fan. Secure the connectors with electrical tape and ensure there are no loose strands or connections.

- ☐ Spread the wires apart so that the green and white wires are on one side of the outlet box and the black wire is on the other side.
- ☐ Connect the green fan wires to the household ground wire (this may be a green or bare wire) using a wire connecting nut (AA).
- ☐ Connect the receiver black (or red) wire to the household black (hot) wire using a wire connecting nut (AA).
- ☐ Connect the receiver white wire to the household white wire (neutral) wire using a wire connecting nut (AA).
- ☐ Secure each wire connecting nut using electrical tape.

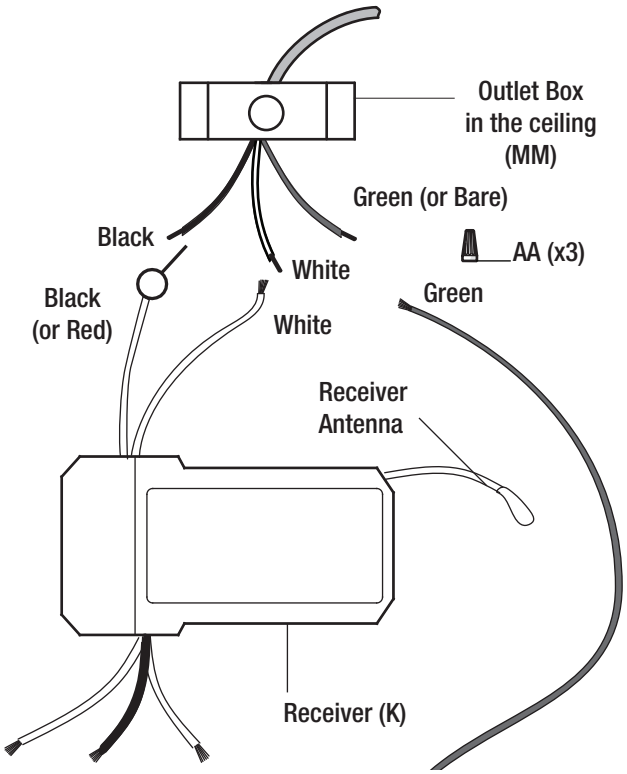

6 Wiring the fan to the receiver

WARNING: Remove the rubber motor stops on the bottom of the fan before installing the blades or testing the motor.

IMPORTANT: Use the wire connecting nuts (AA) supplied with your fan. Secure the connectors with electrical tape and ensure there are no loose strands or connections.

IMPORTANT: If after this step, you decide to check that the electrical connections have been successful, it is critical to attach the light kit using the quick connector prior to testing. The fan will not operate unless the light kit is connected to the fan.

NOTE: The fan comes with 54 in. lead wires for use with an extended ball/downrod assembly. If using the 4.5 in. ball/downrod assembly (B) provided, you can cut the lead wires to your desired length (no shorter than 12 in.).

- ☐ The fan comes with 54 in. lead wires for use with an extended ball/downrod assembly. If using the 4.5 in. ball/downrod assembly (B) provided, you can cut the lead wires to your desired length (no shorter than 12 in.) This will make extra room in the canopy (C), if you do not wish to cut the wires, you will need to neatly wrap them.
- ☐ Connect the fan motor white wire to the receiver white wire using a wire connecting nut (AA).
- ☐ Connect the fan motor black wire to the receiver black wire using a wire connecting nut (AA).
- ☐ Connect the fan motor blue wire to the receiver blue wire using a wire connecting nut (AA).
- ☐ Secure each wire connecting nut using electrical tape.
- ☐ Turn the wire connecting nut (AA) upward and push the wiring into the outlet box (MM).

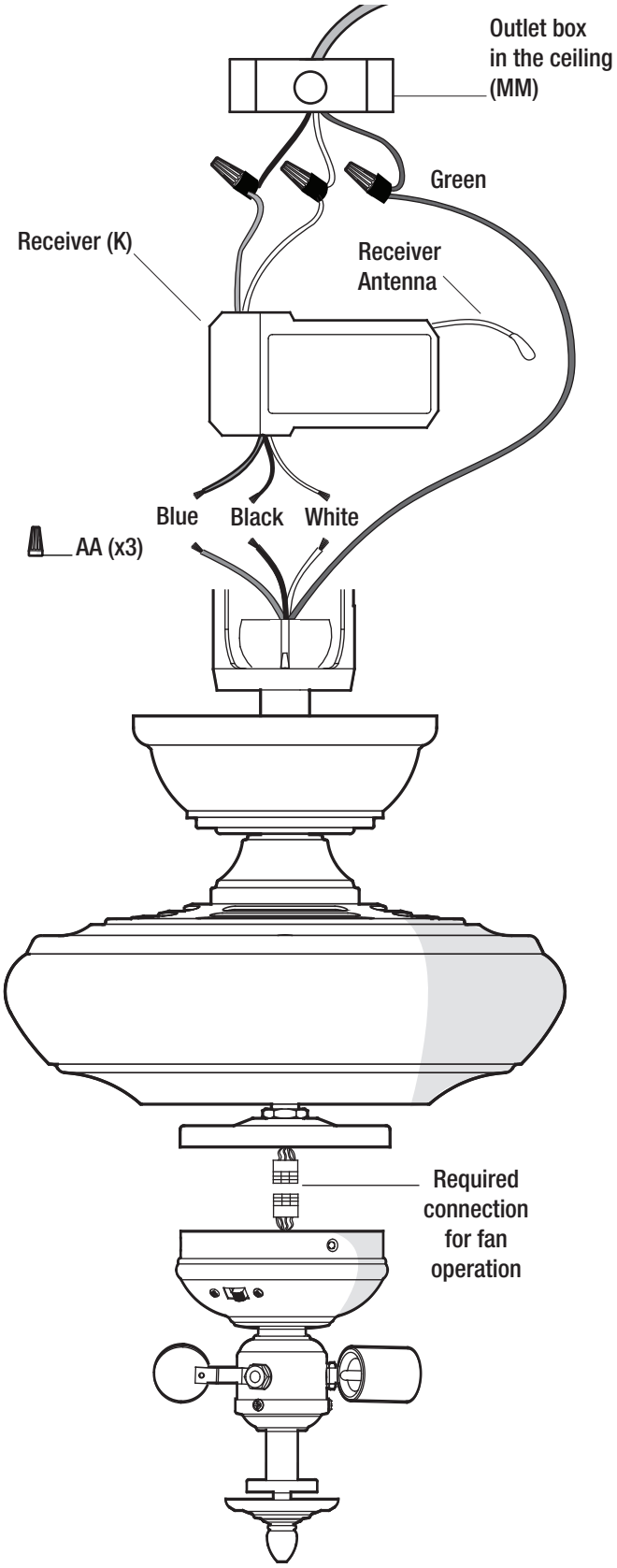

7 Wrapping the extra wire

NOTE: Follow this step ONLY if you did not cut the extra length off from the wires coming from the ceiling fan to the receiver.

- ☐ Gently wrap the excess wire around the mounting bracket, under the receiver.
- ☐ Secure with electrical tape.

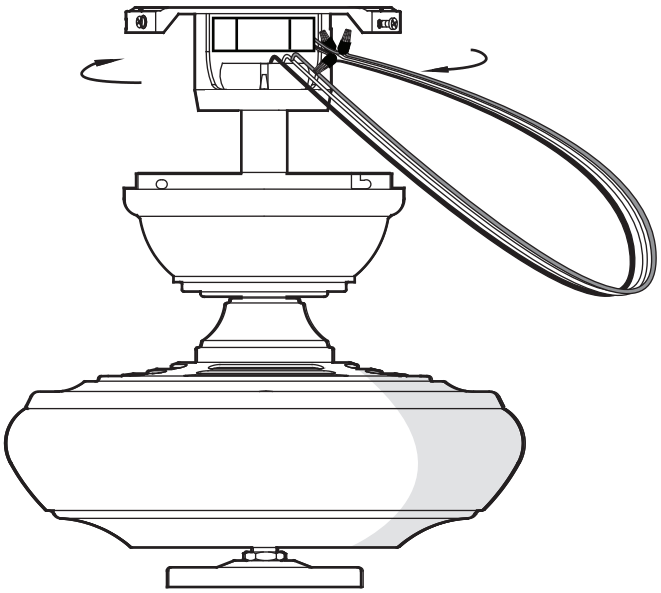

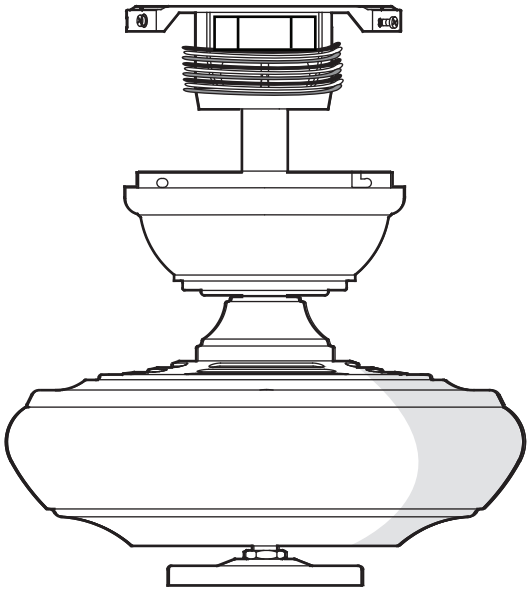

8 Mounting the fan-motor assembly (standard mount)

WARNING: When using the standard ball/downrod mounting, the tab in the ring at the bottom of the mounting bracket must rest in the groove of the hanger ball. Failure to properly seat the tab in the groove could cause damage to the wiring.

WARNING: The locking slots of ceiling canopy are provided only as an aid to mounting. Do not leave the fan assembly unattended until all four canopy screws are engaged and firmly tightened.

- ☐ Align the locking slots of the ceiling canopy (C) with the two screws in the mounting bracket (A). Push up to engage the slots and turn clockwise to lock in place.
- ☐ Firmly tighten the two mounting screws.
- ☐ **Install the two mounting screws (saved from Assembly Step 1 “Prepairing for mounting”) into the holes in the canopy (C) and tighten firmly.**
- ☐ Install the decorative canopy ring (M) by aligning the ring’s slots with the screws in the canopy (C). Rotate the ring clockwise to lock in place.

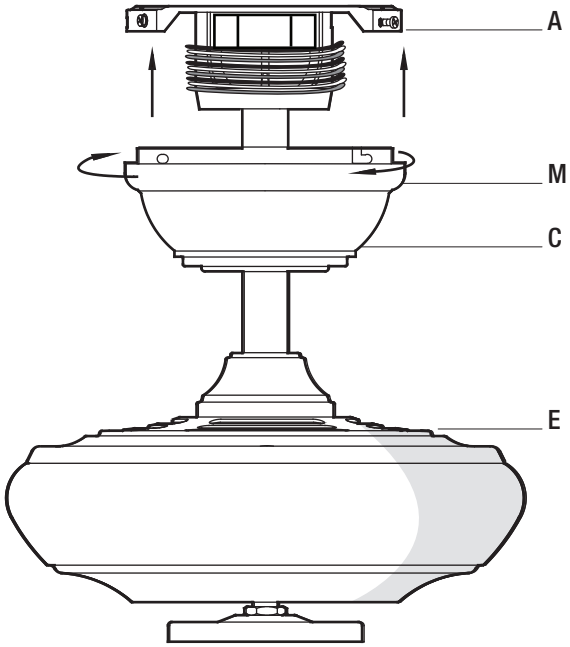

Assembly - Hanging the Fan (continued)

9 Mounting the fan-motor assembly (close-to-ceiling mount)

WARNING: The locking slots of ceiling canopy are provided only as an aid to mounting. Do not leave the fan assembly unattended until all four canopy screws are engaged and firmly tightened.

- ☐ Carefully unhook the fan from the mounting bracket (A) and align the locking slots of the ceiling canopy (C) with the two screws in the mounting bracket (A). Push up to engage the slots and turn clockwise to lock in place. Immediately tighten the two mounting screws firmly.
- ☐ **Install the two mounting screws (saved from Assembly Step 1 "Prepairing for mounting" into the holes in the canopy (C) and tighten firmly.**
- ☐ Install the decorative canopy ring (M) by aligning the ring's slots with the screws in the canopy (C). Rotate the ring clockwise to lock in place.
- ☐ You may now proceed to attaching the fan blades.

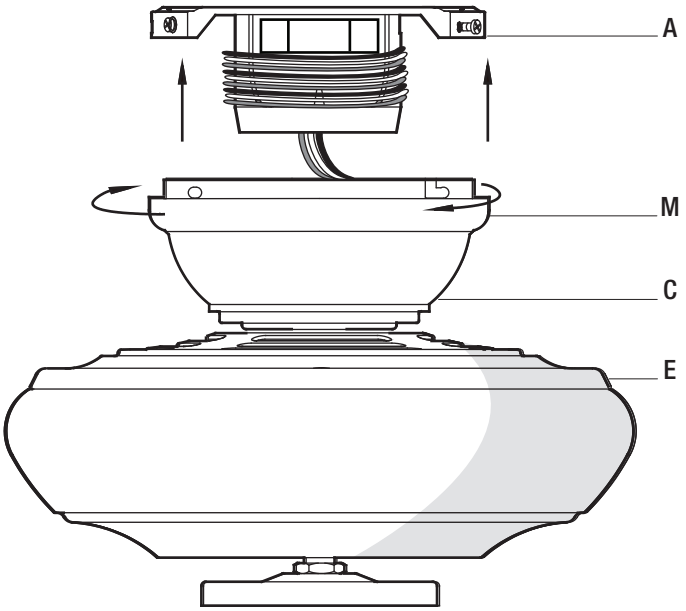

Assembly - Attaching the Fan Blades

1 Attaching the blade brackets to the motor

WARNING: Remove the rubber motor stops on the bottom of the fan before installing the blades or testing the motor.

NOTE: Your fan features revolutionary advancements for quick and easy blade installation. Including an alignment post and captive blade bracket screws.

NOTE: Your fan blades are reversible. Select the blade side finish which best accentuates your decor.

- ☐ Please note the captive blade bracket screws, are pre-attached into the blade bracket (H).
- ☐ Fasten the blade bracket (H) to the motor (E) by inserting the alignment post into the slot on the bottom of the fan-motor assembly (E) and tightening the motor screws.
- ☐ Repeat for the remaining four blade brackets (H).

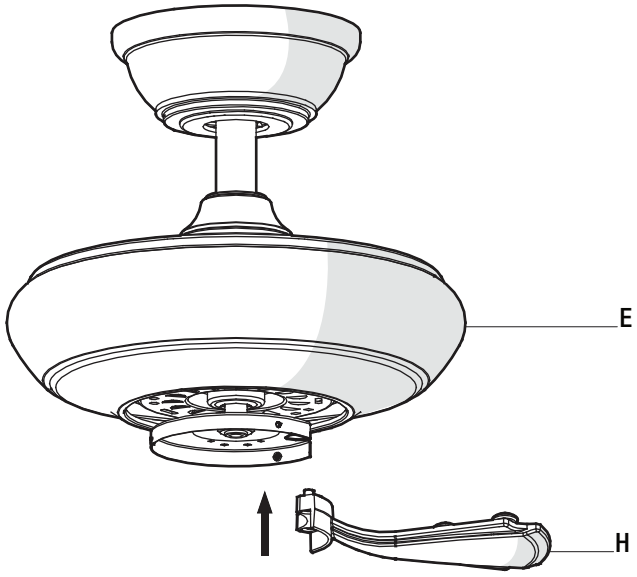

Assembly - Attaching the Fan Blades

2 Attaching the blades

- ☐ Mount the fan blades (G) to the blade bracket (H) by aligning the three key-slot holes in the blade (G) with the three posts on the top of the blade brackets (H).
- ☐ Hold the blade (G) with both hands close to the blade bracket (H) and press the blade (G) down firmly. Ensure the key-slot holes are properly seated on the blade arm posts.
- ☐ While still holding the blade (G) down with both hands, firmly slide the blade (G) away from the fan-motor assembly (E) until the blade (G) engages in the locking mechanism. Make sure the steel locking mechanism at the rear of the blade bracket (H) springs upward and snaps into place against the edge of the blade (G) indicating a secure connection.
- ☐ Visually inspect the top of the blade bracket (H) to ensure the locking mechanism is securely in place.
- ☐ Repeat for the remaining blades (G).

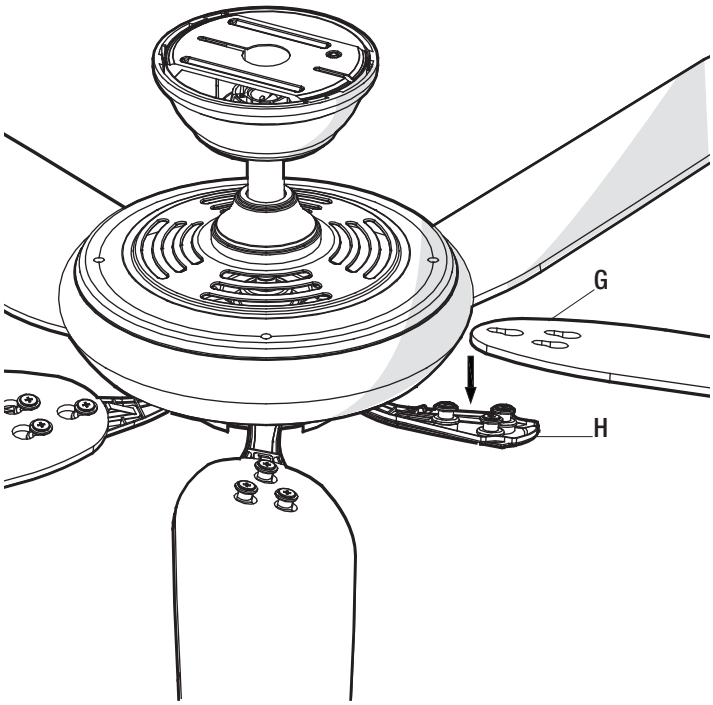

Assembly - Attaching the Lights

1 Attaching the light kit fitter assembly

CAUTION: To reduce the risk of electric shock, disconnect the electrical supply circuit to the fan before installing the light fixture.

IMPORTANT: It is critical to attach the light kit using the quick connector. The fan will not operate unless the light kit is connected to the fan.

NOTE: Notice the location of the fan's slide switch. This is the switch used to change the fan's directional rotation. For more information on the operation of this switch, see *Operating Your Fan* on page 17.

NOTE: This light kit cannot be transferred to another fan.

- ☐ Remove the three light kit mounting screws (RR) on the black bracket below the fan-motor assembly (E).
- ☐ Plug the molded adaptor plug from the light kit (F) to the molded adaptor plug from the fan-motor assembly (E). Make sure the connector latch close properly.
- ☐ Align the holes in the light kit (F) with the holes in the black bracket below the fan-motor assembly (E) and install using the light kit mounting screws (RR) that were removed in the first step above.

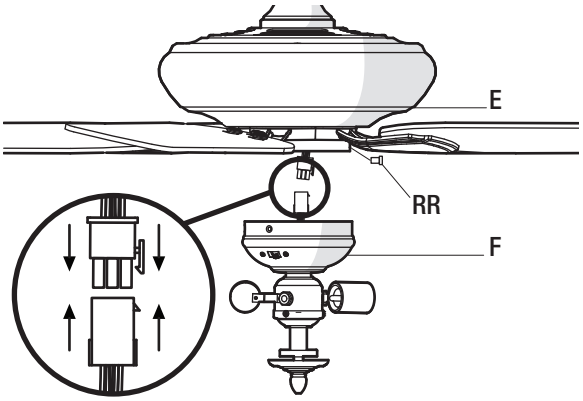

Assembly - Attaching the Lights

2 Installing the bulbs and attaching the glass bowl

CAUTION: Do not over tighten the hex nut, overtightening the hex nut may cause the glass to break.

- ☐ Remove the rubber washer (P), hex nut (Q), bottom cover (R), and finial (S) from the threaded nipple of the light kit fitter assembly (F).
- ☐ With power off, install the three LED Light bulb, (9.5-Watt maximum included) (L) by screwing into the light bulb sockets.
- ☐ Position the glass bowl (I) over the threaded nipple.
- ☐ Re-install the rubber washer (P), hex nut (Q), and bottom cover (R) to the threaded nipple to secure the glass shade properly.
- ☐ Re-install and tighten the finial nut (S).

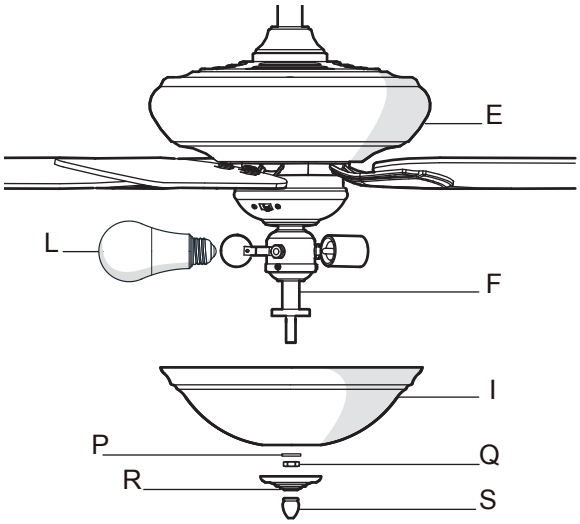

Assembly - Assembling the Fan Without the Light Kit

1 Assembling the fan without the light kit

IMPORTANT: It is critical to attach the switch cup using the quick connector. The fan will not operate unless the light kit is connected to the fan.

- ☐ Remove the three light kit mounting screws (RR) on the black bracket below the fan-motor assembly (E).
- ☐ In order to use the fan without the light kit, remove the switch cup (2) from the top of the light kit fitter assembly (F) by removing the center hex nut inside the switch cup cover, and then thread the switch cup cover off of the threaded nipple on the top of the light kit fitter assembly (F).
- ☐ Press the plastic plug (GG) (provided) into the center hole of the switch cup (2).
- ☐ Connect the quick connect couplers. (The fan will not start without this connection).
- ☐ Position the switch cup (2) onto the black bracket and reinstall the light kit mounting screws (RR).

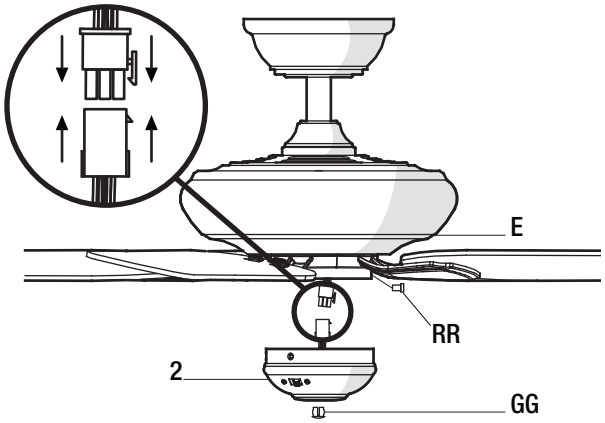

OPERATING YOUR FAN

Your fan is equipped with a remote control to operate the fan speed and lights of your new ceiling fan.

The speed setting for warm or cool weather depends on factors such as the room size, ceiling height, number of fans and so on.

The fan is shipped from the factory with the reversing switch positioned to circulate air downward. If airflow is desired in the opposite direction, turn your fan off and wait for the blades to stop turning, then slide the reversing switch (YY) (located in switch cup) to the opposite position, and turn the fan on again. The fan blades will turn in the opposite direction and reverse airflow.

NOTE: Wait for the fan to stop before reversing the direction of the blade rotation.

A. Warm weather - (Forward) A downward airflow creates a cooling effect. This allows you to set your air conditioner on a higher setting without affecting your comfort.

B. Cool weather - (Reverse) An upward airflow moves warm air off of the ceiling. This allows you to set your heating unit on a lower setting without affecting your comfort.

A. Warm weather

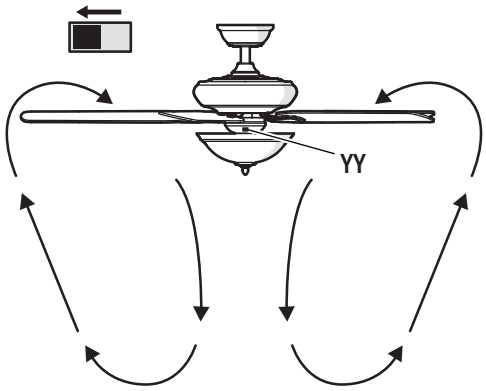

B. Cool weather

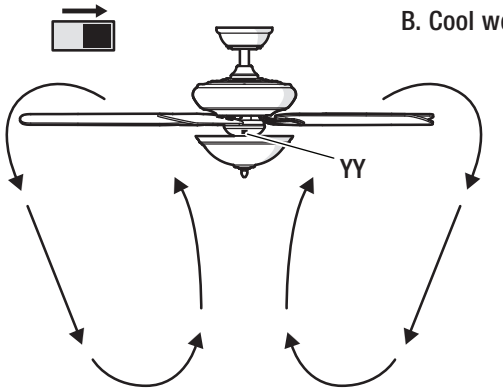

USING THE REMOTE CONTROL

NOTE: This remote is equipped with a 16-code combination. To prevent possible interference from or to other remote units, such as garage door openers, car alarms, or security systems, change the combination code but be sure that the code on both the remote control and receiver in the fan are the same.

- Press the desired button on the remote control (J) to operate the fan:
  - "3" button: Press to turn the fan on and set the fan speed to high.
  - "2" button: Press to turn the fan on and set the fan speed to medium.
  - "1" button: Press to turn the fan on and set the fan speed to low.
  - Power button: Press to turn the fan off.
  - Light button: Press and release immediately to turn the light on or off. Press and hold to dim or brighten the bulbs to the desired level and then release (the dimmer function is for dimmable bulbs only).

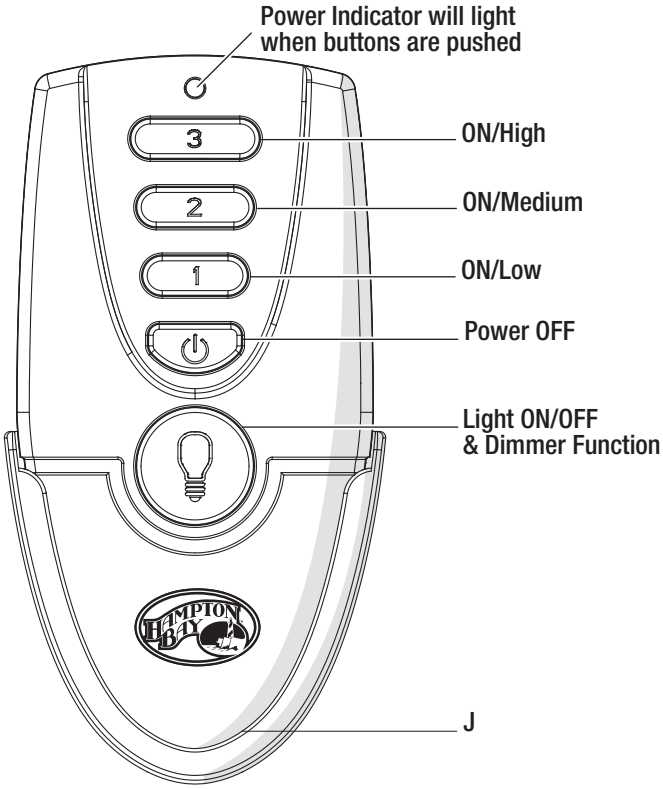

Care and Cleaning

WARNING: Make sure the power is off before cleaning your fan.

- ☐ Because of the fan's natural movement, some connections may become loose. Check the support connections, brackets, and blade attachments twice a year. Make sure they are secure. It is not necessary to remove the fan from the ceiling.
- ☐ Clean your fan periodically to help maintain its new appearance over the years. Do not use water when cleaning, as this could damage the motor, or the wood, or possibly cause an electrical shock. Use only a soft brush or lint-free cloth to avoid scratching the finish. The plating is sealed with a lacquer to minimize discoloration or tarnishing.
- ☐ You can apply a light coat of furniture polish to the wood for additional protection and enhanced beauty. Cover small scratches with a light application of shoe polish.
- ☐ You do not need to oil your fan. The motor has permanently lubricated sealed ball bearings.

Troubleshooting

Problem	Solution
The fan will not start.	☐ Check the main and branch circuit fuses or breakers. ☐ Check that the light kit plug is connected to the motor plug. ☐ Check the line wire connections to the fan and switch wire connections in the switch housing. ☐ Check the battery in the remote control to make sure the protective wrap has been removed and it is oriented properly. ☐ Ensure you are in the normal range of 10-20 ft. ☐ Ensure the dip switch settings are the same on the remote control and receiver. ☐ Remember to turn off the power supply before checking the dip switches settings.
The fan is noisy.	☐ Ensure all motor housing screws are snug. ☐ Ensure the screws that attach the fan blade bracket to the motor hub are tight. ☐ Ensure the wire nut connections are not rattling against each other or the interior wall of the switch housing. ☐ Allow a 24-hour "breaking in" period. Most noises associated with a new fan disappear during this time. ☐ If you are using the Ceiling Fan light kit, ensure the screws securing the glassware are tight. Check that the light bulbs are also secure. ☐ Ensure the canopy is a short distance from the ceiling. It should not touch the ceiling. ☐ Ensure your outlet box is secure and rubber isolator pads were used between the mounting plate and outlet box.
The fan wobbles.	☐ Check that all blade bracket screws are secure and that all the blades are fully latched into place. ☐ Most fan wobble problems are caused when blade levels are unequal. Check this level by selecting a point on the ceiling above the tip of one of the blades. Measure from a point on the center of each blade to the point on the ceiling. Measure this distance. Rotate the fan until the next blade is positioned for measurement. Repeat for each blade. Any measurement deviation should be within 1/8 in. Run the fan for ten minutes. If the fan continues to wobble please contact Customer Service and a balancing kit will be sent to you at no charge.

This equipment has been tested and found to comply with the limits for a Class B digital device, pursuant to Part 15 of the FCC Rules. These limits are designed to provide reasonable protection against harmful interference in a residential installation. This equipment generates uses and can radiate radio frequency energy and, if not installed and used in accordance with the instructions, may cause harmful interference to radio communications. However, there is no guarantee that interference will not occur in a particular installation. If this equipment does cause harmful interference to radio or television reception, which can be determined by turning the equipment off and on, the user is encouraged to try to correct the interference by one or more of the following measures:

- Reorient or relocate the receiving antenna.
- Increase the separation between the equipment and receiver.
- Connect the equipment into an outlet on a circuit different from that to which the receiver is connected.
- Consult the dealer or an experienced radio/TV technician for help.

CAUTION:
Any changes or modifications not expressly approved by the grantee of this device could void the user's authority to operate the equipment.
This device complies with Part 15 of the FCC Rules. Operation is subject to the following two conditions:
(1) This device may not cause harmful interference, and
(2) this device must accept any interference received, including interference that may cause undesired operation.

Questions, problems, missing parts? Before returning to the store call
Hampton Bay Customer Service
8 a.m. - 6 p.m., EST, Monday-Friday

1-855-HD-HAMPTON

HAMPTONBAY.COM

Retain this manual for future use.

X0000000000-A

Artículo núm. 1002 707 963, 1002 707 962
Modelo núm. 91010, 91013
Modelo núm. 52-SKV
aprobado por UL

GUÍA DE USO Y MANTENIMIENTO

VENTILADOR DE TECHO FLOWE DE 1.32 M

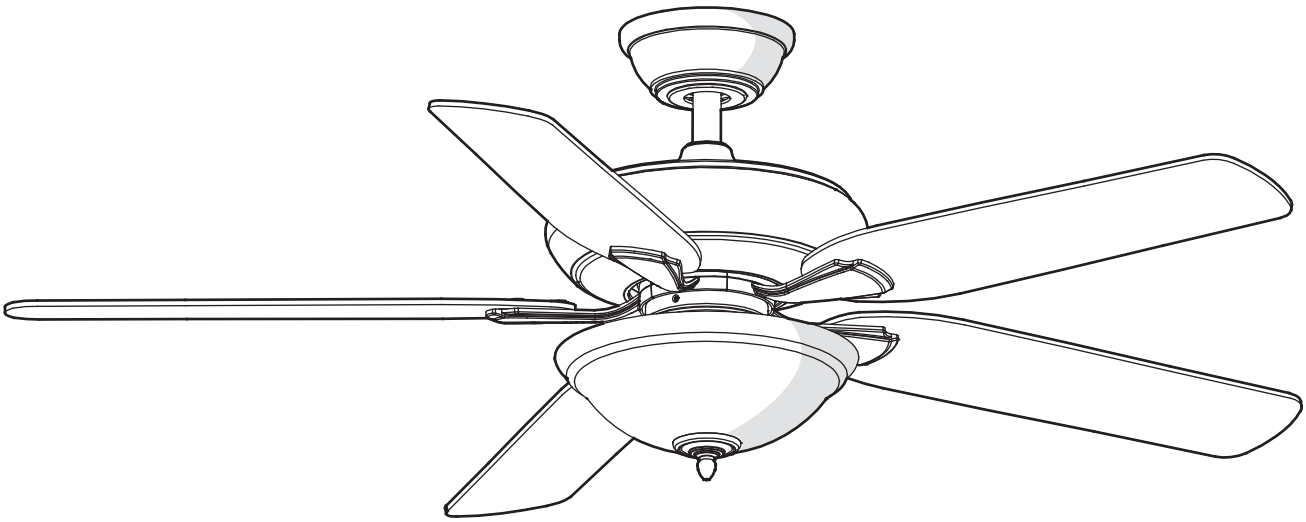

¿Preguntas, problemas o piezas faltantes? Antes de regresar a la tienda, llama al servicio al cliente de Hampton Bay de lunes a viernes de 8 a.m. a 6 p.m. (hora estándar del Este)

1-855-HD-HAMPTON

HAMPTONBAY.COM

Para ver un video instructivo sobre cómo instalar este producto:

1. **Ir a www.homedepot.com e introduzca el artículo o el número de modelo, que se encuentra en la part superior esquina derecha de la portada de este manual de instrucciones, en el campo de búsqueda.**
2. **Haga clic en su producto de la lista de resultados de búsqueda y hacer clic en el enlace del video en el la sección "Descripción del producto".**

GRACIAS POR TU COMPRA

Apreciamos la confianza que has depositado en Hampton Bay al comprar este ventilador de techo. Nos esforzamos para continuamente crear productos de calidad diseñados para mejorar tu hogar. Visítanos por Internet para ver nuestra línea completa de productos disponibles para las necesidades de mejoras de tu hogar.

¡Gracias por elegir Hampton Bay!