HOME
DECORATORS
COLLECTION

Item #1000 020 187, 458 633,
458 611, 458 301
Model #26666, 26662, 26661, 26663
UL Model #52-WWDIV

USE AND CARE GUIDE

WINDWARD IV 52-INCH CEILING FAN

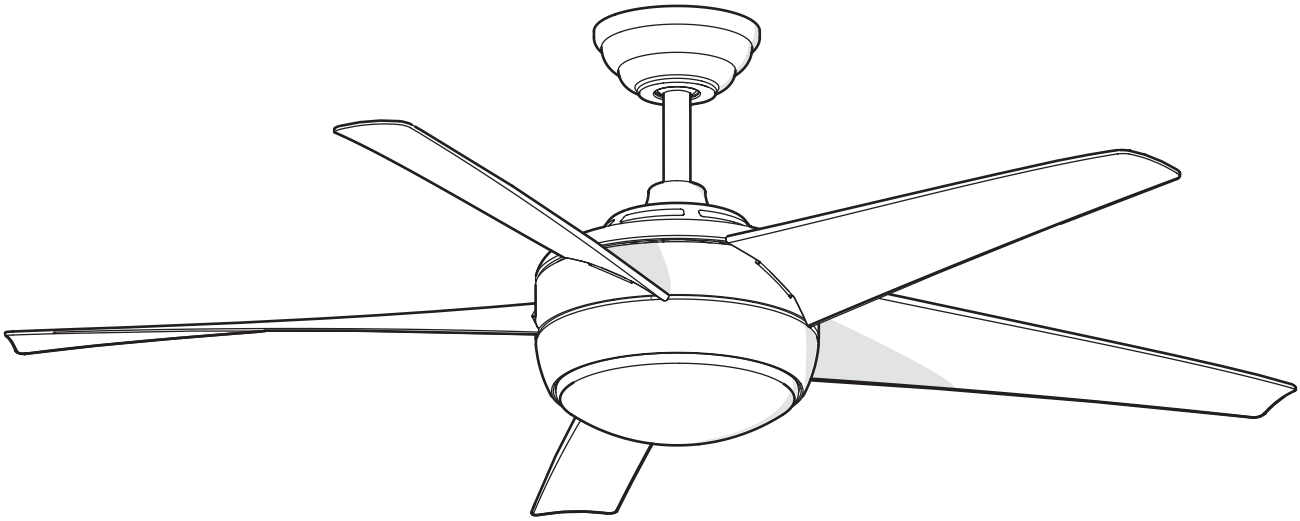

Questions, problems, missing parts? Before returning to the store,
call Home Decorators Collection Customer Service
8 a.m. - 6 p.m., EST, Monday-Friday.

1-800-986-3460

HOMEDEPOT.COM/HOMEDECORATORS

THANK YOU

We appreciate the trust and confidence you have placed in Home Decorators Collection through the purchase of this ceiling fan. We strive to continually create quality products designed to enhance your home. Visit us online to see our full line of products available for your home improvement needs. Thank you for choosing Home Decorators Collection!

Table of Contents

Table of Contents 2

Safety Information 2

Warranty 3

Pre-Installation 3

Installation 6

Assembly 7

Operation 15

Care and Cleaning 16

Troubleshooting 16

Safety Information

READ AND SAVE THESE INSTRUCTIONS.

1. To reduce the risk of electric shock, ensure the electricity has been turned off at the circuit breaker or fuse box before you begin.
2. All wiring must be in accordance with the National Electrical Code ANSI/NFPA 70 and local electrical codes. Electrical installation should be performed by a qualified licensed electrician.
3. The outlet box and support structure must be securely mounted and capable of reliably supporting 35 lbs. (15.9 kg). Use only UL Listed outlet boxes marked “Acceptable for Fan Support of 35 lbs. (15.9 kg) or less.”
4. The fan must be mounted with a minimum of 7 ft (2.1 m) clearance from the trailing edge of the blades to the floor.
5. Do not operate the reversing switch while the fan blades are in motion. You must turn the fan off and stop the blades before you reverse the blade direction.
6. Do not place objects in the path of the blades.
7. Electrical diagrams are for reference only. Light kits that are not packed with the fan must be UL-listed and marked suitable for use with the model fan you are installing. Switches must be UL General Use Switches. Refer to the instructions packaged with the light kits and switches for proper assembly.
8. After making electrical connections, spliced conductors should be turned upward and pushed carefully up into the outlet box. The wires should be spread apart with the grounded conductor and the equipment-grounding conductor on one side of the outlet box.
9. All setscrews must be checked and retightened where necessary before installation.

This equipment has been tested and found to comply with the limits for a Class B digital device, pursuant to Part 15 of the FCC rules. These limits are designed to provide reasonable protection against harmful interference in a residential installation. This equipment generates, uses and can radiate radio frequency energy and if not installed and used in accordance with the instructions, may cause harmful interference to radio communications. However, there is no guarantee that interference will not occur in a particular installation. If this equipment does cause harmful interference to radio or television reception, which can be determined by turning the equipment off and on, the user is encouraged to try correct the interference by one or more of the following measures:
- Reorient the receiving antenna.
- Increase the separation between the equipment and receiver.
- Connect the equipment into and outlet on a circuit different from that to which the receiver is connected.
- Consult the dealer or an experienced radio/TV technician for help.

WARNING: To reduce the risk of electric shock, This fan must be installed with an isolating wall switch.

WARNING: To reduce the risk of personal injury, do not bend the blade brackets (also referred to as flanges) during assembly or after installation. Do not insert objects in the path of the blades.

WARNING: To reduce the risk of fire, electric shock or personal injury, mount to outlet box marked “acceptable for fan support of 35lbs. (15.9 Kg) or less” and use screws provided with the outlet box.

WARNING: To reduce the risk of fire or electric shock, do not use this fan with any solid-state speed control device.

WARNING: To avoid possible electrical shock, turn the electricity off at the main fuse box before wiring. If you feel you do not have enough electrical wiring knowledge or experience, contact a licensed electrician.

WARNING: Electrical diagrams are for reference only. Optional use of any light kit shall be UL-listed and marked suitable for use with this fan.

WARNING: To reduce the risk of fire or electric shock, this fan should only be used with fan speed control part no. MR140A manufactured by Satellite Electric Co., LTD.

CAUTION: To reduce the risk of personal injury, use only the screws provided with the outlet box.

CAUTION: To avoid personal injury or damage to the fan and other items, use caution when working around or cleaning the fan.

CAUTION: Changes or modifications not expressly approved by the party responsible for compliance could void the user’s authority to operate the equipment.

This device complies with part 15 of the FCC rules, operation is subject to the following two conditions. (1) this device may not cause harmful interference and (2) this device must accept any interference received, including interference that may cause undesired operation.

Warranty

The supplier warrants the fan motor to be free from defects in workmanship and material present at time of shipment from the factory for a lifetime after the date of purchase by the original purchaser. The supplier also warrants that all other fan parts, excluding any glass or acrylic blades, to be free from defects in workmanship and material at the time of shipment from the factory for a period of two years after the date of purchase by the original purchaser. We agree to correct such defects without charge or at our option replace with a comparable or superior model if the product is returned. To obtain warranty service, you must present a copy of the receipt as proof of purchase. All costs of removing and reinstalling the product are your responsibility. Damage to any part such as by accident, misuse, improper installation, or by affixing any accessories, is not covered by this warranty. Because of varying climatic conditions this warranty does not cover any changes in brass finish, including rusting, pitting, corroding, tarnishing, or peeling. Brass finishes of this type give their longest useful life when protected from varying weather conditions. A certain amount of “wobble” is normal and should not be considered a defect. Servicing performed by unauthorized persons shall render the warranty invalid. There is no other express warranty. Home Decorators Collection hereby disclaims any and all warranties, including but not limited to those of merchantability and fitness for a particular purpose to the extent permitted by law. The duration of any implied warranty which cannot be disclaimed is limited to the time period as specified in the express warranty. Some states do not allow a limitation on how long an implied warranty lasts, so the above limitation may not apply to you. The retailer shall not be liable for incidental, consequential, or special damages arising out of or in connection with product use or performance except as may otherwise be accorded by law. Some states do not allow the exclusion of incidental or consequential damages, so the above exclusion or limitation may not apply to you. This warranty gives specific legal rights, and you may also have other rights which vary from state to state. This warranty supersedes all prior warranties. Shipping costs for any return of product as part of a claim on the warranty must be paid by the customer.

Contact the Customer Service Team at 1-800-986-3460 or visit www.HomeDepot.com/homedecorators.

Pre-Installation

SPECIFICATIONS

Size	Speed	Volts	Airflow CFM	Fan Power Consumption (Without Lights) WATT	Airflow Efficiency (Higher Is Better) CFM/WATT	Net Weight	Gross Weight	Cube Feet
52 in.	Low	120	XXXX	XX	XXX	20.2 lbs (9.2 kgs)	23.1 lbs (10.5 kgs)	1.7 ft.
	Medium		XXXX	XX	XXX			
	High		XXXX	XX	XXX			

NOTE: These are approximate measures. They do not include the Amps and Wattage used by the light kit.

TOOLS REQUIRED

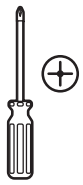
Phillips screwdriver

Flat blade screwdriver

Adjustable wrench

Electrical tape

Wire cutter

Step ladder

Pre-Installation (continued)

HARDWARE INCLUDED

NOTE: Hardware not shown to actual size.

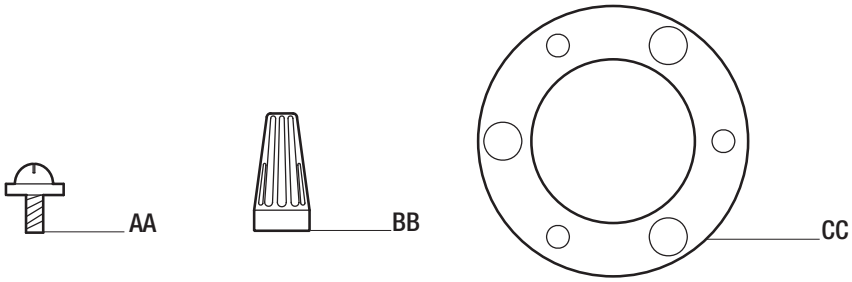

Part	Description	Quantity
AA	Blade attachment screws	16
BB	Wire connecting nut	3
CC	Rubber Gasket	1

Pre-Installation (continued)

PACKAGE CONTENTS

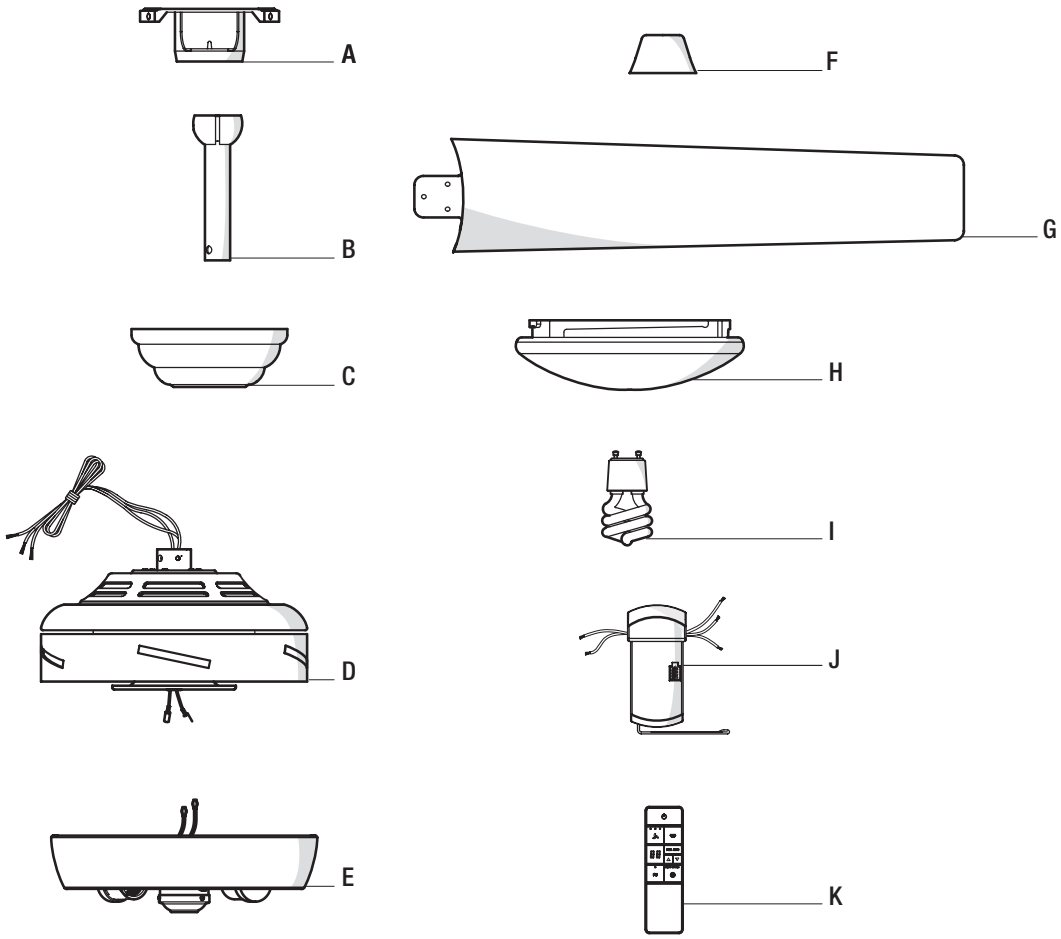

Part	Description	Quantity
A	Slide-on mounting bracket (inside canopy)	1
B	Ball/downrod assembly	1
C	Canopy with canopy ring attached	1
D	Fan-motor assembly	1
E	Light kit fitter assembly	1

Part	Description	Quantity
F	Decorative motor collar cover	1
G	Blade	5
H	Glass bowl	1
I	CFL Bulb, 13-watts maximum	2
J	Receiver	1
K	Remote (batteries included)	1

IMPORTANT: This product and/or components are governed by one or more of the following U.S. Patents: 5,947,436; 5,988,580; 6,010,110; 6,046,416, 6,210,117 and other patents pending.

MOUNTING OPTIONS

WARNING: To reduce the risk of fire, electric shock or personal injury, mount to outlet box marked "acceptable for fan support of 35lbs. (15.9 Kg) or less" using the screws provided with the outlet box. An outlet box commonly used for the support of lighting fixtures may not be acceptable for fan support and may need to be replaced. If in doubt, consult a qualified electrician.

If your ceiling fan does not have an existing UL-listed mounting box, then install one using the following instructions:

- ☐ Disconnect the power by removing the fuses or turning off the circuit breakers.
- ☐ Secure the outlet box directly to the building structure. Use the appropriate fasteners and materials. The outlet box and its bracing must be able to fully support the weight of the moving fan (at least 35 lbs.). Do not use a plastic outlet box.

The illustrations below show three different ways to mount the outlet box.

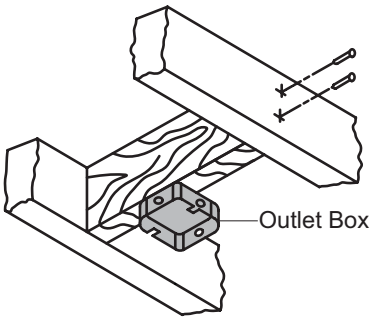

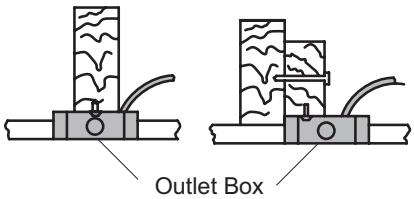

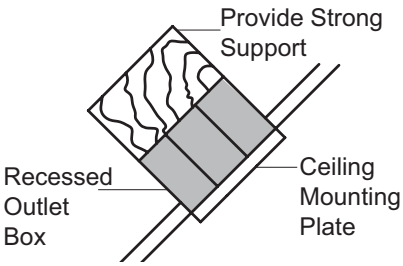

NOTE: You may need a longer downrod to maintain proper blade clearance when installing on a steep, sloped ceiling. The maximum angle allowable is 30° away from horizontal.

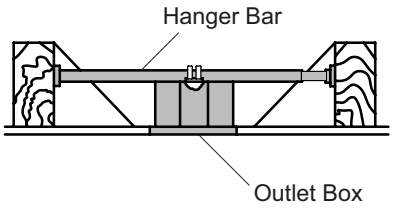

If the canopy touches the downrod, then remove the decorative canopy bottom cover, and turn the canopy 180° before attaching the canopy to the mounting plate.

To hang your fan where there is an existing fixture but no ceiling joist, you may need an installation hanger bar as shown above (available at any Home Depot store).

Assembly - Standard Ceiling Mount

1 Preparing for mounting

- ☐ Remove the canopy ring (FF) from the canopy (C) by turning the ring counter-clockwise until it unlocks.
- ☐ Remove the mounting bracket (A) from the canopy (C) by loosening the two canopy screws (JJ) located in the “L shaped” slots.
- ☐ Remove and save the two canopy screws (II) in the round holes. This will enable you to remove the mounting bracket (A).

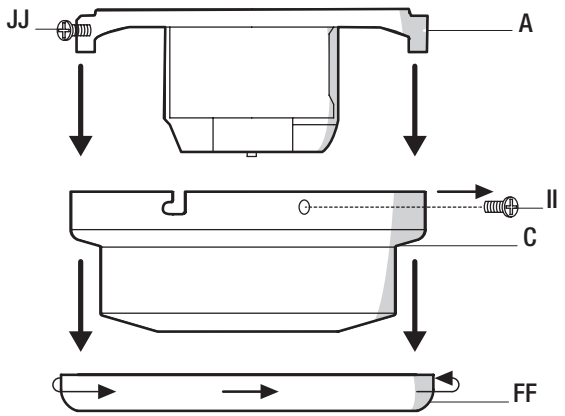

2 Routing the wires

- ☐ Route the wires exiting the top of the fan motor (D) into the decorative motor collar cover (F) and through the canopy ring (FF).
- ☐ Make sure the slot openings are on top and route the wires through the canopy (C) and then through the ball/downrod assembly (B).

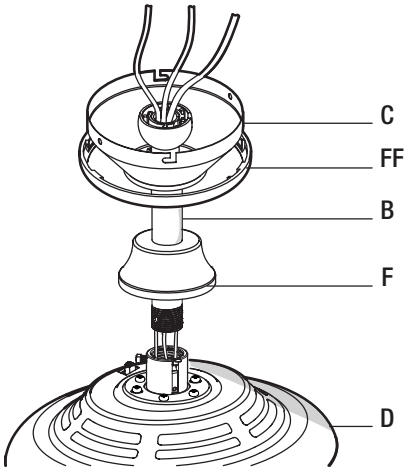

3 Assembling the fan

CAUTION: To ensure wobble-free operation and to avoid damage to the fan, the downrod (B) and the setscrew (DD) must be completely tightened

NOTE: This fan is equipped with a safety tab (EE). Should the setscrew (DD) ever become loose while the fan is running in reverse, the safety tab (EE) will engage and stop the fan from falling.

- ☐ Remove the setscrew (DD) by turning it counterclockwise.
- ☐ Install the downrod (B) by inserting it into the motor collar (M), and turning it clockwise until it is tight.
- ☐ Reinstall the setscrew (DD) turning clockwise until tight.

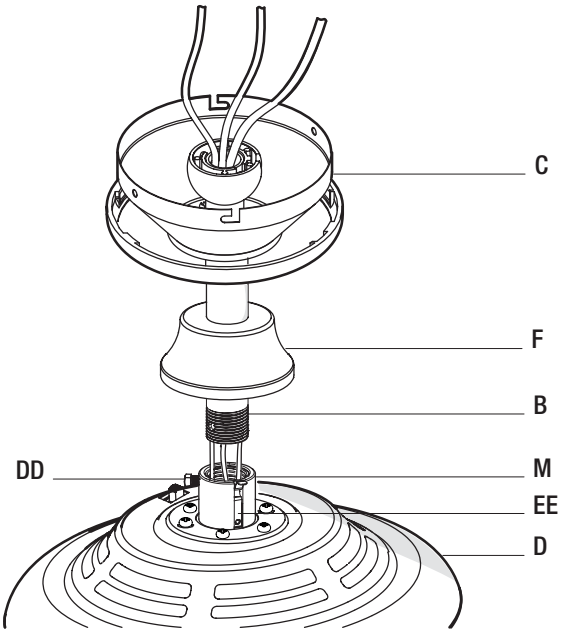

Assembly - Close-To-Ceiling Mount

1 Close-to-Ceiling Mounting

- ☐ Remove the canopy ring (FF) from the canopy (C) by turning the ring counter-clockwise until it unlocks.
- ☐ Remove the mounting bracket (A) from the canopy (C) by loosening the two canopy screws (JJ) located in the “L shaped” slots.
- ☐ Remove and save the two canopy screws (II) in the round holes. This will enable you to remove the mounting bracket (A).
- ☐ Remove the decorative canopy bottom cover (L) from the canppy (C) by depressing the three studs.

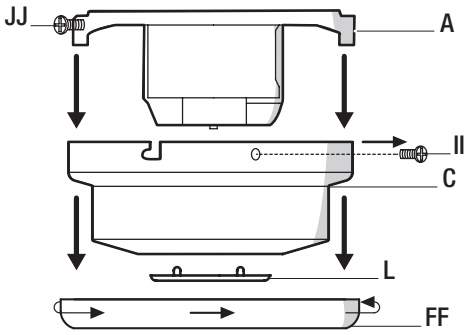

2 Routing the wires

- ☐ Remove three of the six screws and lock washers (every other one) securing the motor collar (M) to the top of the fan motor housing (D).
- ☐ Place the rubber gasket (CC) over the remaining three screws, route the wires exiting the top of the fan motor through the canopy ring (FF) (make sure the slot opening is on top), then proceed to place the ceiling canopy (C) over the collar at the top of the motor (D).
- ☐ Align the mounting holes with the holes in the motor (D) and fasten, using the three screws and lock-washers removed previously. Tighten the mounting screws securely.

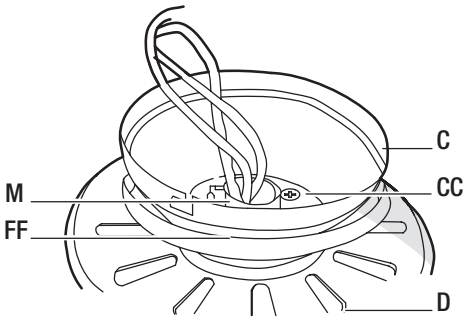

Assembly - Hanging the Fan

3 Attaching the fan to the electrical box

WARNING: To reduce the risk of fire, electric shock or personal injury, mount to outlet box marked “acceptable for fan support of 35lbs. (15.9 Kg) or less” using the screws provided with the outlet box.

- ☐ Pass the 120-Volt supply wires through the center hole in the mounting bracket (A).
- ☐ Install the ceiling mounting bracket on the outlet box by sliding the mounting bracket (A) over the two screws (UU) provided with the outlet box. If necessary, use leveling washers (not included) between the mounting bracket (A) and the outlet box. Note that the flat side of the mounting bracket (A) is toward the outlet box. When using close-to-ceiling mounting, it is important that the mounting bracket be level.
- ☐ Securely tighten the two mounting screws (UU).

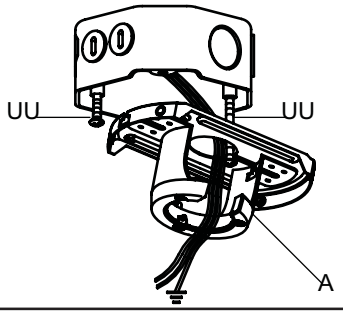

4 Hanging the fan

WARNING: The hook as shown is only to balance the fan while attaching wiring. Failure to hang as shown may result in hook breaking, causing the fan to fall. The hook must pass from inside to the outside of the canopy.

- ☐ Carefully lift the fan motor assembly (D) up to the mounting bracket (A).
- ☐ Seat the hanger ball portion of the ball/downrod assembly (B) in the mounting bracket socket. Ensure that the tab on the mounting bracket (A) socket is properly seated in the groove in the hanger ball. If using close-to-ceiling mounting, hang the fan on the hook provided by utilizing one of the holes at the outer rim of the ceiling canopy (C).

Standard mount.

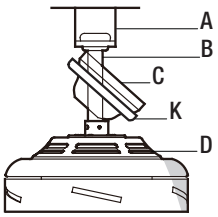

Close to ceiling mount.

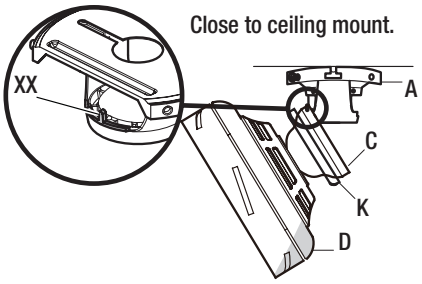

5 Setting the remote control codes

NOTE: The frequencies on your receiver and hand unit have been preset at the factory. Before installing the receiver, make sure the dip switches on the receiver and hand unit are set to the same frequency. The dip switches on the hand unit are located inside the battery compartment.

NOTE: The battery will weaken with age and should be replaced before leaking takes place as this will damage the hand unit. Dispose of the used battery properly and keep the battery out of the reach of children.

NOTE: It is imperative that the code used for both transmitter and receiver is exactly the same, otherwise remote controller will not work.

- ☐ Setting the Code on the Remote
- ☐ Remove the battery cover on the back of the remote control (K) by pressing firmly on the arrow and sliding the cover off.
- ☐ Slide the code switches to your choice of either up or down. The factory setting is up.
- ☐ From the factory, the remote displays °F, slide the dip switch °C/°F to display °C.
- ☐ For fans with incandescent bulbs, slide the dip switch O/D to the position marked “D”, if you are not using incandescent bulbs slide the dip switch to the “O” position.
- ☐ Install 2 AAA batteries (included).
- ☐ Replace the battery cover on the remote control (K).
- ☐ Setting the Code on the Receiver
- ☐ Slide the code switches on the receiver (J) to the same positions as set on the remote control (A).
- ☐ Insert the silicone rubber stopper into the hole on the receiver (J) to cover the dip switches.

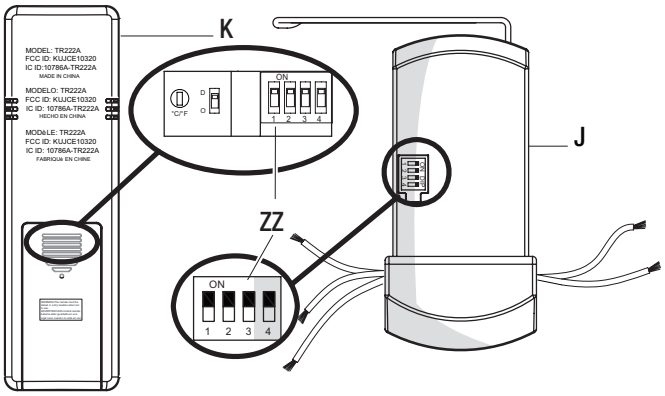

6 Installing the receiver

WARNING: To reduce the risk of fire or electric shock, remember to disconnect power. The electrical wiring must meet all local and national electrical code requirements. The electrical source and fan must be 110/120 volt, 60Hz. Do not use this product in conjunction with any variable wall control. Incorrect wire connection can damage this receiver.

CAUTION: If other fan wires are a different color, have this unit installed by a licensed electrician.

CAUTION: Do not install the receiver in a damp location or immerse in water (For indoor use only). Do not pull on or cut the receiver leads shorter. Do not drop or bump the unit.

- ☐ Position the house supply wires (AAA) to one side of the slide-on mounting bracket (A); position the fan wires (BBB) to the opposite side.
- ☐ Insert the narrow end of the receiver (J) (as shown, flat side towards the ceiling) into the slide-on mounting bracket until it rests on top of the ball/downrod assembly.

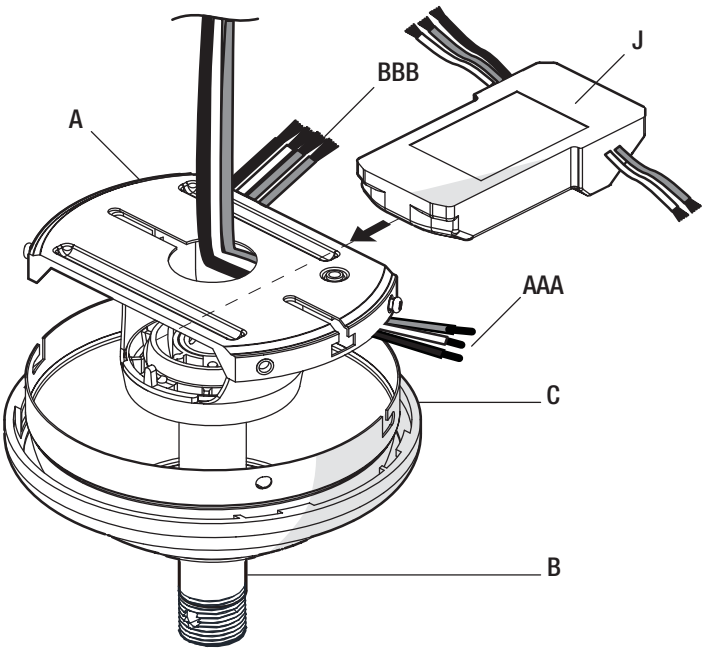

7 Wiring the receiver to the household wiring

WARNING: To avoid possible electrical shock, turn the electricity off at the main fuse box before wiring. If you feel you do not have enough electrical wiring knowledge or experience, contact a licensed electrician.

WARNING: Each wire not supplied with this fan is designed to accept up to one 12-gauge house wire and two wires from the fan. If you have larger than 12-gauge house wiring or more than one house wire to connect to the fan wiring, consult an electrician for the proper size wire nuts to use.

IMPORTANT: Use the wire connecting nuts (BB) supplied with your fan. Secure the connectors with electrical tape and ensure there are no loose strands or connections.

- ☐ Spread the wires apart so that the green and white wires are on one side of the outlet box and the black wire is on the other side.
- ☐ Connect the green fan wires to the household ground wire (this may be a green or bare wire) using a wire connecting nut (BB).
- ☐ Connect the receiver black (or red) wire to the household black (hot) wire using a wire connecting nut (BB).
- ☐ Connect the receiver white wire to the household white wire (neutral) wire using a wire connecting nut (BB).
- ☐ Secure each wire connecting nut using electrical tape.

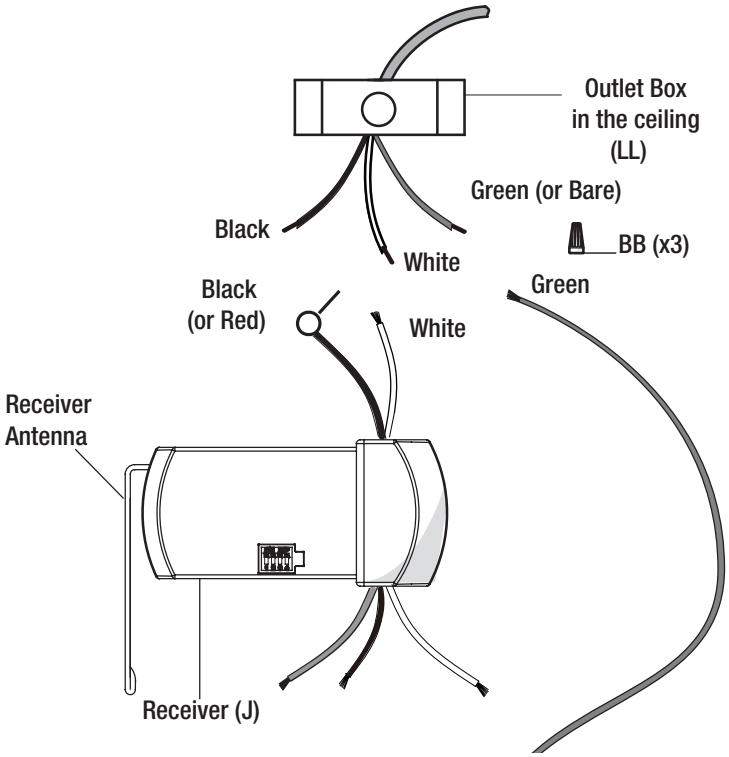

8 Making the electrical connection

WARNING: Each wire not supplied with this fan is designed to accept up to one 12-gauge house wire and two wires from the fan. If you have larger than 12-gauge house wiring or more than one house wire to connect to the fan wiring, consult an electrician for the proper size wire nuts to use.

IMPORTANT: Use the plastic wire connectors (BB) supplied with your fan. Secure the connectors with electrical tape and ensure there are no loose strands or connections.

NOTE: The fan comes with 54 in. lead wires for use with an extended ball/downrod assembly. If using the 4.5 in. ball/downrod assembly (B) provided, you can cut the lead wires to your desired length (no shorter than 12 in.).

- ☐ The fan comes with 54 in. lead wires for use with an extended ball/downrod assembly. If using the 4.5 in. ball/downrod assembly (B) provided, you can cut the lead wires to your desired length (no shorter than 12 in.) This will make extra room in the canopy (C), if you do not wish to cut the wires, you will need to neatly wrap them.
- ☐ Connect the fan motor white wire to the receiver white wire using a wire connecting nut (BB).
- ☐ Connect the fan motor black wire to the receiver black wire using a wire connecting nut (BB).
- ☐ Connect the fan motor blue wire to the receiver blue wire using a wire connecting nut (BB).
- ☐ Secure each wire connecting nut using electrical tape.
- ☐ Turn the wire connecting nut (BB) upward and push the wiring into the outlet box (LL).

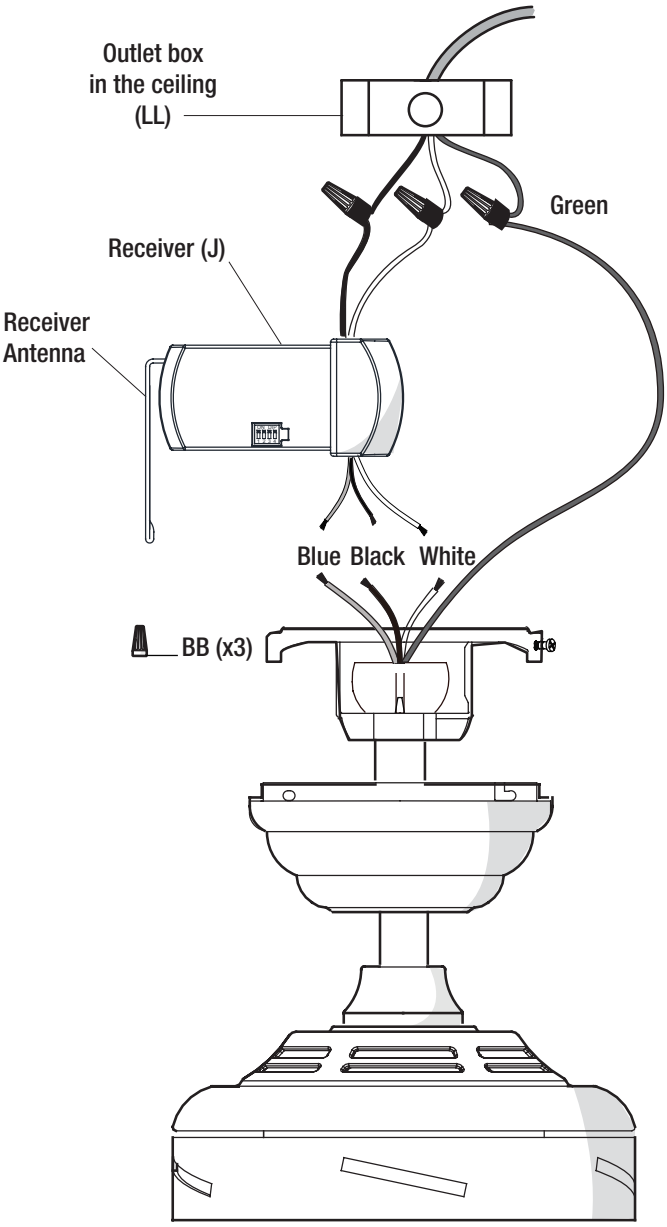

9 Wrapping the extra wire

NOTE: Follow this step ONLY if you did not cut the extra length off from the wires coming from the ceiling fan to the receiver.

- ☐ Gently wrap the excess wire around the mounting bracket, under the receiver.
- ☐ Secure with electrical tape.

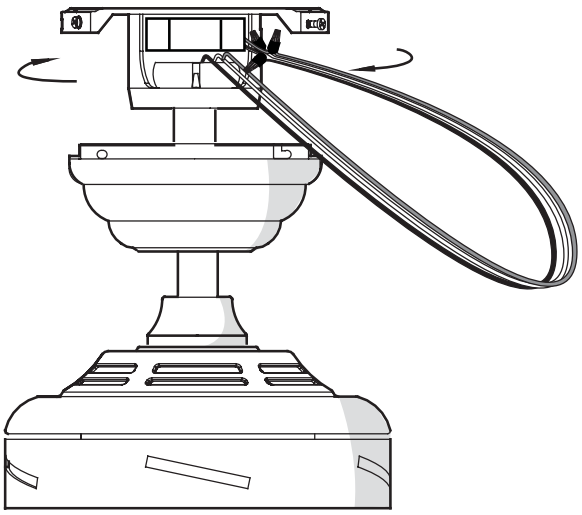

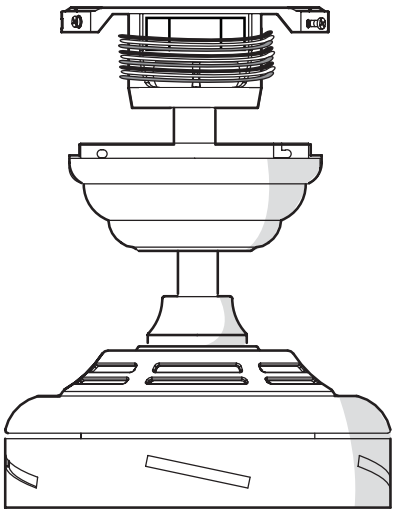

10 Mounting the fan

WARNING: When using the standard ball/downrod mounting, the tab in the ring at the bottom of the mounting bracket must rest in the groove of the hanger ball. Failure to properly seat the tab in the groove could cause damage to the wiring.

- ☐ Align the locking slots of the ceiling canopy (C) with the two screws in the mounting bracket (A). Push up to engage the slots and turn clockwise to lock in place.
- ☐ Firmly tighten the two mounting screws.
- ☐ Install the two mounting screws (saved from Assembly Step 1 “Prepairing for mounting”) into the holes in the canopy (C) and tighten firmly.
- ☐ Install the decorative canopy ring (FF) by aligning the ring’s slots with the screws in the canopy (C). Rotate the ring clockwise to lock in place.

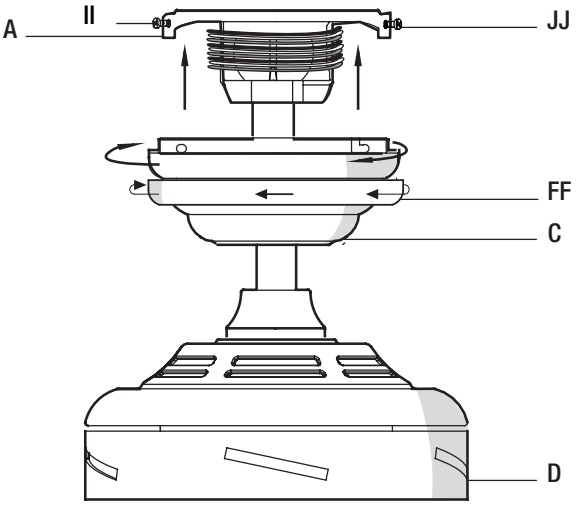

11 Close-to-Ceiling mounting

WARNING: The locking slots of the celling canopy are provided only as an aid to mounting. Do not leave the fan assembly unattended until all four canopy screws are engaged and firmly tightened.

- ☐ Carefully unhook the fan from the mounting bracket (A) and align the locking slots of the ceiling canopy (C) with the two screws in the mounting bracket (A). Push up to engage the slots and turn clockwise to lock the canopy (C) in place. Immediately tighten the two mounting screws (JJ) firmly.
- ☐ Install the remaining two mounting screws (II) into the holes in the canopy (C) and tighten firmly.
- ☐ Install the decorative canopy ring (FF) by aligning the ring's slots with the screws in the canopy (C). Rotate the ring counter-clockwise to lock it in place.

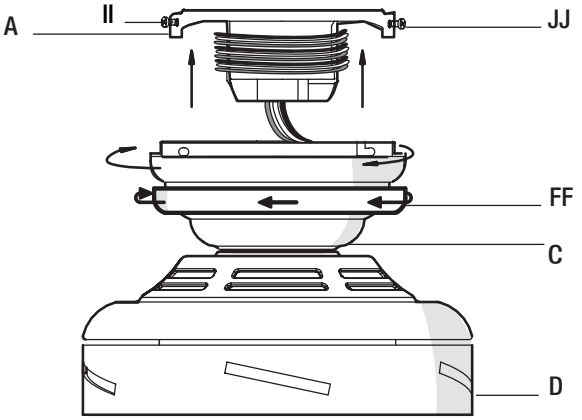

12 Attaching the fan blades

- ☐ Attach a blade (G) to the fan motor housing (D) by first inserting the blade (G) into the slot in the side of the fan motor housing (D).
- ☐ Insert a screw (AA) into the bracket. Repeat for the two remaining screws.
- ☐ Tighten each screw (AA) securely.
- ☐ Repeat these steps for the remaining blades (G).

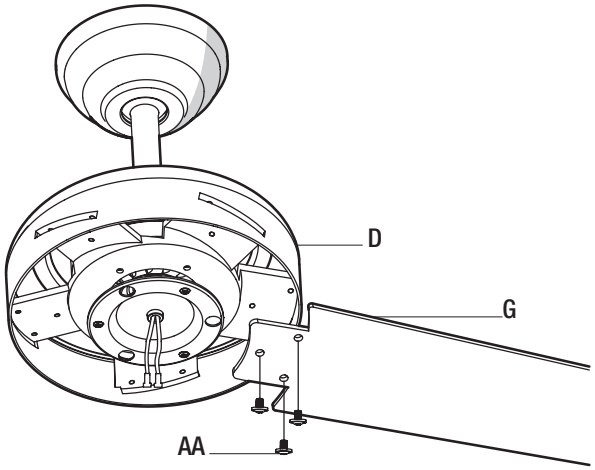

Assembly - Installing the Light Kit

1 Attaching the light kit

CAUTION: To reduce the risk of electric shock, disconnect the electrical supply circuit to the fan before installing the light kit.

- ☐ Remove one screw (N) from the black bracket below the fan motor assembly (D). Loosen, but do not remove the other two screws.
- ☐ Connect the blue wire exiting the bottom of the fan motor assembly (D) with the black wire from the top of the light kit fitter assembly (E).
- ☐ Connect the white wire exiting the bottom of the fan motor assembly (D) with the white wire from the top of the light kit fitter assembly (E).
- ☐ Attach the light kit assembly (E) to the fan motor assembly (D) by securing with the two screws loosened in first step. Push the light kit assembly (E) up to engage the screw heads in the screw slots and turn to secure. Tighten each screw firmly.

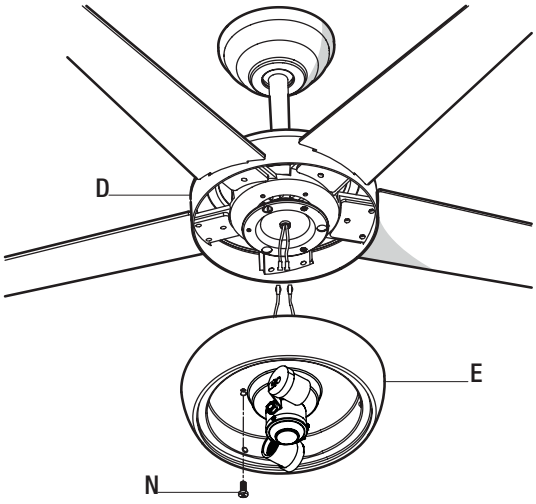

2 Installing the Light bulbs

WARNING: Do not overtighten when installing the glass shade into the light kit assembly. Allow the glass shade to cool completely before removing.

- ☐ With the power off, install the two fluorescent bulbs (I) (Max. 13W, provided) into the light bulb sockets.
- ☐ Place the glass bowl (H) into the light kit assembly (E), aligning the three flat areas on the top flange of the glass bowl (H) with the three raised dimples in the light kit assembly. Turn the glass bowl (H) clockwise until it stops.

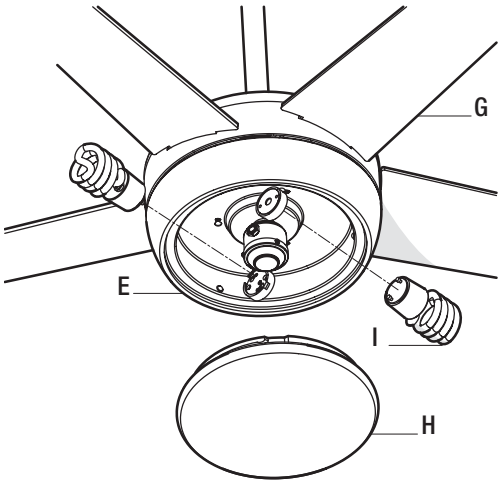

CAUTION: Over lamping the fan will result in the fan lights shutting down until the proper wattage of bulbs are installed. Reset the lights by turning off the light and replacing the bulbs with the correct wattage bulbs

Operation

CAUTION: This device complies with part 15 of the FCC rules. Changes or modifications not expressly approved by the manufacturer could void your authority to operate this equipment.

Remote Control - Your fan is equipped with a remote control to operate the speed and lights of your new ceiling fan.

The appropriate speed settings for warm or cool weather depends on factors such as the room size, ceiling height, and number of fans.

NOTE: The reverse switch is located at the top of motor housing. Shut the fan off then wait until the blades have completely stopped before flipping the switch to reverse the direction of your ceiling fan.

Warm weather - (Forward) A downward airflow creates a cooling effect. This allows you to set your air conditioner on a warmer setting without affecting your comfort.

Cool weather - (Reverse) An upward airflow moves warm air off of the ceiling. This allows you to set your heating unit on a cooler setting without affecting your comfort.

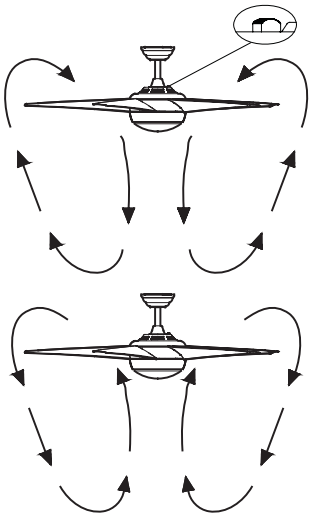

Remote Operation

1 Operating the remote control

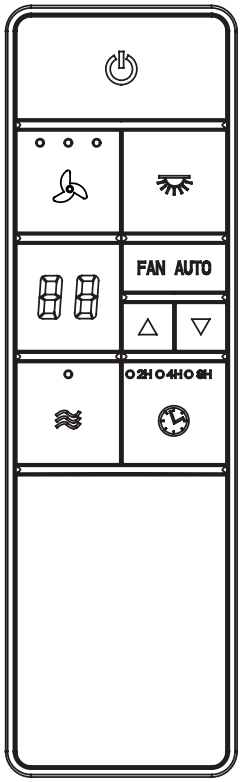

⏻ - Press and release the ⏻ button to turn the fan and the lights on or off.

□ Press and hold the ⏻ button for 3 seconds to use the "walk away time delay"; this will activate the light for 30 seconds (if you are using dimmable bulbs the light will be activated at 50% brightness).

- Press and release 1 time - turns the fan on high speed.

- Press and release 2 times - turns the fan on medium speed.

- Press and release 3 times - turns the fan on low speed.

- Press and release 4 times - turns the fan off.

≋ - Press and hold this button for 3 seconds to enable Comfort Breeze™; this will change your fan speed randomly, simulating a relaxing breeze. To cancel this feature press or ⏻.

- While the fan is on press 1 time - turns on a 2 hour run timer.

- While the fan is on press 2 times - turns on a 4 hour run timer.

- While the fan is on press 3 times - turns on an 8 hour run timer.

FAN AUTO - This setting allows the fan to automatically turn on and off at a previously set room temperature.

△ - Press 1 time to adjust the set temperature + 1°, press and hold to raise the set temperature multiple degrees.

▽ - Press 1 time to adjust the set temperature - 1°, press and hold to lower the set temperature multiple degrees.

- Digital display shows the set temperature when △ or ▽ is pressed.

- Press and release the button to turn the light on or off.

If you are using dimmable bulbs and you have previously set O/D dip switch in your remote to the "D" position, press and hold the button to activate the dimmer function.

Care and Cleaning

WARNING: Make sure the power is off before cleaning your fan.

- Because of the fan's natural movement, some connections may become loose. Check the support connections, brackets, and blade attachments twice a year. Make sure they are secure. It is not necessary to remove the fan from the ceiling.
- Clean your fan periodically to help maintain its new appearance over the years. Do not use water when cleaning, as this could damage the motor, or the wood, or possibly cause an electrical shock. Use only a soft brush or lint-free cloth to avoid scratching the finish. The plating is sealed with a lacquer to minimize discoloration or tarnishing.
- You can apply a light coat of furniture polish to the wood for additional protection and enhanced beauty. Cover small scratches with a light application of shoe polish.
- You do not need to oil your fan. The motor has permanently-lubricated sealed ball bearings.

Troubleshooting

Problem	Solution
The fan will not start	□ Check the main and branch circuit fuses or breakers. □ Check the line wire connections to the fan and switch wire connections in the switch housing. □ Check the battery in the remote control. □ Ensure you are in the normal range of 10-20 feet. □ Turn the power off and ensure that the dip switch settings are the same on the remote control and receiver.
The fan is noisy	□ Ensure all motor housing screws are snug. □ Ensure the screws that attach the fan blade bracket to the motor hub are tight. □ Ensure the wire nut connections are not rattling against each other or the interior wall of the switch housing. □ Allow a 24-hour "breaking in" period. Most noises associated with a new fan disappear during this time. □ If you are using the Ceiling Fan light kit, ensure the screws securing the glassware are tight. Check that the light bulbs are also secure. □ Ensure the canopy is a short distance from the ceiling. It should not touch the ceiling. □ Ensure your outlet box is secure and rubber isolator pads were used between the mounting plate and outlet box.
The fan wobbles	□ Check that all blade and blade arm screws are secure. □ Most fan wobble problems are caused when blade levels are unequal. Check this level by selecting a point on the ceiling above the tip of one of the blades. Measure from a point on the center of the blade to the point on the ceiling. Rotate the fan until the next blade is positioned for measurement, and measure from the same point on each blade to the ceiling. Repeat for each blade. Any measurement deviation should be within 1/8 in. Run the fan for ten minutes. If the fan continues to wobble please contact Hampton Bay Customer Service and a balancing kit will be sent to you at no charge.

HOME
DECORATORS
COLLECTION

Questions, problems, missing parts? Before returning to the store,
call Home Depot Customer Service
8 a.m. - 6 p.m., EST, Monday-Friday

1-800-986-3460

HOMEDEPOT.COM/HOMEDECORATORS

Retain this manual for future use.