HOME
DECORATORS
COLLECTION

Item # 1001 029 135
Model # 51556
ETL Model # 56-BRM

USE AND CARE GUIDE

BREEZEMORE 56-INCH CEILING FAN

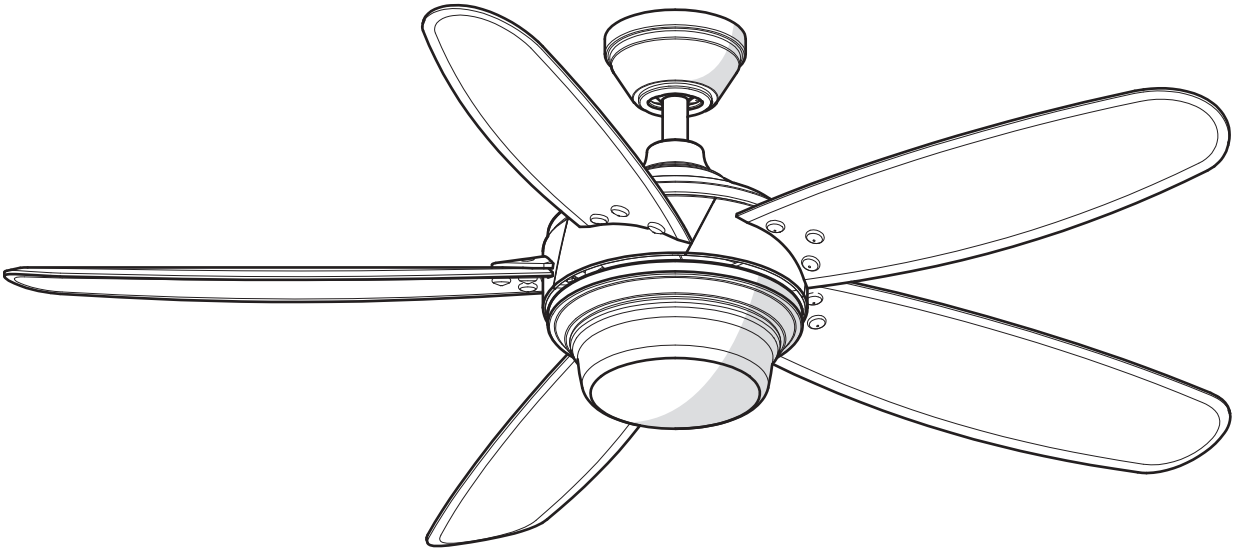

Questions, problems, missing parts? Before returning to the store,
call Home Decorators Collection Customer Service
8 a.m. - 6 p.m., EST, Monday-Friday.

1-800-986-3460

HOMEDEPOT.COM/HOMEDECORATORS

THANK YOU

We appreciate the trust and confidence you have placed in Home Decorators Collection through the purchase of this ceiling fan. We strive to continually create quality products designed to enhance your home. Visit us online to see our full line of products available for your home improvement needs. Thank you for choosing Home Decorators Collection!

Table of Contents

Table of Contents 2

Safety Information 2

Warranty 3

Pre-Installation 3

Installation 6

Assembly 7

Operation 13

Care and Cleaning 16

Troubleshooting 16

Safety Information

READ AND SAVE THESE INSTRUCTIONS.

1. To reduce the risk of electric shock, ensure the electricity has been turned off at the circuit breaker or fuse box before you begin.
2. All wiring must be in accordance with the National Electrical Code ANSI/NFPA 70-1999 and local electrical codes. Electrical installation should be performed by a qualified licensed electrician.
3. The outlet box and support structure must be securely mounted and capable of reliably supporting a minimum of 35 lbs. (15.9 kg). Use only UL-listed outlet boxes marked “Acceptable for Fan Support of 35 lbs. (15.9 kg) or less.”
4. The fan must be mounted with a minimum of 7 ft (2.1 m) of clearance from the trailing edge of the blades to the floor.
5. Do not place objects in the path of the blades.
6. To avoid personal injury or damage to the fan and other items, use caution when working around or cleaning the fan.
7. After making electrical connections, spliced conductors should be turned upward and pushed carefully up into the outlet box. The wires should be spread apart with the grounded conductor and the equipment-grounding conductor on one side of the outlet box.
8. All set screws must be checked and retightened where necessary before installation.

WARNING: To reduce the risk of personal injury, do not bend the blade brackets (also referred to as flanges) during assembly or after installation. Do not insert objects in the path of the blades.

WARNING: To reduce the risk of fire or electric shock, do not use this fan with any solid-state speed control device.

WARNING: To avoid possible electrical shock, turn the electricity off at the main fuse box before wiring. If you feel you do not have enough electrical wiring knowledge or experience, contact a licensed electrician.

WARNING: To reduce the risk of fire, electric shock or personal injury, mount to outlet box marked “Acceptable for fan support of 35 lbs. (15.9 kg) or less”, and use screws provided with the outlet box.

WARNING: Electrical diagrams are for reference only. If you are using a light kit, refer to the light kit instructions manual to make the electrical connections. Optional use of any light kit shall be UL-listed and marked suitable for use with this fan.

WARNING: To reduce the risk of fire or electric shock, this fan should only be used with fan speed control part no. RH786NR, manufactured by Rhine Electronic Co., LTD.

CAUTION: To reduce the risk of personal injury, use only the screws provided with the outlet box.

CAUTION: Changes or modifications not expressly approved by the party responsible for compliance could void the user’s authority to operate the equipment.

This device complies with part 15 of the FCC rules, operation is subject to the following two conditions. (1) this device may not cause harmful interference and (2) this device must accept any interference received, including interference that may cause undesired operation.

Warranty

The supplier warrants the fan motor to be free from defects in workmanship and material present at time of shipment from the factory for a lifetime after the date of purchase by the original purchaser. The supplier also warrants that all other fan parts, excluding any glass or acrylic blades, to be free from defects in workmanship and material at the time of shipment from the factory for a period of two years after the date of purchase by the original purchaser. We agree to correct such defects without charge or at our option replace with a comparable or superior model if the product is returned. To obtain warranty service, you must present a copy of the receipt as proof of purchase. All costs of removing and reinstalling the product are your responsibility. Damage to any part such as by accident or misuse or improper installation or by affixing any accessories, is not covered by this warranty. Because of varying climatic conditions this warranty does not cover any changes in brass finish, including rusting, pitting, corroding, tarnishing, or peeling. Brass finishes of this type give their longest useful life when protected from varying weather conditions. A certain amount of “wobble” is normal and should not be considered a defect. Servicing performed by unauthorized persons shall render the warranty invalid. There is no other express warranty. Home Decorators Collection hereby disclaims any and all warranties, including but not limited to those of merchantability and fitness for a particular purpose to the extent permitted by law. The duration of any implied warranty which cannot be disclaimed is limited to the time period as specified in the express warranty. Some states do not allow a limitation on how long an implied warranty lasts, so the above limitation may not apply to you. The retailer shall not be liable for incidental, consequential, or special damages arising out of or in connection with product use or performance except as may otherwise be accorded by law. Some states do not allow the exclusion of incidental or consequential damages, so the above exclusion or limitation may not apply to you. This warranty gives specific legal rights, and you may also have other rights which vary from state to state. This warranty supersedes all prior warranties. Shipping costs for any return of product as part of a claim on the warranty must be paid by the customer.

Contact the Customer Service Team at 1-800-986-3460 or visit www.HomeDepot.com/homedecorators.

Pre-Installation

SPECIFICATIONS

Size	Speed	Volts	Fan Power Consumption (without lights) WATT	Airflow CFM	Airflow Efficiency (Higher Is Better) CFM/WATT	Net Weight	Gross Weight	Cubic Feet
56 in.	1	120	1	1878	1878	20.28 lbs (9.2 kgs)	24.25 lbs (11 kgs)	3.08 cu.ft.
	2		2	2614	1307			
	3		3	3422	1141			
	4		5	4329	866			
	5		8	5061	633			
	6		13	5869	451			
	7		22	7100	323			
	8		28	7503	268			
	9		35	8201	234			

NOTE: These are approximate measures. They do not include the Amps and Wattage used by the light kit.

TOOLS REQUIRED

Phillips screwdriver

Flat blade screwdriver

Adjustable wrench

Electrical tape

Wire cutter / Stripper

Step ladder

HARDWARE INCLUDED

NOTE: Hardware not shown to actual size.

NOTE: Hardware should be packaged in a blister pack.

AA

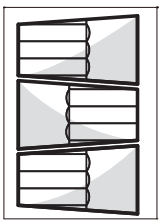
BB

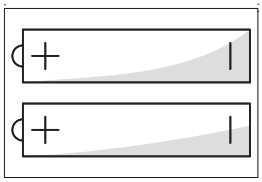

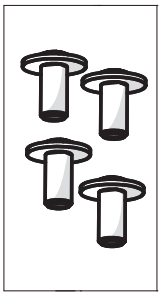
CC

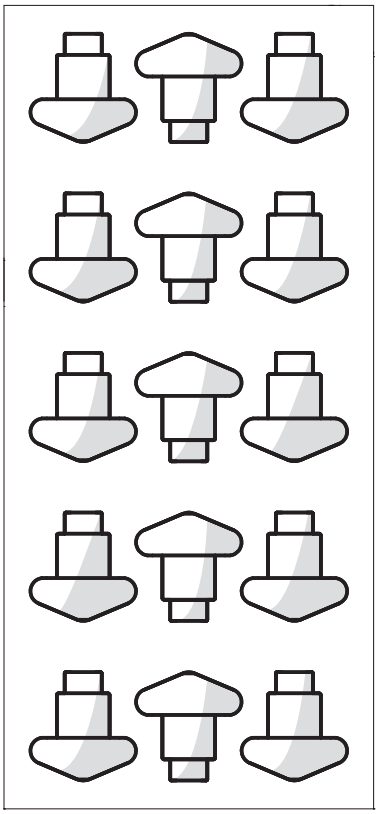
DD

Part	Description	Quantity
AA	Transmitter (battery included)	1
BB	Plastic wire connecting nut	3

Part	Description	Quantity
CC	Blade attachment screws	15
DD	Decorative nut	15

PACKAGE CONTENTS

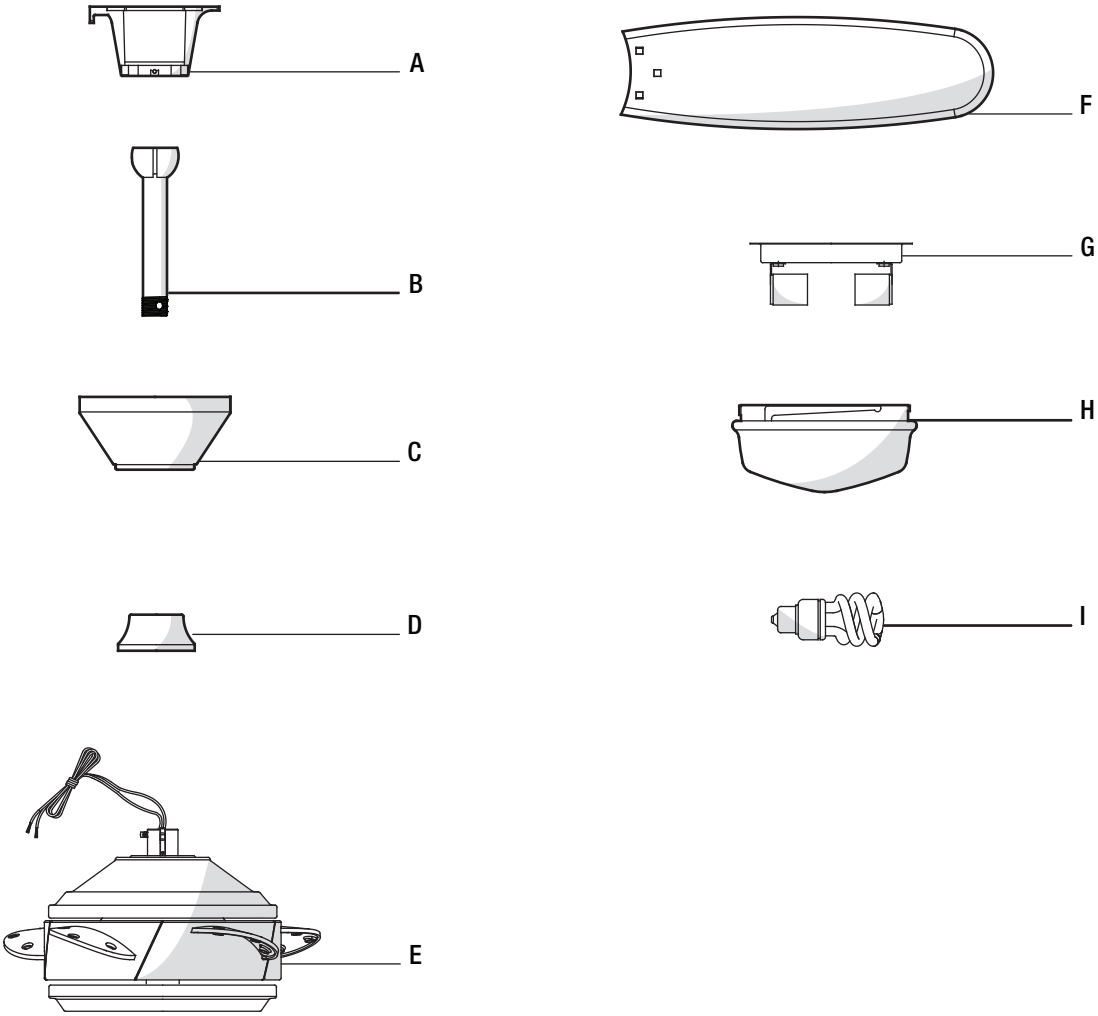

Part	Description	Quantity
A	Slide-on mounting bracket (inside canopy)	1
B	Ball/downrod assembly	1
C	Canopy	1
D	Decorative motor collar cover	1

Part	Description	Quantity
E	Fan-motor assembly with light kit pan pre-attached	1
F	Blade	5
G	Light kit fitter assembly	1
H	Glass bowl	1
I	Light bulbs	2

IMPORTANT: This product and/or components are governed by one or more of the following U.S. Patents: 5,947,436; 5,988,580; 6,010,110; 6,046,416, 6,210,117 and other patents pending.

MOUNTING OPTIONS

WARNING: To reduce the risk of fire, electric shock or personal injury, mount to outlet box marked "Acceptable for fan support of 35 lbs. (15.9 Kg) or less", and use screws provided with the outlet box. An outlet box commonly used for the support of lighting fixtures may not be acceptable for fan support and may need to be replaced. If in doubt, consult a qualified electrician.

If your ceiling fan does not have an existing UL-listed mounting box, then install one using the following instructions:

- ☐ Disconnect the power by removing the fuses or turning off the circuit breakers.
- ☐ Secure the outlet box directly to the building structure. Use the appropriate fasteners and materials. The outlet box and support structure must be securely mounted and capable of reliably supporting a minimum of 35 lbs. (15.9kg). Use only UL-listed outlet boxes marked "Acceptable for fan support of 35 lbs. (15.9 Kg) or less" Do not use a plastic outlet box.

The illustrations below show three different ways to mount the outlet box.

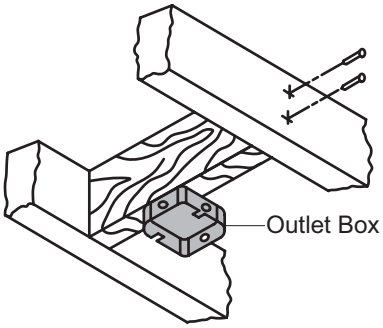

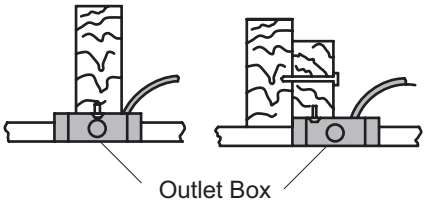

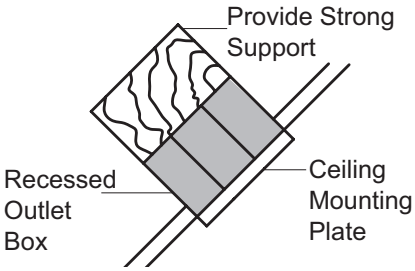

NOTE: You may need a longer downrod to maintain proper blade clearance when installing on a steep, sloped ceiling. The maximum angle allowable is 30° away from horizontal.

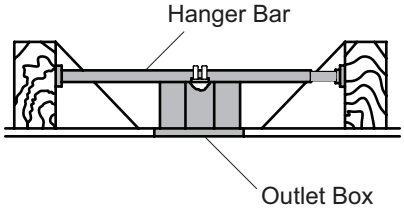

If the canopy touches the downrod, then remove the decorative canopy bottom cover, and turn the canopy 180° before attaching the canopy to the mounting plate.

To hang your fan where there is an existing fixture but no ceiling joist, you may need an installation hanger bar as shown above (available at any Home Depot store).

Assembly - Standard Ceiling Mount

1 Preparing for mounting

- ☐ Remove the canopy bottom cover (J) from the canopy (C) by turning the bottom cover counterclockwise until it unlocks.
- ☐ Loosen the two canopy screws (EE) located in the bottom of the mounting bracket, and turn the canopy counterclockwise to remove the mounting bracket (A) from the canopy (C).

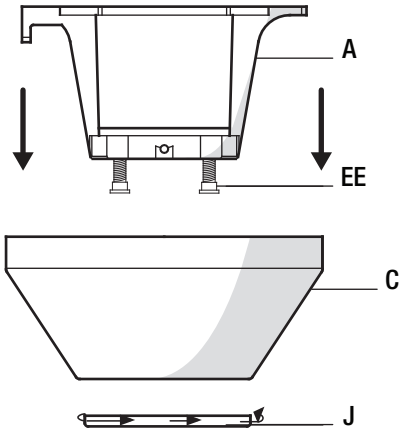

2 Routing the wires

- ☐ Route the wires exiting the top of the fan-motor assembly (E) through the center of the canopy bottom cover (J).
- ☐ Insert the ball/downrod (B) through the canopy (C) and slide the decorative motor collar cover (D) onto the end of the ball/downrod (B). Make sure the slots on the canopy (C) are on top.
- ☐ Route the wires exiting the top of the fan motor assembly (E) through the downrod as shown.

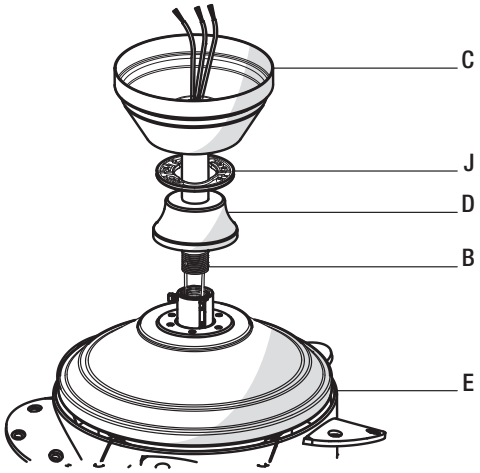

3 Assembling the fan

CAUTION: To ensure wobble-free operation and to avoid damage to the fan, the downrod (B) and the setscrew (FF) must be completely tightened

NOTE: This fan is equipped with a safety tab (HH). Should the setscrew (FF) ever become loose while the fan is running in reverse, the safety tab (HH) will engage and stop the fan from falling.

- ☐ Remove the setscrew (FF) by turning it counterclockwise.
- ☐ Install the downrod (B) by inserting it into the motor collar (K), and turning it clockwise until it is tight.
- ☐ Reinstall the setscrew (FF) turning clockwise until tight.

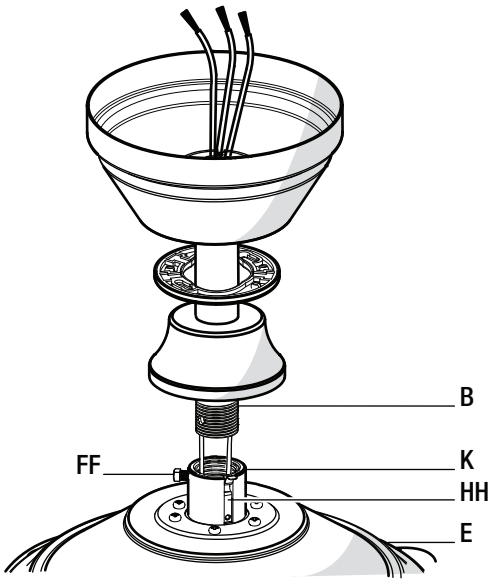

Assembly - Hanging the Fan

1 Attaching the fan to the electrical box

WARNING: To reduce the risk of fire, electric shock or personal injury, mount to outlet box marked “Acceptable for fan support of 35 lbs. 15.9 kg) or less”, and use screws provided with the outlet box.

NOTE: The mounting bracket (A) is designed to slide into place on an outlet box with the outlet box screws (GG) installed.

- ☐ Loosen the two outlet box screws (GG) in the outlet box.
- ☐ Pass the 120-Volt supply wires through the center hole in the mounting bracket (A).
- ☐ Slide the mounting bracket (A) on to the outlet box screws (GG) and center the mounting bracket (A) in relation to the outlet box. If necessary, use leveling washers (not included) between the slide-on mounting bracket (A) and the outlet box. The flat side of the slide-on mounting bracket (A) should face toward the outlet box, as shown.
- ☐ Securely tighten the two outlet box screws (GG).

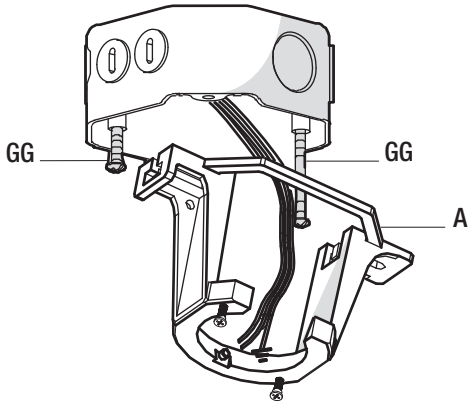

2 Hanging the fan

- ☐ Carefully lift the fan-motor assembly (E) up to the slide-on mounting bracket (A).
- ☐ Insert the ball portion of the ball/downrod assembly into the socket of the slide-on mounting bracket (A).
- ☐ Turn the ball/downrod assembly clockwise until it is seated with the tab of the slide-on mounting bracket (A) aligned with the slot in the ball.

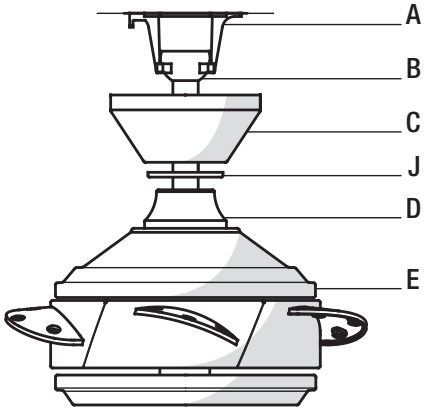

3 Making the electrical connection

WARNING: Each wire not supplied with this fan is designed to accept up to one 12-gauge house wire and two wires from the fan. If you have larger than 12-gauge house wiring or more than one house wire to connect to the fan wiring, consult an electrician for the proper size wire nuts to use.

WARNING: Remove the rubber motor stops on the bottom of the fan before installing the blades or testing the motor.

IMPORTANT: Use the plastic wire connectors (BB) supplied with your fan. Secure the connectors with electrical tape and ensure there are no loose strands or connections.

NOTE: The fan comes with 78 in. lead wires for use with an extended ball/ downrod assembly. If using the 4.5 in. ball/downrod assembly (B) provided, you can cut the lead wires to your desired length (no shorter than 12 in.)

- ☐ The fan comes with 78 in. lead wires for use with an extended ball/ downrod assembly. If using the 4.5 in. ball/downrod assembly (B) provided, you can cut the lead wires to your desired length (no shorter than 12 in.). This will make extra room in the canopy (C), if you do not wish to cut the wires, you will need to neatly wrap them.
- ☐ Connect the fan motor green wires to the household green or bare wire using a wire connecting nut (BB).
- ☐ Connect the fan motor white wires to the household white wire using a wire connecting nut (BB).
- ☐ Connect the fan motor black wires to the household black wire using a wire connecting nut (BB).
- ☐ Secure each wire connecting nut using electrical tape.
- ☐ Turn the wire connecting nut (BB) upward and push the wiring into the outlet box (II).

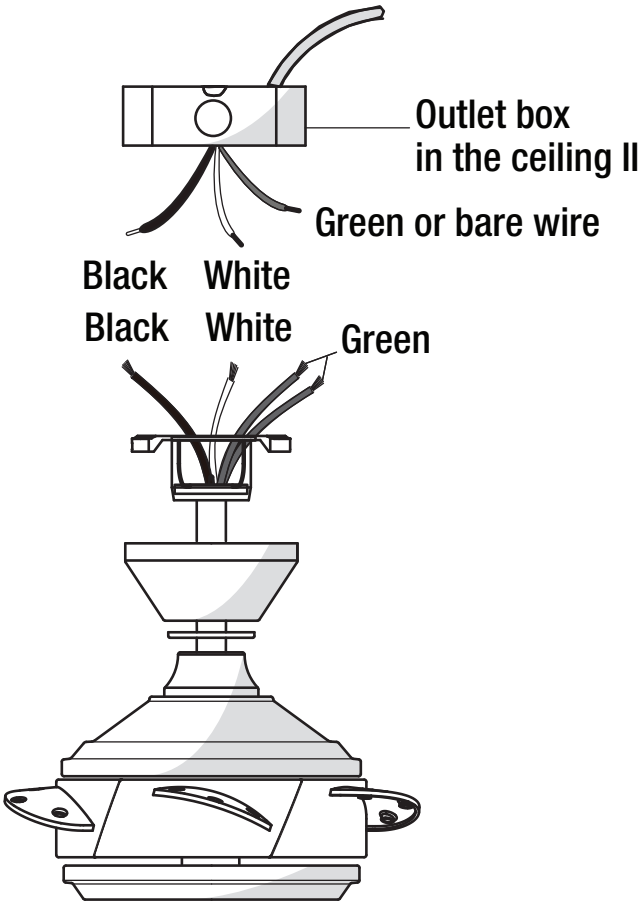

4 Wrapping the extra wire

NOTE: Follow this step ONLY if you did not cut the extra length off from the wires coming from the ceiling fan.

- ☐ Gently wrap the excess wire around the mounting bracket.
- ☐ Secure with electrical tape.

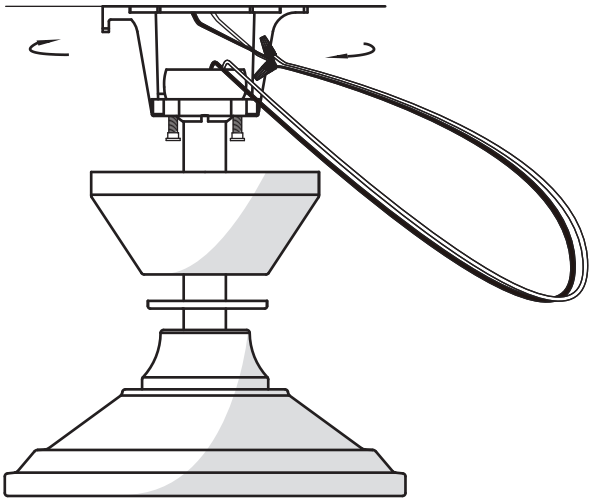

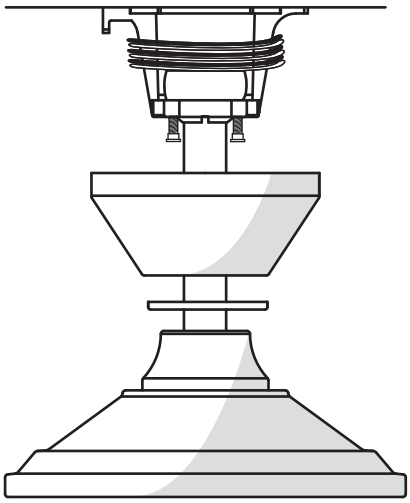

5 Mounting the fan-motor assembly (standard mount)

WARNING: When using the standard ball/downrod mounting, the tab in the ring at the bottom of the mounting bracket must rest in the groove of the hanger ball. Failure to properly seat the tab in the groove could cause damage to the wiring.

- ☐ Align the locking slots of the canopy with two screws (EE) in the mounting bracket (A). Push up to engage the slots and turn clockwise to lock in place.
- ☐ Firmly tighten the two screws (EE).
- ☐ Install the decorative bottom cover (J) by aligning the cover's slots with the screws in the bottom of the canopy (C). Rotate the bottom cover clockwise to lock in place.

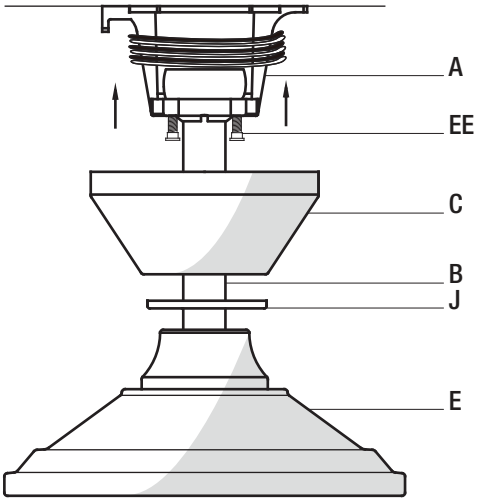

6 Attaching the fan blades

- ☐ Attach a blade (F) to blade bracket (L) using the decorative nuts (DD) and blade attachment screws (CC) provided. Insert a blade attachment screw (CC) through a hole in the blade (F) and the blade bracket (L) and into the decorative nut (DD). Repeat for the two remaining holes in the blade (F).
- ☐ Tighten each screw (CC) securely.
- ☐ Repeat these steps for the remaining blades.

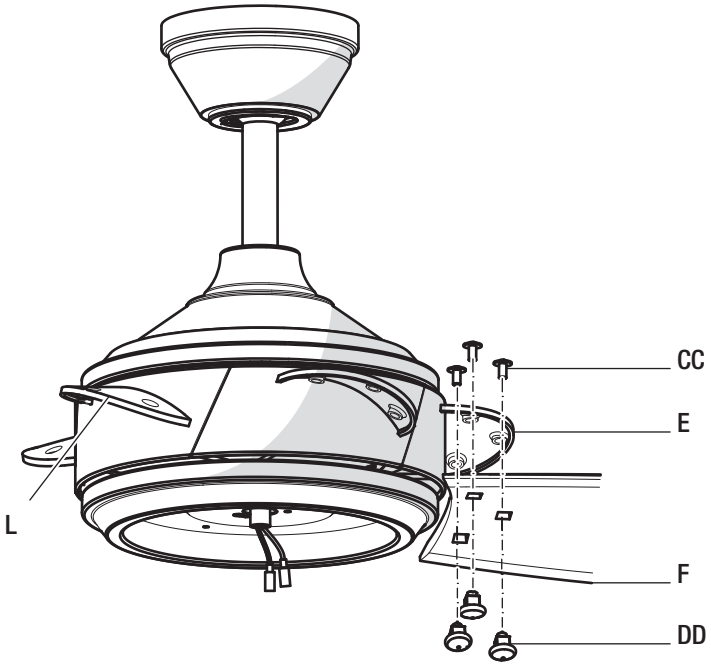

7 Attaching the light kit fitter assembly

CAUTION: To reduce the risk of electric shock, disconnect the electrical supply circuit to the fan before installing the light kit.

- ☐ To attach the light kit fitter assembly (G), remove on screw (JJ) from the light kit pan (pre-installed), and loosen, but do not remove the other two screws.
- ☐ Connect the blue wire existing the bottom of the fan motor assembly (E) with the black wire from the top of the light kit fitter assembly (G).
- ☐ Connect the white wire existing the bottom of the fan motor assembly (E) with the white wire from the top of the light kit fitter assembly (E)
- ☐ Push the light kit fitter assembly (G) up to the light kit pan (pre-installed) so that the two loosened screw heads fit into the keyhole slots. Turn the light kit fitter assembly (G) to secure.
- ☐ Re-install the screw that was removed in step 1.
- ☐ Make sure all the screws are firmly tightened.

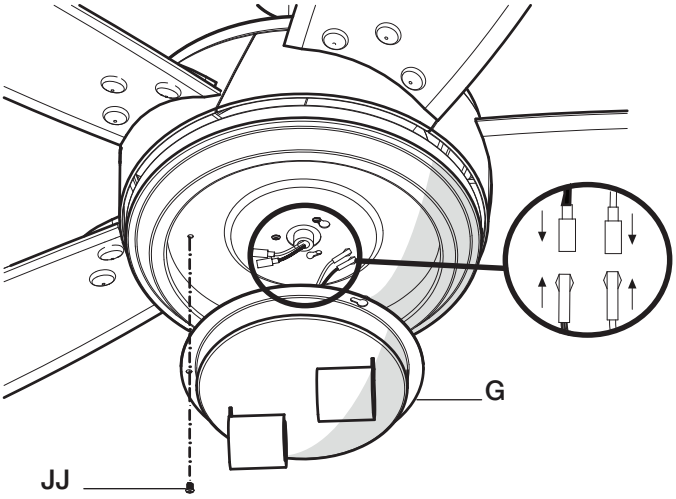

1 Installing the bulbs and glass bowl

WARNING: Do not overtighten when installing the shade into the light kit. Allow the shade to cool completely before removing.

CAUTION: Over lamping the fan will result in the fan lights shutting down until the proper wattage of bulbs are installed. Reset the lights by turning off the light and replacing the bulbs with the correct wattage bulbs.

- ☐ With the power off, install the two fluoresecent bulbs (I) (Max. 14W, included) by screwing into the light bulb sockets.
- ☐ Place the glass bowl (H) into the light kit assembly, aligning the three flat areas on the top flange of the glass bowl (H) with the three raised dimples in the light kit assembly. Turn the glass bowl (H) clockwise until it stops.

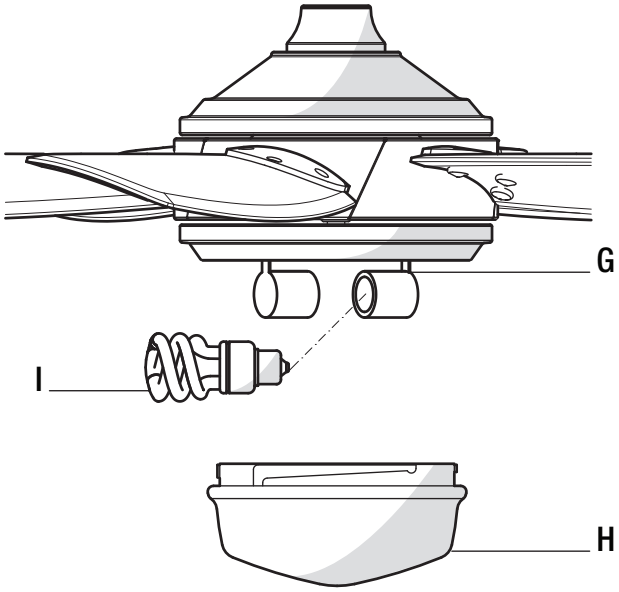

Operating Your Fan and Remote Control

Setting the code on the transmitter

NOTE: The battery will weaken with age and should be replaced before leaking takes place as this will damage the remote control. Dispose of used battery properly and keep the battery out of the reach of children.

NOTE: The switch marked ON/DIM controls the dimming function of the lights. If using non-dimmable bulbs, use a ballpoint pen or small screwdriver to set the switch to ON to disable the dimming function. If using dimmable bulbs, set the switch to DIM to enable the dimming function.

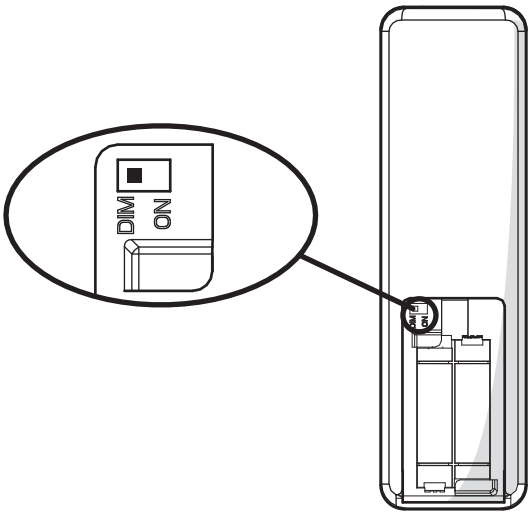

- ☐ Remove the battery cover by pressing firmly on the arrow and sliding the cover off.
- ☐ Install two 1.5V AAA batteries (included).
- ☐ Replace the battery cover on the remote control.

Learning process

NOTE: After the AC power is on, do not press any other button on the remote control before pressing the "FAN OFF" button. Doing so will cause the procedure to fail.

NOTE: The remote control can learn multiple receivers. Make sure no other receivers are operating during the learning process. Separate the fan power switches by approximately 2 meters.

Should you desire to use another remote control unit with your new fan, install one using the steps below:

- ☐ Turn the main power source off to begin the learning process.
- ☐ Return the power to the unit.
- ☐ Within 30 seconds of turning the fan's AC power ON, Press and hold the ⏻ button for 5 seconds to enter the learning function. Once the receiver has detected the set frequency, the down light of your fan, if applicable, will blink twice. There is no indication if your fan is not equipped with a light.

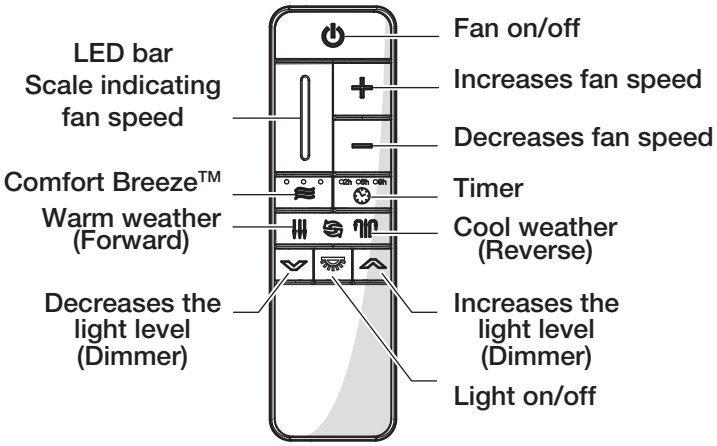

Operating Your Fan and Remote Control

1. Fan ⏻ button. - Press and release the ⏻ button to turn the fan on or off.

- ☐ Press and hold the ⏻ button for 5 seconds to enter the learning function.
- ☐ Fan on. The fan memory function will resume the speed set on the fan prior to the power being turned off. The LED bar will display the current settings for 5 seconds after the button is released.

> Note: If you are currently using Comfort Breeze™ mode, pressing the ⏻ button will cancel Comfort Breeze™ mode and resume normal fan operation.

- ☐ Fan off. The fan memory function will store the current setting for the next time the fan is in use.

> Note: You must turn the fan on prior to using the timer function.

2. Speed functions

+ button, increases the fan speed

- ☐ Pressing and releasing the + button one time will increase the speed of the fan. Each setting increase will cause the LED bar to illuminate slightly more, until the fan has reached the maximum speed setting, at that time the LED bar will be fully illuminated.
- ☐ Pressing and holding the + button will increase the fan speed automatically through the speed settings and the increments will be denoted on the LED bar. When the LED bar is fully illuminated, the fan has reached maximum speed setting.
- ☐ Pressing the + button while in Comfort Breeze™ mode will automatically cancel the Comfort Breeze™ mode and resume normal fan operation.

– button, decreases fan speed

- ☐ Pressing and releasing the - button one time will decrease the speed of the fan. Each setting decrease will cause the LED bar to dim slightly more, until the fan has reached the minimum speed setting. At that time the LED bar will be approximately 25% illuminated.
- ☐ Pressing and holding the - button will decrease the fan speed automatically through the speed settings and the increments will be denoted on the LED bar. When the LED bar is 25% illuminated, the fan has reached the minimum speed setting.
- ☐ Pressing the - button while in Comfort Breeze™ mode will automatically cancel the Comfort Breeze™ mode and resume normal fan operation.

3. Comfort Breeze™ ≋

There are three Comfort Breeze™ settings. Pressing the ≋ button will activate the Comfort Breeze™ mode and LED bar will illuminate slowly from bottom to top to display the current setting.

- ☐ Setting 1: Alternates through speeds 1 – 3, the LED bar should fill approximately 33%.
- ☐ Setting 2: Alternates through speeds 1 – 6, the LED bar should fill approximately 66%.
- ☐ Setting 3: Alternates through speeds 1 – 9, the LED bar should be fully illuminated.

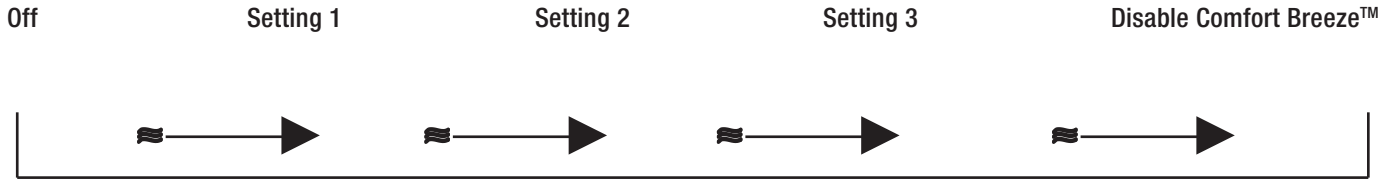

Operating Your Fan and Remote Control

4. Timer

- Pressing the timer button will automatically turn fan and light (if light is on) off after 2, 4, or 8 hours. When you activate the timer mode, the LED to the left of the time above the clock will illuminate.

Off 2H 4H 8H Disables timer

5. Fan reverse button (Must be pushed when the fan is in operation)

- Warm weather: LED bar will illuminate and the lights will flow from high to low.
- Cool weather: LED bar will illuminate and the lights will flow from low to high.

6. Light

- Press and release the light button to turn the light on or off
- Light on: The fan memory function will resume the light setting (on or off and dim) on the fan prior to the power being turned off.

7. Dimmer.

- Press to increase the desired light level.
- Press to decrease the desired light level.

Remote Control - Your fan is equipped with a remote control to operate the speed and lights of your new ceiling fan.

Speed setting for warm or cool weather depend on factors such as the room size, ceiling height, number of fans and so on.

A. Warm weather - (Forward) A downward airflow creates a cooling effect.
This allows you to set your air conditioner on a higher setting without affecting your comfort.

B. Cool weather - (Reverse) An upward airflow moves warm air off of the ceiling. This allows you to set your heating unit on a lower setting without affecting your comfort.

NOTE: Do not wait for the fan to stop before pressing the reverse button. The fan will not reverse direction if the fan is not moving.

A. Warm weather

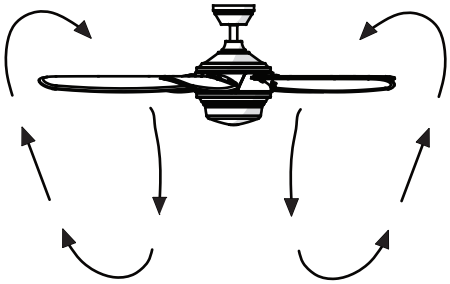

B. Warm weather

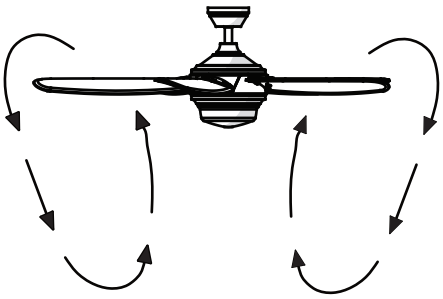

Care and Cleaning

WARNING: Make sure the power is off before cleaning your fan.

- Because of the fan's natural movement, some connections may become loose. Check the support connections, brackets, and blade attachments twice a year. Make sure they are secure. It is not necessary to remove the fan from the ceiling.
- Clean your fan periodically to help maintain its new appearance over the years. Do not use water when cleaning, as this could damage the motor, or the wood, or possibly cause an electrical shock. Use only a soft brush or lint-free cloth to avoid scratching the finish.
- You can apply a light coat of furniture polish to the wood for additional protection and enhanced beauty. Cover small scratches with a light application of shoe polish.
- You do not need to oil your fan. The motor has permanently-lubricated sealed ball bearings.

Troubleshooting

Problem	Solution
The fan will not start.	□ Check the main and branch circuit fuses or breakers. □ Check the line wire connections to the fan and switch wire connections in the switch housing. □ Check the battery in the remote control. □ Ensure you are in the normal range of 10-20 feet. □ Remember to turn off the power supply before checking the dip switch settings.
The fan is noisy.	□ Ensure all motor housing screws are snug. □ Ensure the screws that attach the fan blade bracket to the motor hub are tight. □ Ensure the wire nut connections are not rattling against each other or the interior wall of the switch housing. □ Allow a 24-hour "breaking in" period. Most noises associated with a new fan disappear during this time. □ If you are using the Ceiling Fan light kit, ensure the screws securing the glassware are tight. Check that the light bulbs are also secure. □ Ensure the canopy is a short distance from the ceiling. It should not touch the ceiling. □ Ensure your outlet box is secure and rubber isolator pads were used between the mounting plate and outlet box.
The fan wobbles.	□ Check that all blade and blade arm screws are secure. □ Most fan wobble problems are caused when blade levels are unequal. Check this level by selecting a point on the ceiling above the tip of one of the blades. Measure from a point on the center of the blade to the point on the ceiling. Rotate the fan until the next blade is positioned for measurement, and measure from the same point on each blade to the ceiling. Repeat for each blade. Any measurement deviation should be within 1/8 in. Run the fan for ten minutes. If the fan continues to wobble please contact Customer Service and a balancing kit will be sent to you at no charge.

HOME
DECORATORS
COLLECTION

Questions, problems, missing parts? Before returning to the store,
call Home Depot Customer Service
8 a.m. - 6 p.m., EST, Monday-Friday

1-800-986-3460

HOMEDEPOT.COM/HOMEDECORATORS

Retain this manual for future use.

HOME
DECORATORS
COLLECTION

Artículo núm. 1001 029 135
Modelo núm. 51556
Modelo ETL núm. 56-BRM

GUÍA DE USO Y MANTENIMIENTO

VENTILADOR DE TECHO BREEZEMORE, DE 1.42 M

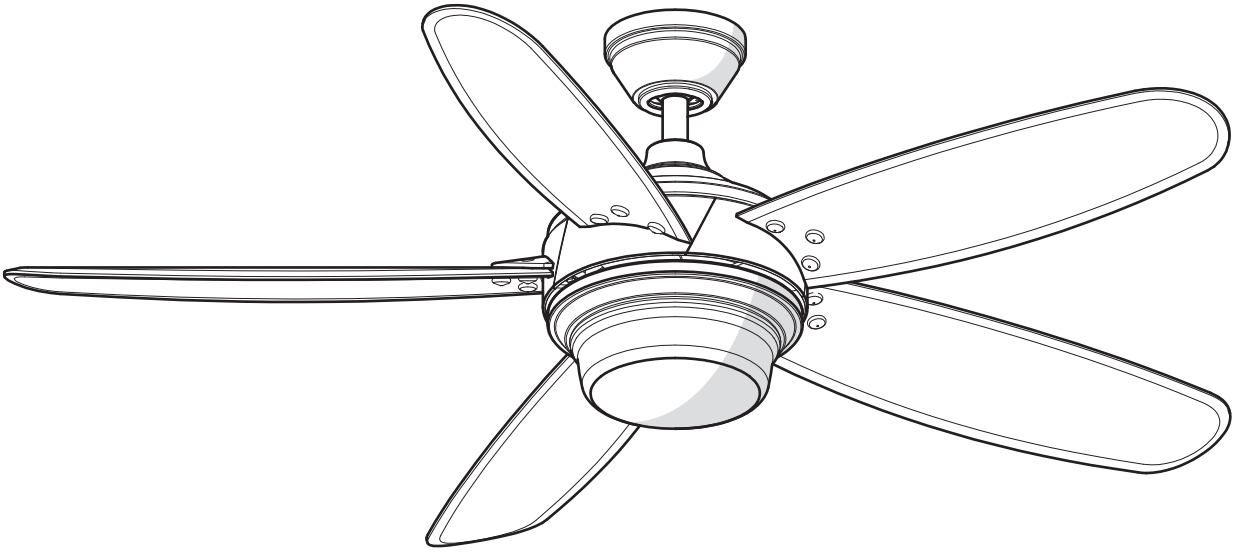

¿Preguntas, problemas o piezas faltantes? Antes de regresar a la tienda,
llama al servicio al cliente de Home Decorators Collection,
de lunes a viernes entre 8 a.m. y 6 p.m. (hora estándar del Este).

1-800-986-3460

HOMEDEPOT.COM/HOMEDECORATORS

GRACIAS POR TU COMPRA

Apreciamos la confianza que has depositado en Home Decorators Collection al comprar este ventilador de techo. Nos esforzamos para continuamente crear productos de calidad diseñados para mejorar tu hogar. Visítanos por Internet para ver nuestra línea completa de productos disponibles para las necesidades de mejoras de tu hogar. ¡Gracias por elegir Home Decorators Collection!