AirPro®

PROGRESS LIGHTING™

Ceiling Fan Installation Manual

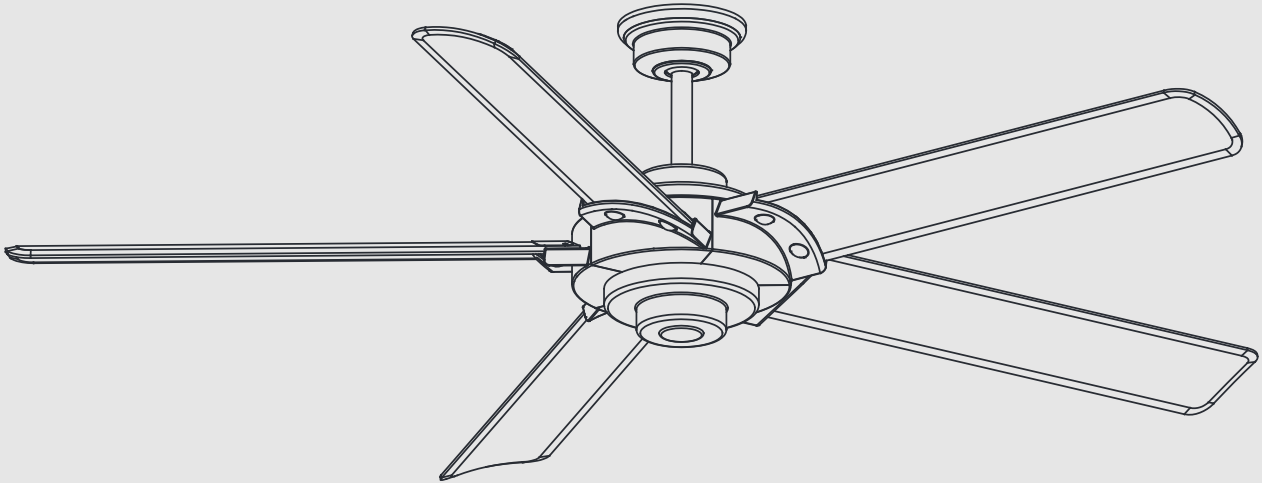

P2546

Limited Lifetime Warranty

Progress Lighting fan motors are warranted to the original purchaser to be free of electrical and/or mechanical defects for so long as the original purchaser owns the fan. Pull chain switches, reverse switches, capacitors and metal finishes are warranted for a period of 1 year. Warping of wooden or plastic blades is not covered by this warranty.

With proof of purchase, the purchaser may return the defective fan to the place of purchase during the first 30 days for replacement. After 30 days, the purchaser MUST contact Progress Lighting for repair or replacement which shall be determined in Progress Lighting's sole discretion and shall be purchaser's sole and exclusive remedy.

Labor and Shipping Excluded. This warranty does not cover any costs or fees associated with the labor (including, but not limited to, electrician's fees) required to install, remove, or replace a fan or any fan parts.

ORIGINAL PURCHASER'S SOLE AND EXCLUSIVE REMEDY FOR A CLAIM OF ANY KIND WITH RESPECT TO THIS PRODUCT SHALL BE THE REMEDIES SET FORTH HEREIN. PROGRESS LIGHTING IS NOT RESPONSIBLE FOR DAMAGES (INCLUDING INDIRECT, SPECIAL, INCIDENTIAL OR CONSEQUENTIAL), DUE TO PRODUCT FAILURE, WHETHER ARISING OUT OF BREACH OF WARRANTY, BREACH OF CONTRACT, OR OTHERWISE. THIS WARRANTY IS GIVEN IN LIEU OF ALL OTHER WARRANTIES, WHETHER EXPRESSED OR IMPLIED, INCLUDING THOSE OF MERCHANTABILITY AND FITNESS FOR ANY PARTICULAR PURPOSE OR AGAINST INFRINGEMENT, AND IS VOIDED IN CASES OF ABUSE, MISUSE OR IMPROPER HANDLING, NEGLIGENCE, SHIPPING DAMAGE, UNAUTHORIZED REPAIRS (MADE OR ATTEMPTED) OR UNUSUAL APPLICATION.

Some states do not allow limitations on how long an implied warranty lasts or the exclusion or limitations of incidental or consequential damages, so the above limitations and exclusions may not apply to you. This warranty gives you specific rights and you may have other rights which vary from state to state.

Date Purchased _____

Store Purchased _____

UL Model No. P2546

Serial No. _____

Vendor No. 111017

UPC 785247 214884

785247 214891

PROGRESS LIGHTING™

Table of Contents

Safety Rules 1

Unpacking Your Fan 2

Installing Your Fan 3

Making the Electrical Connections 6

Operating Your Fan 9

Care of Your Fan 10

Troubleshooting 10

Specifications 11

READ AND SAVE THESE INSTRUCTIONS

1. To reduce the risk of electric shock, insure electricity has been turned off at the circuit breaker or fuse box before beginning.
2. All wiring must be in accordance with the National Electrical Code ANSI/NFPA 70-1999 and local electrical codes. Electrical installation should be performed by a qualified licensed electrician.
3. **CAUTION:** To reduce the risk of personal injury, use only the screws provided with the electrical box.
4. The outlet box and support structure must be securely mounted and capable of reliably supporting 50 lbs. (22.68 kg). Use only UL Listed outlet boxes marked "Acceptable for Fan Support of 50 lbs. ((22.68 kg) or less."
5. **CAUTION:** The fan must be mounted with a **minimum of 7 feet clearance** from the trailing edge of the blades to the floor.
6. Do not wait for the fan to stop before pressing the reverse button. The fan will not reverse direction if the fan is not moving.

WARNING

TO REDUCE THE RISK OF FIRE, ELECTRIC SHOCK OR PERSONAL INJURY, MOUNT TO OUTLET BOX MARKED "ACCEPTABLE FOR FAN SUPPORT OF 50 LBS. (22.68 KG) OR LESS", AND USE SCREWS PROVIDED WITH THE OUTLET BOX.

WARNING

TO REDUCE THE RISK OF PERSONAL INJURY, DO NOT BEND THE BLADE BRACKETS (ALSO REFERRED TO AS ("FLANGES") DURING ASSEMBLY OR AFTER INSTALLATION. DO NOT INSERT OBJECTS IN THE PATH OF THE BLADES.

7. Avoid placing objects in path of the blades.
8. To avoid personal injury or damage to the fan and other items, be cautious when working around or cleaning the fan.
9. Do not use water or detergents when cleaning the fan or fan blades. A dry dust cloth or lightly dampened cloth will be suitable for most cleaning.
10. After making electrical connections, spliced conductors should be turned upward and pushed carefully up into electrical box. The wires should be spread apart with the grounded conductor and the equipment-grounding conductor on one side of the electrical box and ungrounded conductor on the other side of the electrical box.
11. Electrical diagrams are for reference only. Light kits that are not packed with the fan must be UL Listed and marked suitable for use with the model fan you are installing. Switches must be UL General Use Switches. Refer to the instructions packaged with the light kits and switches for proper assembly.
12. All set screws must be checked and retightened where necessary before installation.
13. WARNING: To reduce the risk of fire or electric shock, this fan should only be used with fan speed control part no. UC7067RY, manufactured by Rhine Electronic Co., Ltd.
14. Suitable for use with solid-state speed controls.

WARNING

TO REDUCE THE RISK OF SHOCK, THIS FAN MUST BE INSTALLED WITH AN ISOLATION CONTROL/SWITCH.

1. Safety Rules

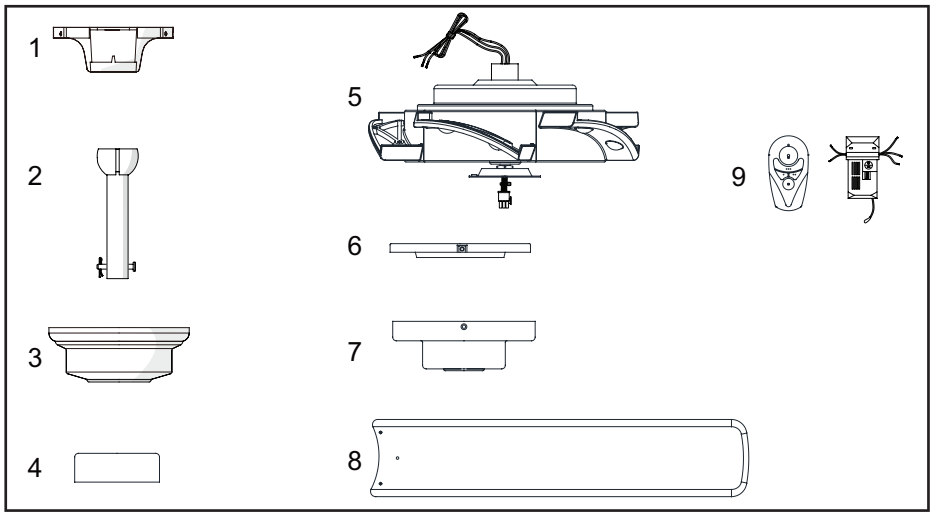

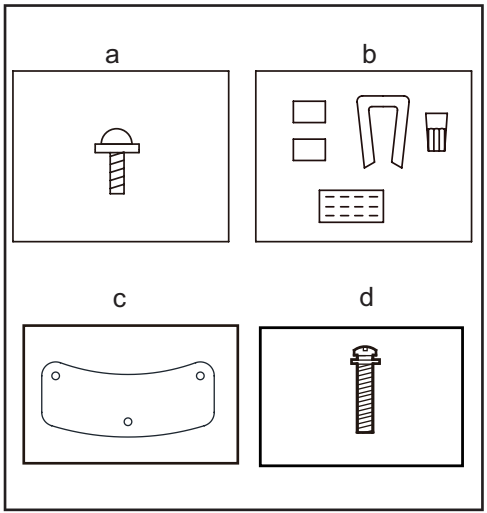

Unpack your fan and check the contents. You should have the following items:

1. Mounting Bracket (inside canopy)
2. 8” Ball/Downrod Assembly (hanger pin and locking pin pre-attached)
3. Canopy with Canopy Ring (attached)
4. Decorative Motor Collar Cover
5. Fan Motor Assembly
6. Switch Cup Adaptor
7. Switch Cup
8. Blade (5)
9. Transmitter and Receiver

a. **Blade attachment hardware** (16 Screws)
b. **Electrical hardware and Balancing kit** (3 plastic wire connectors, blade balancing kit)
c. **Blade attachment hardware** (5 strength plates)
d. **Extra mounting screws 10-32 for outlet box** (1 Screws)

2. Unpacking Your Fan

Tools Required

Phillips screw driver or straight slotted screw driver, adjustable wrench, step ladder, and wire cutters.

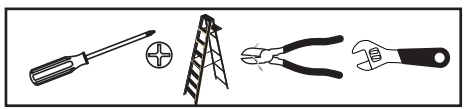

Mounting Options

If there isn't an existing electrical box, then read the following instructions. **Disconnect the power by removing fuses or turning off circuit breakers.**

Secure the electrical box directly to the building structure. Use appropriate fasteners and building materials. The electrical box and its support must be able to fully support the moving weight of the fan (at least 50 lbs.). **Do not use plastic electrical boxes.**

WARNING

TO REDUCE THE RISK OF FIRE, ELECTRIC SHOCK OR PERSONAL INJURY, MOUNT TO OUTLET BOX MARKED "ACCEPTABLE FOR FAN SUPPORT OF 50 LBS. (22.68 KG) OR LESS", AND USE SCREWS PROVIDED WITH THE OUTLET BOX. ELECTRICAL BOXES COMMONLY USED FOR THE SUPPORT OF LIGHTING FIXTURES MAY NOT BE ACCEPTABLE FOR FAN SUPPORT AND MAY NEED TO BE REPLACED. CONSULT A QUALIFIED ELECTRICIAN IF IN DOUBT.

Figures 1, 2, and 3 are examples of different ways to mount the electrical box.

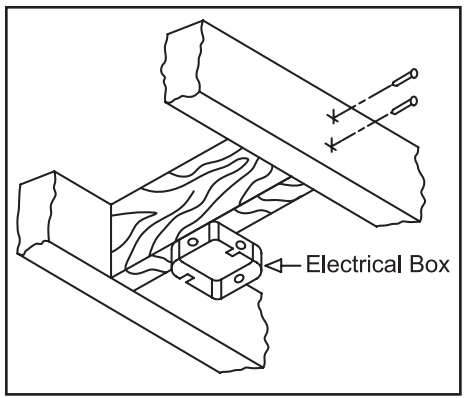

Figure 1

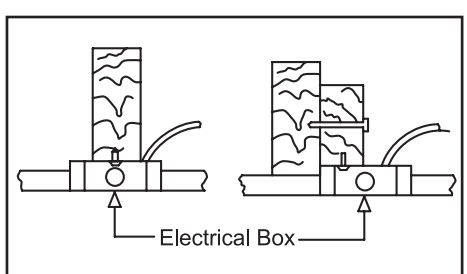

Figure 2

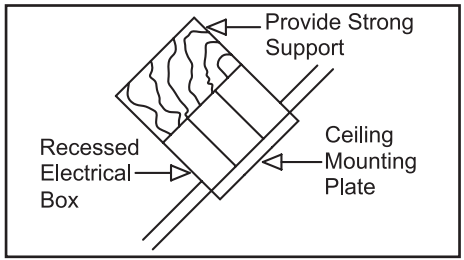

Figure 3

Note: You may need a longer downrod to maintain proper blade clearance when installing on a steep, sloped ceiling. **The maximum angle allowable is 30˚. If the canopy touches downrod, remove the decorative canopy bottom cover and turn the canopy 180˚ before attaching the canopy to the mounting plate.**

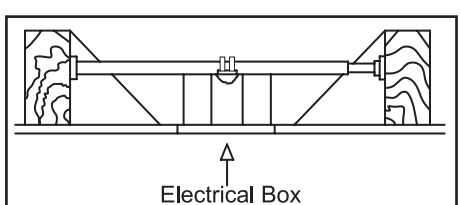

Figure 4

To hang your fan where there is an existing fixture but no ceiling joist, you may need an installation hanger bar as shown in Figure 4.

3. Installing Your Fan

Hanging the Fan

REMEMBER to turn off the power. Follow the steps below to hang your fan properly.

NOTE: This fan is recommended for standard ceiling mount using the downrod provided with this fan. When using standard ceiling installation with the 8 inch downrod provided, the distance from the ceiling to the bottom of the fan blades will be approximately 12 inches.

Standard Ceiling Mounting

1. Remove the canopy ring from the canopy by turning the ring to the right until it unlocks. (Figure 5)
2. Remove the mounting bracket from the canopy by loosening the four screws on the top of the canopy. Remove the two non-slotted screws and loosen the slotted screws. This will enable you to remove the mounting bracket. (Figure 6)
3. Remove the hanger pin and locking pin from downrod assembly.
4. Route the wires exiting the top of the fan motor through the decorative motor collar cover then the canopy ring. Make sure the slot openings are on top. Route the wires through the canopy and then through the ball/downrod assembly. (Figure 7)

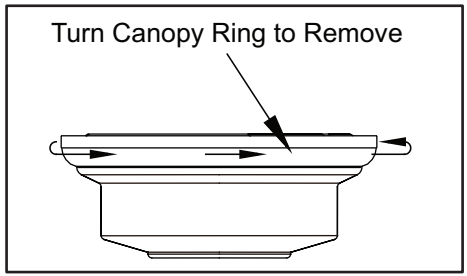

Figure 5

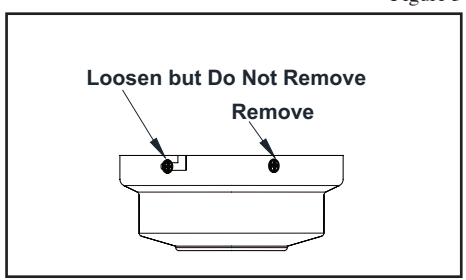

Figure 6

5. Loosen, but do not remove, the set screws on the collar on the top of the motor housing.
6. Align the holes at the bottom of the downrod with the holes in the collar on top of the motor housing. (Figure 7) Carefully insert the hanger pin through the holes in the collar and downrod. Be careful not to jam the hanger pin against the wiring inside the downrod. Insert the locking pin through the hole near the end of the bolt until it snaps into its locked position, as noted in the circle inset of Figure 7.
7. Re-tighten the set screws on the collar on top of the motor housing.
8. Make sure the grommet is properly installed in the collar cover, then slide the collar cover on the downrod until it rests on the motor housing. Be sure that the canopy and the collar cover are both oriented correctly.
9. Proceed to “Installing the Fan” section.

WARNING

FAILURE TO PROPERLY INSTALL SET SCREWS AS NOTED IN STEP 7 COULD RESULT IN FAN LOOSENING AND POSSIBLY FALLING.

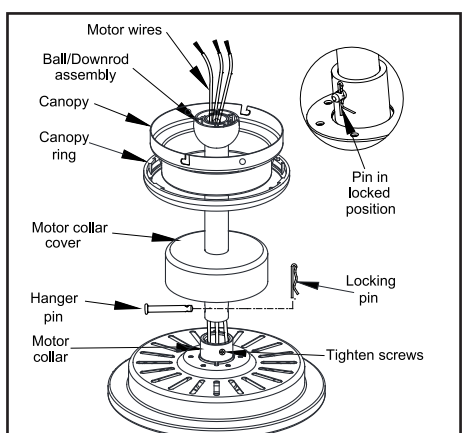

Figure 7

Installing Fan to the Electrical Box

CAUTION

WHEN MOUNTING THE FAN ON A SLOPED CEILING, THE STANDARD BALL/DOWNROD MOUNTING METHOD MUST BE USED. THE MOUNTING PLATE MUST BE MOUNTED SO THAT THE SLOT OPENINGS ARE ON THE LOWER SIDE BY SLIDING THE MOUNTING PLATE FROM THE TOP DOWN.

1. Pass the 120-volt supply wires through the center hole in the ceiling mounting bracket as shown in Figure 8.
2. Install the ceiling mounting bracket on the outlet box by sliding the mounting bracket over the two screws provided with the outlet box. If necessary, use leveling washers (not included) between the mounting bracket and the outlet box. Note that the flat side of the mounting bracket is toward the outlet box. (Figure 8)
3. Securely tighten the two mounting screws.
4. Carefully lift the fan assembly up to the ceiling mounting bracket. Make sure the tab on the mounting bracket is properly seated in the groove in the hanger ball. (Figure 9)

WARNING

WHEN USING THE STANDARD BALL/DOWNROD MOUNTING, THE TAB IN THE RING AT THE BOTTOM OF THE MOUNTING BRACKET MUST REST IN THE GROOVE OF THE HANGER BALL. FAILURE TO PROPERLY SEAT THE TAB IN THE GROOVE COULD CAUSE DAMAGE TO WIRING.

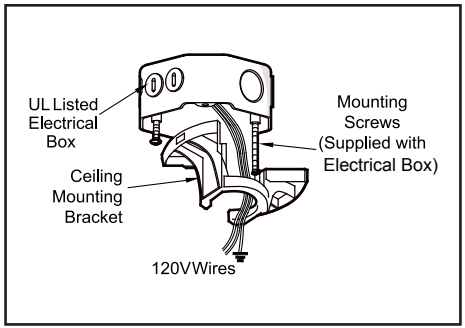

Figure 8

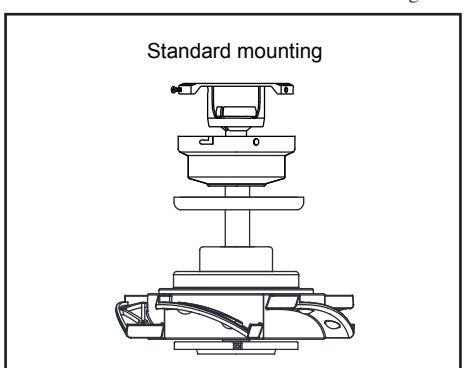

Figure 9

Making the Electrical Connections

REMEMBER to disconnect the power. If you feel you do not have enough electrical wiring knowledge or experience, have your fan installed by a licensed electrician.

Follow the steps below to connect the fan to your household wiring. Use the wire connecting nuts supplied with your fan and supplied with remote control. Secure the connectors with electrical tape. Make sure there are no loose strands or connections. (Figure 10)

1. Connect the ground conductor of the 120v supply (this may be a bare wire or a wire with green colored insulation) to the green ground lead(s) of the fan (Figure 10).
2. Connect the fan motor white wire to the receiver white wire using a wire nut (Figure 10).
3. Connect the fan motor black wire to the receiver black wire using a wire nut (Figure 10).
4. Connect the fan motor blue wire to the receiver blue wire using a wire nut (Figure 10).

5. Connect the receiver black wire to the supply black (hot) wire using a wire nut (Figure 10).
6. Connect the receiver white wire to the supply white (neutral) wire using a wire nut (Figure 10).
7. After connecting the wires, spread them apart so that the green and white wires are one side of the electrical box and the black wire is on the other side.
8. Turn the wire connecting nuts upward and carefully push the wiring into the electrical box.

NOTE

USE THE PLASTIC WIRE CONNECTORS SUPPLIED WITH YOUR FAN. SECURE THE CONNECTORS WITH ELECTRICAL TAPE AND ENSURE THERE ARE NO LOOSE STRANDS OR CONNECTIONS.

WARNING

EACH WIRE NUT (WIRE CONNECTOR) SUPPLIED WITH THIS FAN IS DESIGNED TO ACCEPT UP TO ONE 12 GAUGE HOUSE WIRE AND TWO WIRES FROM THIS FAN. IF YOU HAVE LARGER THAN 12 GAUGE HOUSE WIRING OR MORE THAN ONE HOUSE WIRE TO CONNECT TO THE FAN WIRING, CONSULT AN ELECTRICIAN FOR THE PROPER SIZE WIRE NUTS TO USE.

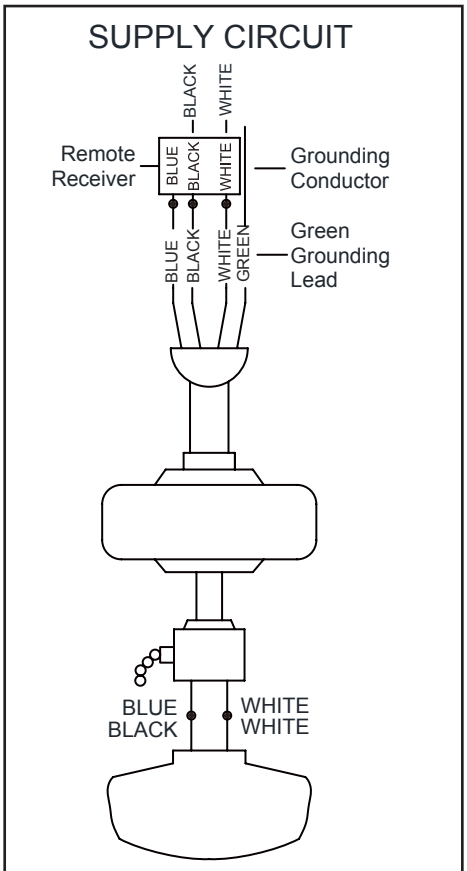

Figure 10

Finishing the Fan Installation

STANDARD CEILING MOUNTING

WARNING

WHEN USING THE STANDARD BALL/DOWNROD MOUNTING, THE TAB IN THE RING AT THE BOTTOM OF THE MOUNTING PLATE MUST REST IN THE GROOVE OF THE HANGER BALL. FAILURE TO PROPERLY SEAT THE TAB IN THE GROOVE COULD CAUSE DAMAGE TO WIRING.

1. Align the locking slots of the ceiling canopy with the two screws in the mounting plate. Push up to engage the slots and turn clockwise to lock in place. Immediately tighten the two mounting screws firmly.
2. Install the remaining two mounting screws into the holes in the canopy and tighten firmly.
3. Install the decorative canopy ring by aligning the ring's slots with the screws in the canopy. Rotate the ring counter-clockwise to lock in place.
4. You may now proceed to attaching the fan blades.

Connecting the Safety Cable

1. Turn the wood screw (not provided) into the ceiling.
2. Place the looped end of the safety cable onto the wood screw and then tighten the screw firmly, or connect the safety cable directly the outer joist.

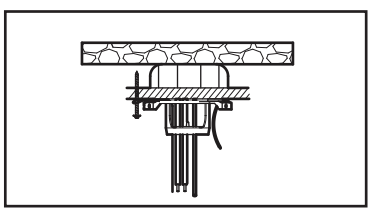

Figure 11

Attaching the Fan Blades

1. Align the holes in the strength plate and holes in the blade with holes in the blade arm and secure with the screws provided (Figure 12).
2. Repeat for the remaining blades.

Blade Balancing

All blades are grouped by weight. Because natural woods vary in density, the fan may wobble even though the blades are weight matched.

The following procedure should correct most fan wobble. Check after each step.

1. Check that all blade screws are secure.
2. Most fan wobble problems are caused when blade levels are unequal. Check this level by selecting a point on the ceiling above the tip of one of the blades. Measure from a point on the center of each blade to the point on the ceiling. Measure this distance as shown in Figure 13. Rotate the fan until the next blade is positioned for measurement. Repeat for each blade. Measurements deviation should be within 1/8”. Run the fan for 10 minutes.
3. Make sure that canopy is tightened securely to ceiling mounting bracket and that the ceiling mounting bracket is tightened securely to the electrical box.
4. Interchanging two adjacent blades can redistribute the weight and possibly result in the smoother operation.
5. Use the enclosed Blade Balancing Kit if the blade wobble is still noticeable.

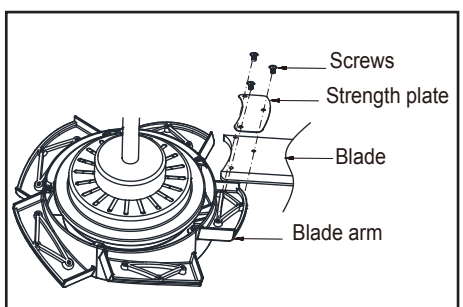

Figure 12

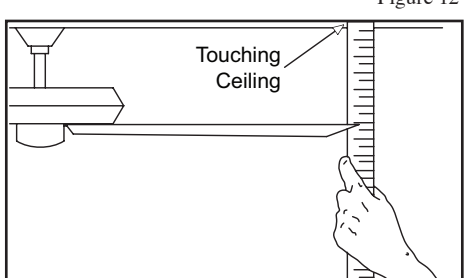

Figure 13

Attaching the Switch Cup Adaptor/ Attaching the Switch Cup

CAUTION - To reduce the risk of electrical shock, disconnect the electrical supply circuit to the fan before installing the light kit.

1. Remove one screw from the black bracket below the fan motor assembly. Loosen, but do not remove the other two screws. Align the key hole slots in the switch cup adaptor with the two screws in the black bracket. (Figure 14)
2. Turn the switch cup adaptor clockwise until the two screws are situated in the narrow end of the keyholes. Re-install the one screw that was removed in step 1. Tighten all three screws frmly. (Figure 14)
3. Remove three screws from the switch cup adaptor. Connect the molded adaptor plug in the switch cup with the molded adaptor plug of the fan motor assembly. (Figure 15)
4. Install the three screws that were removed in step 3. Tighten all three screws firmly. (Figure 15)

NOTE

PERIODICALLY CHECK THE GLASS BOWL IS SEATED FULLY CLOCKWISE IN THE LIGHT KIT PAN ASSEMBLY.

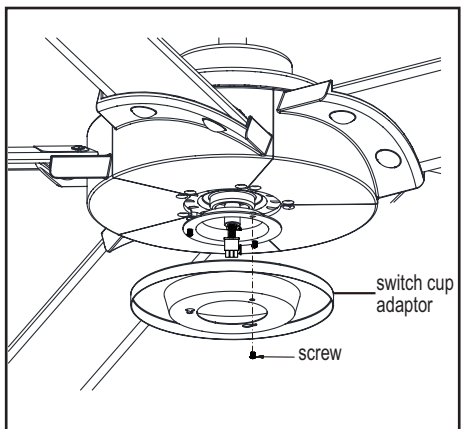

Figure 14

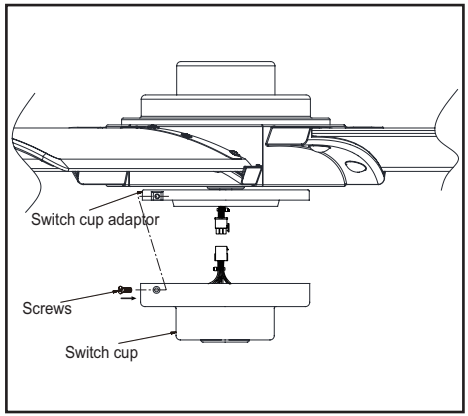

Figure 15

Speed settings for warm or cool weather depend on factors such as room size, ceiling height, number of fans, and so on.

Remote control - Your fan is equipped with a remote contrlol to operate the speed and lights of your new ceiling fan.

Warm weather - (Forward) A downward air flow creates a cooling effect as shown in Figure 16. This allows you to set your air conditioner on a higher setting without affecting your comfort.

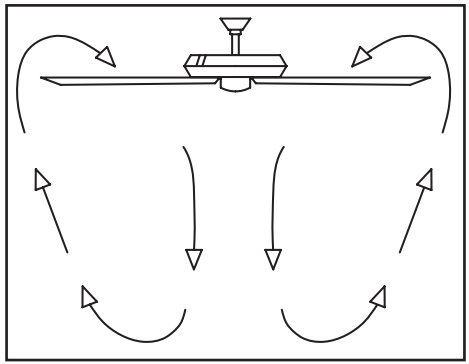

Figure 16

Cool weather - (Reverse) An upward air flow moves warm air off the ceiling are as shown in Figure 17. This allows you to set your heating unit on a lower setting without affecting your comfort.

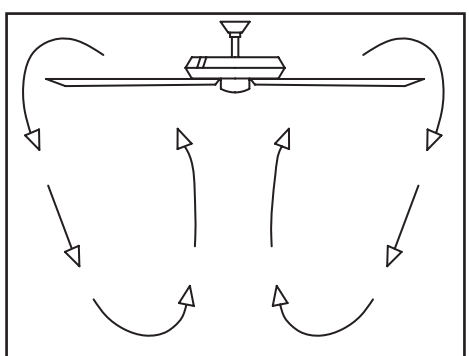

Figure 17

9. Operating Your Fan

Care of Your Fan

Here are some suggestions to help you maintain your fan.

1. Because of the fan's natural movement, some connections may become loose. **Check the support connections, brackets, and blade attachments twice a year**. Make sure they are secure. **(It is not necessary to remove fan from ceiling.)**

2. Clean your fan periodically to help maintain its new appearance over the years. Do not use water when cleaning, this could damage the motor, or the wood or possibly cause an electrical shock. Use only a soft brush or lint-free cloth to avoid scratching the finish. The plating is sealed with a lacquer to minimize discoloration or tarnishing. **Warning - Make sure the power is off before cleaning your fan.**

3. You can apply a light coat of furniture polish to the wood for additional protection and enhanced beauty. Cover small scratches with a light application of shoe polish.

4. **There is no need to oil your fan.** The motor has permanently lubricated sealed ball bearings.

Troubleshooting

Problem	Solution
Fan will not start	1. Check main and branch circuit fuses or breakers 2. Check line wire connections to the fan and switch wire connections in the switch housing. **CAUTION: Make sure main power is off.** 3. Check batteries in the transmitter. Does the red LED light come on? Are you standing close enough to the fan? (Normal range is 10-20 feet.) Are the dip switch settings the same on the transmitter (hand unit) and receiver? **REMEMBER TO TURN OFF POWER SUPPLY BEFORE CHECKING THE DIP SWITCH SETTINGS IN RECEIVER.**
Fan sounds noisy	1. Make sure all motor housing screws are snug. 2. Make sure the screws that attach the fan blade bracket to the motor hub are tight. 3. Make sure wire nut connections are not rattling against each other or the interior wall of the switch housing. **CAUTION: Make sure power is off.** 4. Allow a 24-hour "breaking in" period. Most noises associated with a new fan disappear during this time. 5. If using the Ceiling Fan light kit, make sure the screws securing the glassware are tight. Check that the light bulb is also secure. 6. Make sure the canopy is a short distance from the ceiling. It should not touch the ceiling. 7. Make sure your electrical box is secure and rubber isolator pads were used between the mounting bracket and electrical box.

WARNING

MAKE SURE THE POWER IS OFF AT THE ELECTRICAL PANEL BOX BEFORE YOU ATTEMPT TO MAKE ANY REPAIRS. REFER TO THE SECTION, "MAKING ELECTRICAL CONNECTIONS."

FAN SIZE	SPEED	VOLTS	FAN POWER CONSUMPTION (WITHOUT LIGHTS) WATTS	AIRFLOW CFM	AIRFLOW EFFICIENCY (HIGHER IS BETTER) CFM/WATT	NET WEIGHT	GROSS WEIGHT	CUBE FEET
68”	Low	120	XX	XXXX	XXX	XX.XX Lbs	XX.XX Lbs	X.X
	Med		XX	XXXX	XXX			
	High		XX	XXXX	XX			

This equipment has been tested and found to comply with the limits for a Class B digital device, pursuant to Part 15 of the FCC Rules. These limits are designed to provide reasonable protection against harmful interference in a residential installation. This equipment generates, uses and can radiate radio frequency energy and, if not installed and used in accordance with the instructions, may cause harmful interference to radio communications. However, there is no guarantee that interference will not occur in a particular installation. If this equipment does cause harmful interference to radio or television reception, which can be determined by turning the equipment off and on, the user is encouraged to try to correct the interference by one or more of the following measures:
--Reorient or relocate the receiving antenna.
--Increase the separation between the equipment and receiver.
--Connect the equipment into an outlet on a circuit different from that to which the receiver is connected.
--Consult the dealer or an experienced radio/TV technician for help.
CAUTION:
Any changes or modifications not expressly approved by the grantee of this device could void the user’s authority to operate the equipment.
This device complies with Part 15 of the FCC Rules. Operation is subject to the following two conditions: (1) This device may not cause harmful interference, and (2) this device must accept any interference received, including interference that may cause undesired operation.

©2017 Progress Lighting, Inc.
701 Millennium Blvd.,
Greenville, SC 29607
All Rights Reserved

11. Specifications