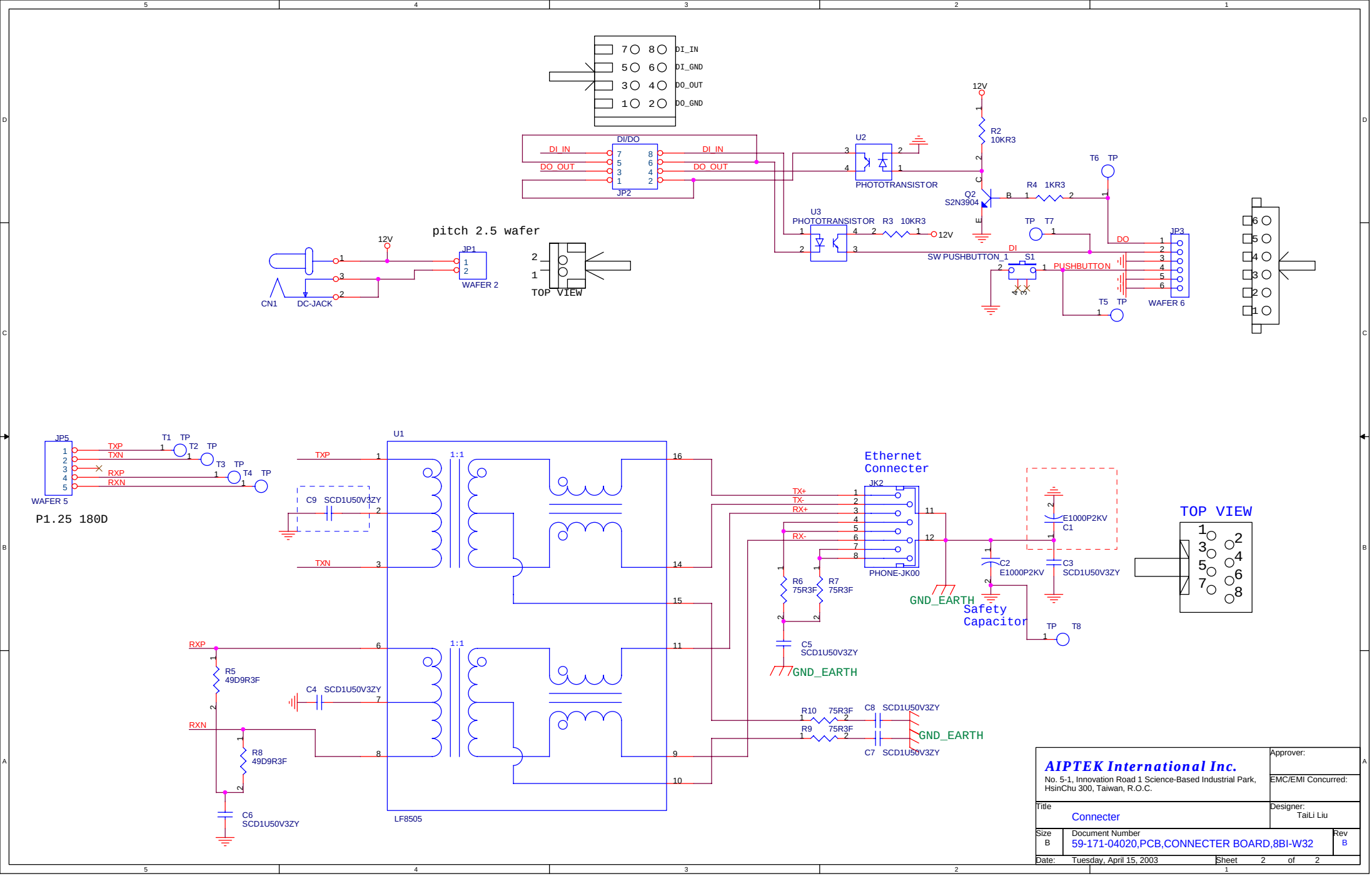

AIPTEK International Inc.
No. 5-1, Innovation Road 1 Science-Based Industrial Park, HsinChu 300, Taiwan, R.O.C.

Approver:
EMC/EMI Concurred:

Title: Connecter
Designer: TaiLi Liu

Size: B
Document Number: 59-171-04020,PCB,CONNECTER BOARD,8BI-W32
Rev: B

Date: Tuesday, April 15, 2003
Sheet 2 of 2