FLATBED STANDARD PARTS

STANDARD	FLATBED WELDMENT	CROSSTUBE	DUMMY ARM LEFT	DUMMY ARM RIGHT
470	211230	211311	211313	211312
470W	211470	211310	211313	211312
475	211232	211311	211315	211314
478	211233	211310	211319	211318
477	211231	211311	211489	211487
480	211234	211310	211321	211320
482	211235	211310	211323	211322
485	211236	211310	211325	211324
487	211237	211310	211327	211326
578	215013	215026	215028	215027
582	215014	215026	215030	215029
587	215016	215026	215034	215033

Parts List		
PART #	QUANTITY	DESCRIPTION
110336	2	WASHER, 1-1/4 FLAT MACHINE 10GA
110437	2	BOLT, 3/8-16 X 0.75, WIZ FLANGE
110440	2	BOLT, 3/8-16 X 1, WIZ FLANGE
110576	2	BOLT, 5/8-11 X 1.5 GR 5
110645	2	NUT, 3/8-16 WIZ FLANGE
110650	2	WASHER, 5/8" FLAT STANDARD
110673	10	WASHER, 1/4" FLAT STANDARD
110676	2	WASHER, 3/8" FLAT STANDARD
200191	2	BUSHING, .5 X .375 X .500 W/FLNG
210459	1	HITCH BALL AND NUT
210753	1	PIN ASSY, LIFT CYLINDER ROD END
210755	1	PIN ASSY, IDLER ARM
210757	2	PIN ASSY, CROSSARM PIVOT
210935	1	IDLER ARM, MACHINE DWG.
211202	1	VALVE COVER
211292	2	SHIELD, CROSSTUBE
211297	---	PUSH ARM KIT
211298	1	PUSH ARM WELDMENT
140015	1	SNAP RING
211282	1	PUSH ARM
211481	1	EDGE TRIM
310325	4	COTTER PIN, 1/4 X 2
510174	4	GREASE ZERK, 1/4-28 ST
710586	10	SCREW, 1/4 X 1 TEK SELF-TAP

*** 400 SERIES
2ea 110533 -- BOLT, 3/8-16 X 5.0

500 SERIES
2ea 110542 -- BOLT, 3/8-16 X 5.5

FLATBED STANDARD PARTS

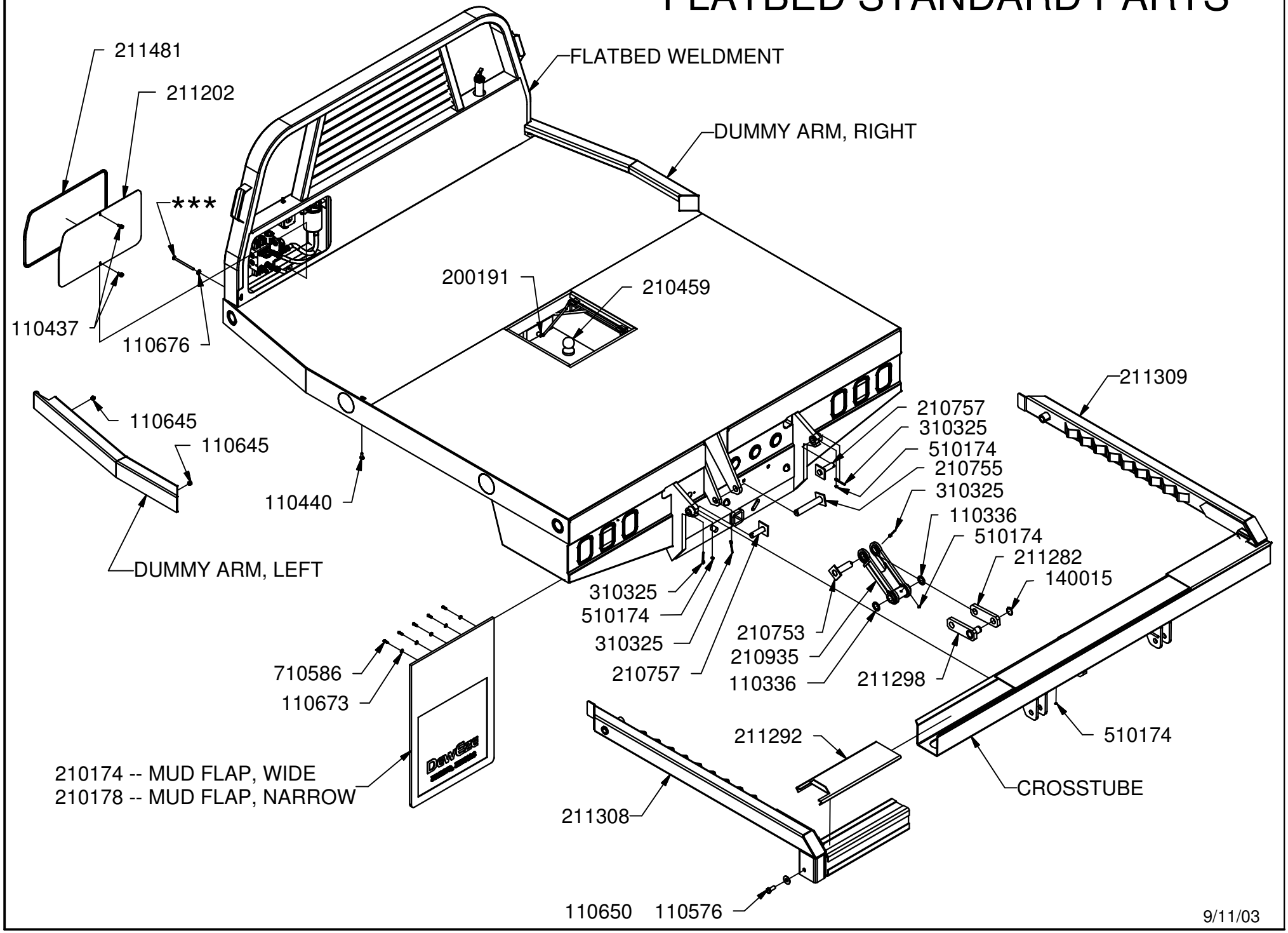

9/11/03

FLATBED XRM PARTS

XRM	FLATBED WELDMENT	CROSSTUBE	DUMMY ARM LEFT	DUMMY ARM RIGHT
470	211366	211402	211406	211405
475	211367	211402	211408	211407
478	211369	211310	211412	211411
477	211368	211402	211410	211409
480	211370	211310	211414	211413
482	211371	211310	211416	211415
485	211372	211310	211418	211417
487	211373	211310	211420	211419
578	215017	215052	215036	215035
582	215018	215052	215038	215037
587	215020	215052	215042	215041

Parts List		
PART #	QUANTITY	DESCRIPTION
200150	2	ROLL PIN, 1/4 X 2
210941	2	CYLINDER PIN
210942	2	FLOATING PIN
211354	1	HUGGER ARM, RIGHT
211355	1	HUGGER ARM, LEFT
211434	1	EXTENSION ARM, LEFT
211433	1	EXTENSION ARM, RIGHT

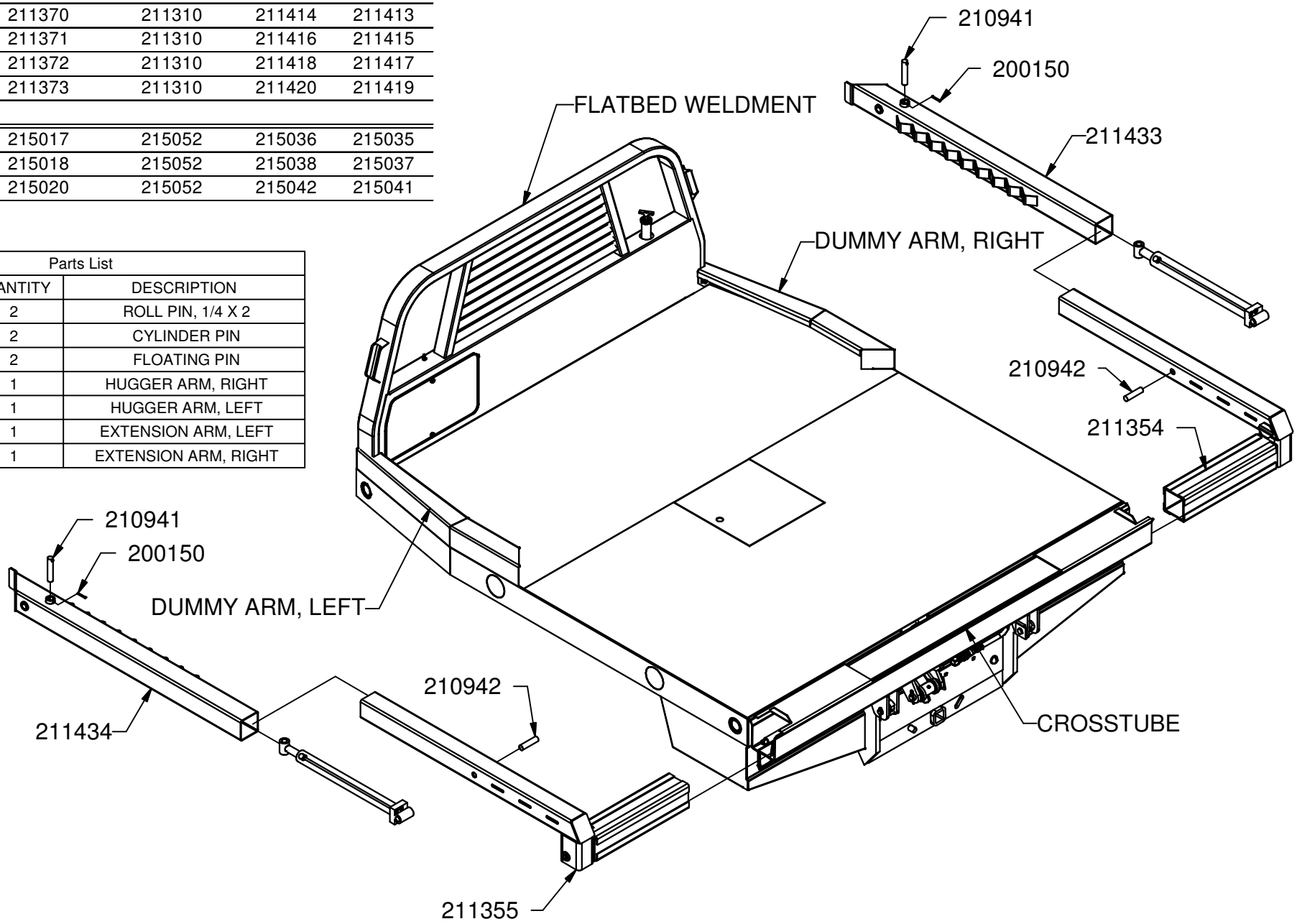

9/11/03

HYDRAULIC ASSEMBLY

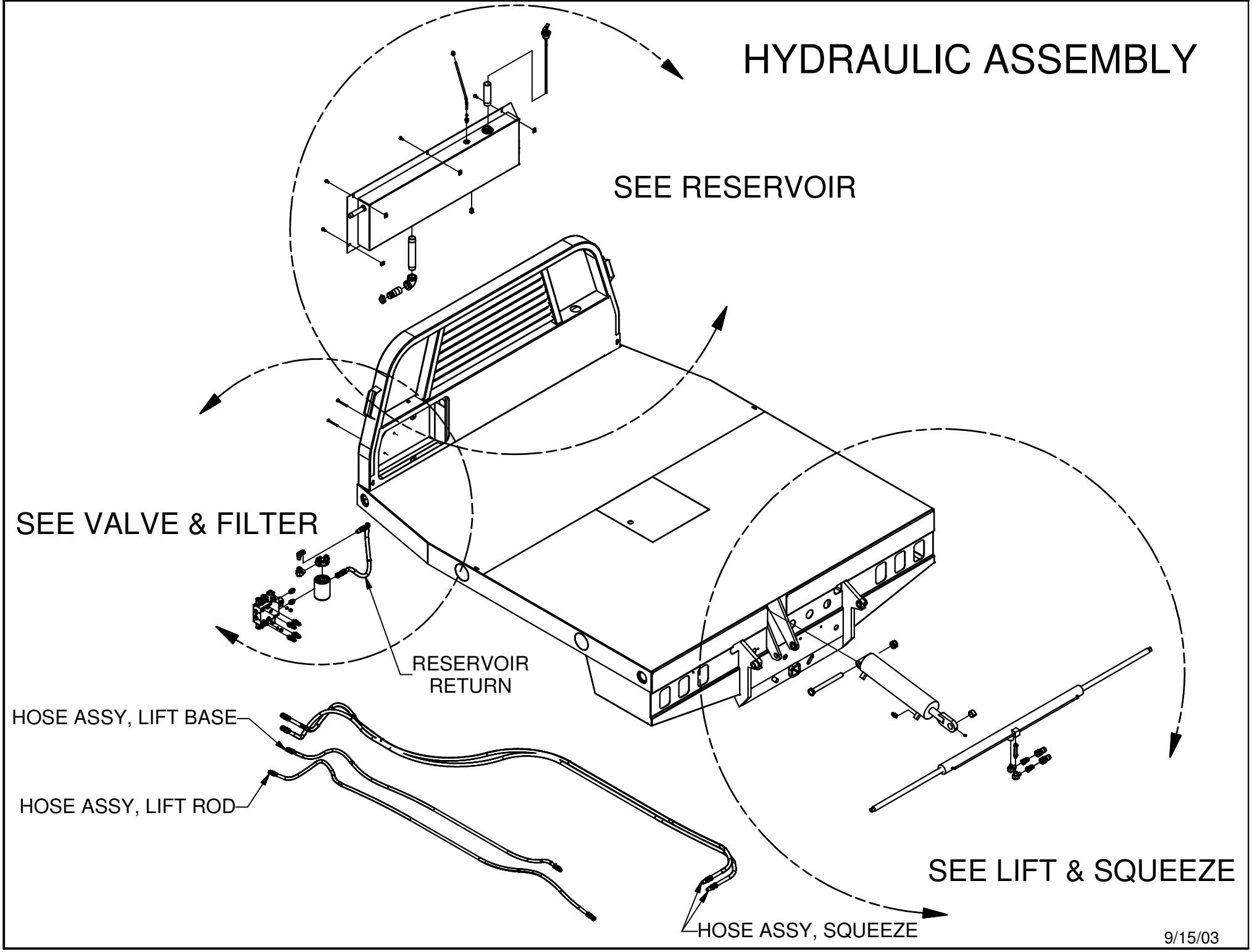

9/15/03

FLATBED SERIES	SQUEEZE HOSES 8M3K - 8MP / 8FJX		LIFT HOSES 6M3K - 6MB / 6FJX		RESERVOIR RETURN 8M3K - 8MP / 8FJX	HYDRAULIC HOSE KIT #
	IN (BLUE)	OUT (ORANGE)	BASE (BROWN)	ROD (GREEN)		
470	220610 (129in)	220610 (129in)	220611 (65in)	220612 (84in)	220422 (26.75in)	**223002**
470W	220610 (129in)	220610 (129in)	220611 (65in)	220612 (84in)	220422 (26.75in)	**223002**
475	220613 (152in)	220613 (152in)	220614 (88in)	220615 (107in)	220422 (26.75in)	**223003**
478	220613 (152in)	220613 (152in)	220614 (88in)	220615 (107in)	220422 (26.75in)	**223003**
477	220616 (164in)	220616 (164in)	220617 (100in)	220618 (119in)	220422 (26.75in)	**223004**
480	220616 (164in)	220616 (164in)	220617 (100in)	220618 (119in)	220422 (26.75in)	**223004**
482	220616 (164in)	220616 (164in)	220617 (100in)	220618 (119in)	220422 (26.75in)	**223004**
485	220619 (176in)	220619 (176in)	220620 (112in)	220621 (131in)	220422 (26.75in)	**223005**
487	220622 (182in)	220622 (182in)	220623 (118in)	220624 (137in)	220422 (26.75in)	**223006**
			6M3K - 6FJX / 6FJX			
578	220613 (152in)	220613 (152in)	220614 (88in)	220642 (107in)	220422 (26.75in)	**223018**
582	220616 (164in)	220616 (164in)	220617 (100in)	220643 (119in)	220422 (26.75in)	**223019**
587	220622 (182in)	220622 (182in)	220623 (118in)	220644 (137in)	220422 (26.75in)	**223020**

HYDRAULIC ASSEMBLY
VALVE & FILTER

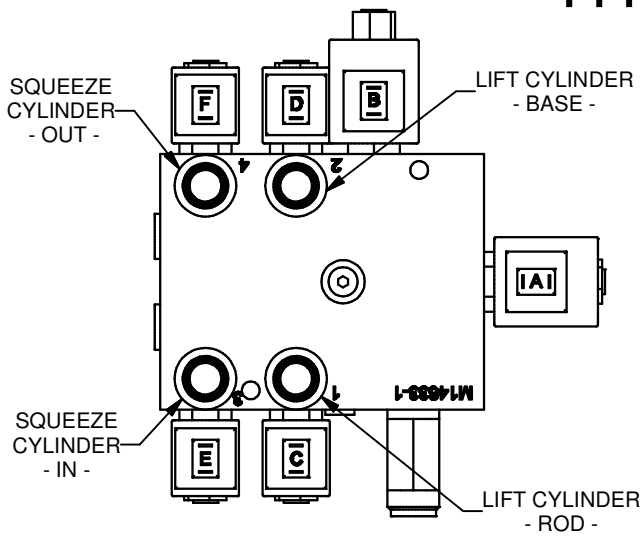

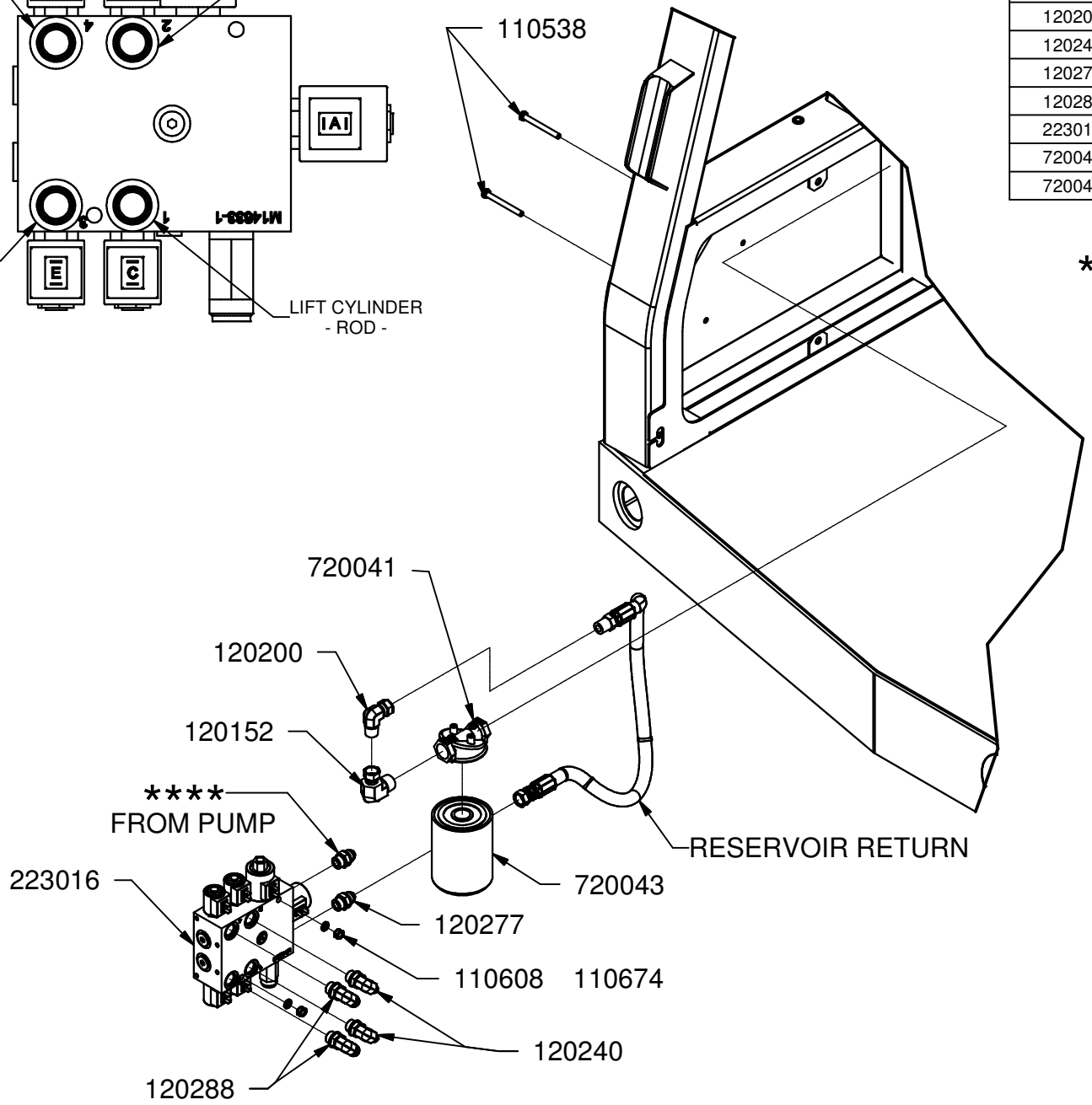

Parts List		
PART #	QUANTITY	DESCRIPTION
110538	2	BOLT, 5/16-18 X 3.0
110608	2	NUT, 5/16-18
110674	2	WASHER, 5/16" LOCK
120152	1	ADAPTER, 12MP-8FPX90
120200	1	ADAPTER, 8MP-8FPX90
120240	2	ADAPTER, 6MJ-8MB90
120277	1	ADAPTER, 8MJ-8MB
120288	2	ADAPTER, 8MJ-8MB90
223016	1	VALVE, FLATBED MONOBLOCK
720041	1	FILTER HEAD
720043	1	FILTER, 10 MICRON

****

5, 7& 9 GALLON SYSTEM

120277 -- ADAPTER 8MJ-8MB

12 & 17 GALLON SYSTEM

120174 -- ADAPTER, 8MB-12FPX

9/15/03

HYDRAULIC ASSEMBLY
LIFT & SQUEEZE

Parts List		
PART #	QUANTITY	DESCRIPTION
110352	1	BOLT, 1-8 X 10, GR8
110602	1	NUT, 1-8 LOCK NYLON INSERT
120145	1	ADAPTER, 6MB-6MP (3/8 X 4)
120146	1	ADAPTER, 8MP-6FP90
120147	1	ADAPTER, 6MB-8MP90
200129	1	BUSHING, 1.5 X 1.25 X 1.0 SPLIT STEEL
220084	2	COUPLER, PIONEER FEMALE
220452	1	LIFT CYLINDER
222001	1	VALVE, CHECK W/ .063 ORIFICE
420005	2	COUPLER, PIONEER MALE
510174	1	GREASE ZERK, 1/4-28 ST

SQUEEZE CYLINDER

400 SERIES	220002
500 SERIES & ALL XRM	223001

SEAL KITS

SQUEEZE CYLINDER	220056
LIFT CYLINDER	220464

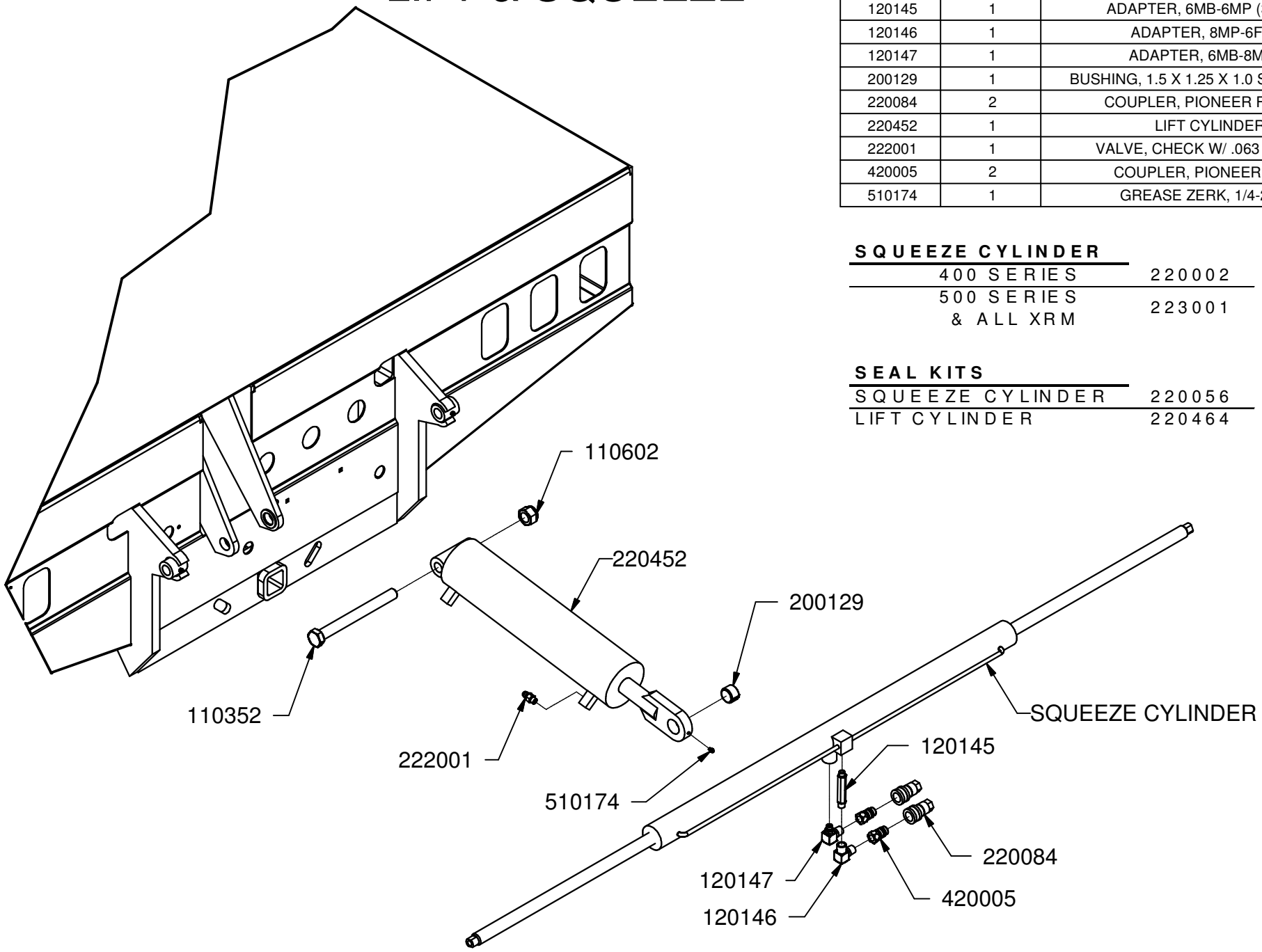

9/15/03

HYDRAULIC ASSEMBLY RESERVOIR

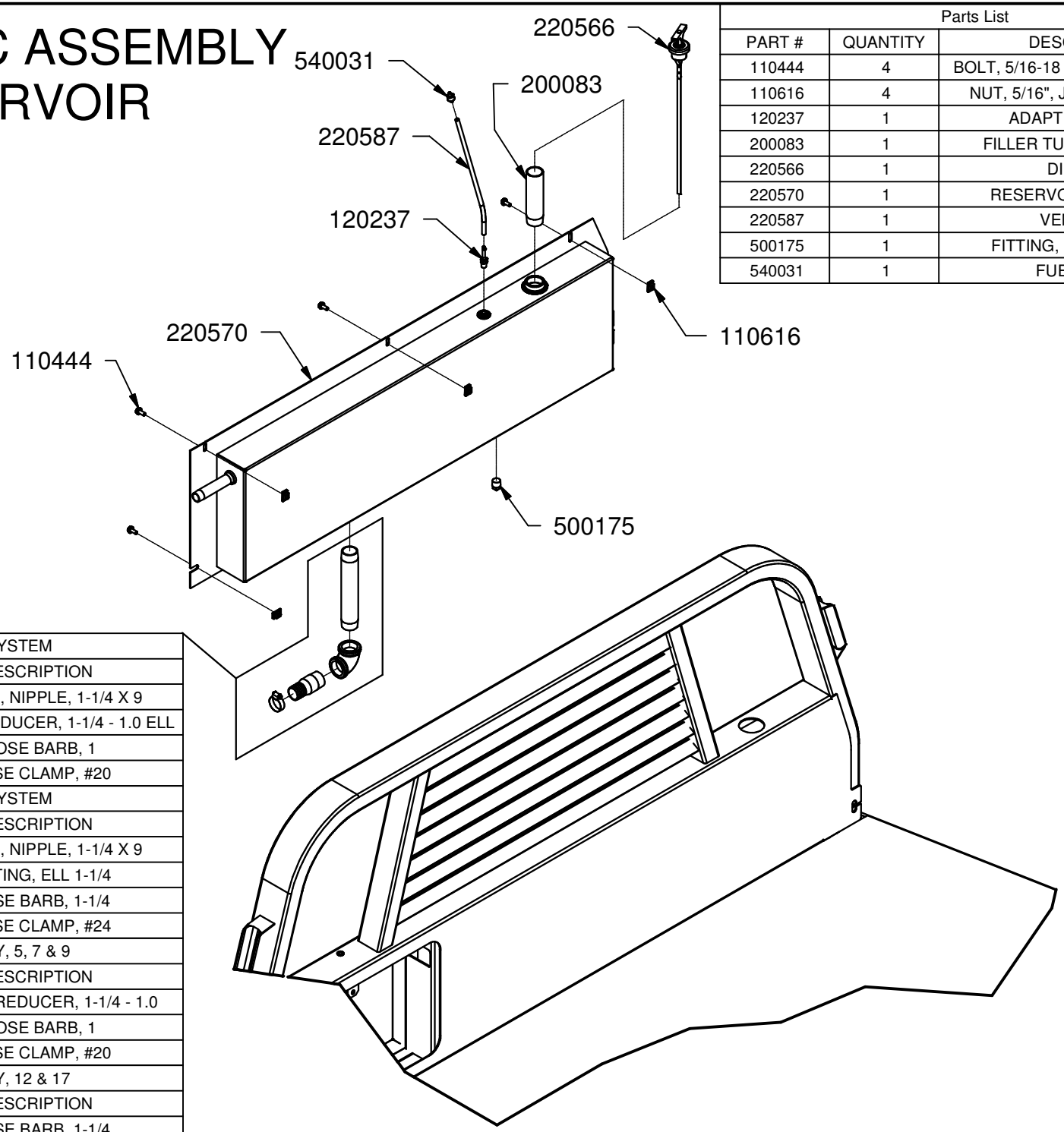

Parts List		
PART #	QUANTITY	DESCRIPTION
110444	4	BOLT, 5/16-18 X 0.75, WIZ FLANGE
110616	4	NUT, 5/16", J-TYPE, CAGE, .5C
120237	1	ADAPTER, 4BH-4MP
200083	1	FILLER TUBE, RESERVOIR
220566	1	DIP STICK
220570	1	RESERVOIR WELDMENT
220587	1	VENT HOSE
500175	1	FITTING, PLUG 1/2" PIPE
540031	1	FUEL FILTER

5, 7 & 9 GALLON SYSTEM		
PART #	QTY	DESCRIPTION
120086	1	FITTING, NIPPLE, 1-1/4 X 9
220107	1	FITTING, REDUCER, 1-1/4 - 1.0 ELL
720075	1	HOSE BARB, 1
720107	1	HOSE CLAMP, #20
12 & 17 GALLON SYSTEM		
PART #	QTY	DESCRIPTION
120086	1	FITTING, NIPPLE, 1-1/4 X 9
720158	1	FITTING, ELL 1-1/4
220217	1	HOSE BARB, 1-1/4
511002	1	HOSE CLAMP, #24
2003 DODGE DUALLY, 5, 7 & 9		
PART #	QTY	DESCRIPTION
720070	1	FITTING, REDUCER, 1-1/4 - 1.0
720075	1	HOSE BARB, 1
720107	1	HOSE CLAMP, #20
2003 DODGE DUALLY, 12 & 17		
PART #	QTY	DESCRIPTION
220217	1	HOSE BARB, 1-1/4
511002	1	HOSE CLAMP, #24

9/15/03

FLATBED ACCESSORIES

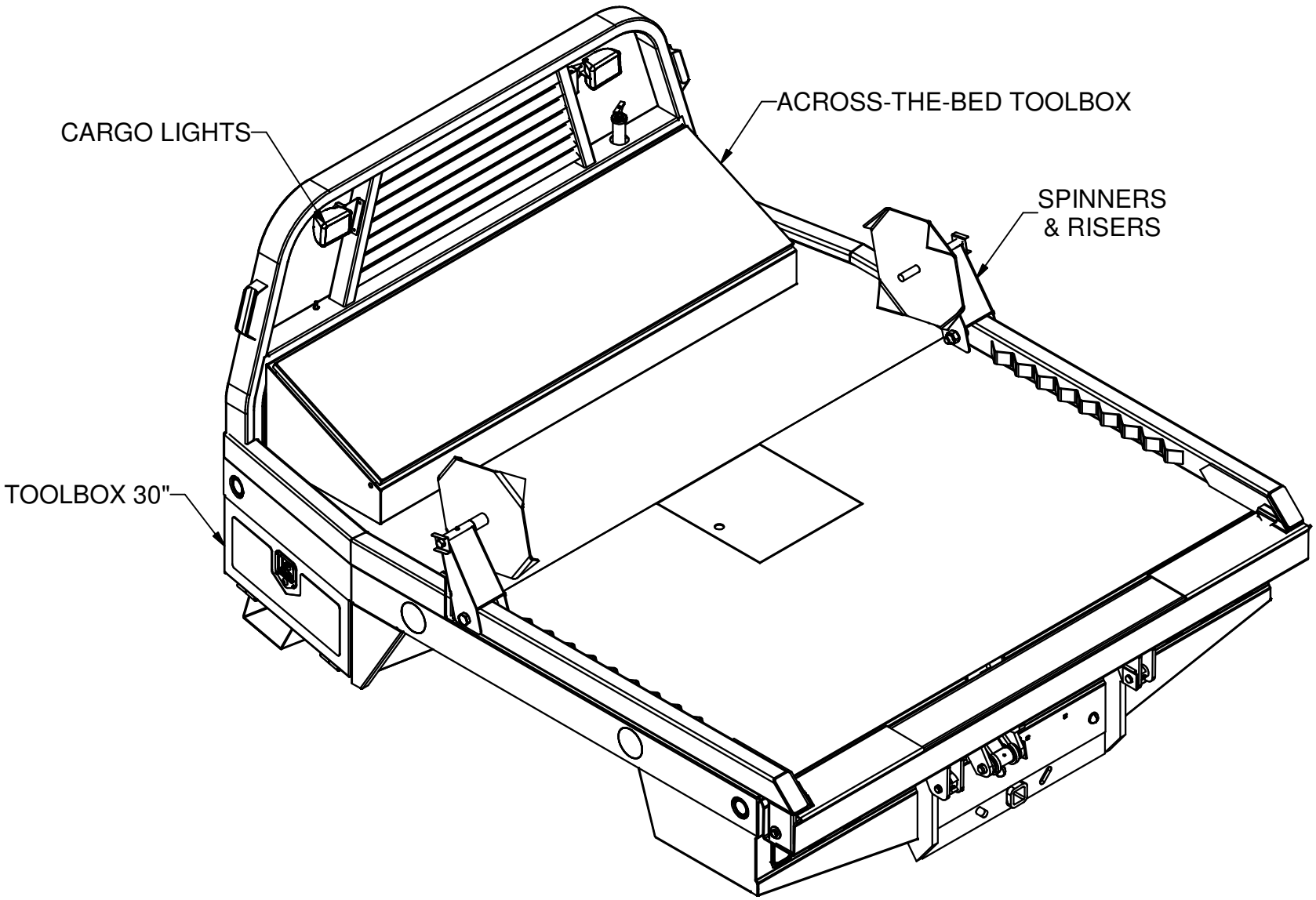

9/16/03

FLATBED ACCESSORIES
TOOLBOX 30"

TOOLBOX COMPLETE W/ STEP, PART#211118		
PART #	QUANTITY	DESCRIPTION
211110	1	TOOLBOX COMPLETE
211109	1	STEP, TOOLBOX
211593	1	TOOLBOX CHIP GUARD
202001	1	DECAL, CHIP GUARD
212003	2	GASKET, TOOLBOX MOUNT
211130	-----	BOLT PACKAGE
110258	12	NUT, 5/16-18, CAGE TINNERMAN
110437	4	BOLT, 3/8-16 X 0.75, WIZ FLANGE
110444	14	BOLT, 5/16-18 X 0.75, WIZ FLANGE
110606	2	NUT, 5/16-18 WIZ FLANGE
110645	4	NUT, 3/8-16 WIZ FLANGE
110676	4	WASHER, 3/8" FLAT STANDARD

TOOLBOX COMPLETE, PART#211110		
PART #	QUANTITY	DESCRIPTION
100442	1	SEAL / LID (NOT SHOWN)
110119	4	NUT, 10-24 LOCK
110264	4	BOLT, 10-24 X .5 STAINLESS, PHILLIPS
200183	1	LATCH
200184	1	SEAL, LATCH
211105	1	TOOLBOX WELDMENT
211119	1	TOOL BOX MAT

FENDER SKIRT

400 SERIES	LEFT	RIGHT
SHORT	211116	211115
LONG	211293	211294
500 SERIES		
SHORT	211569	211568
LONG	211587	211588

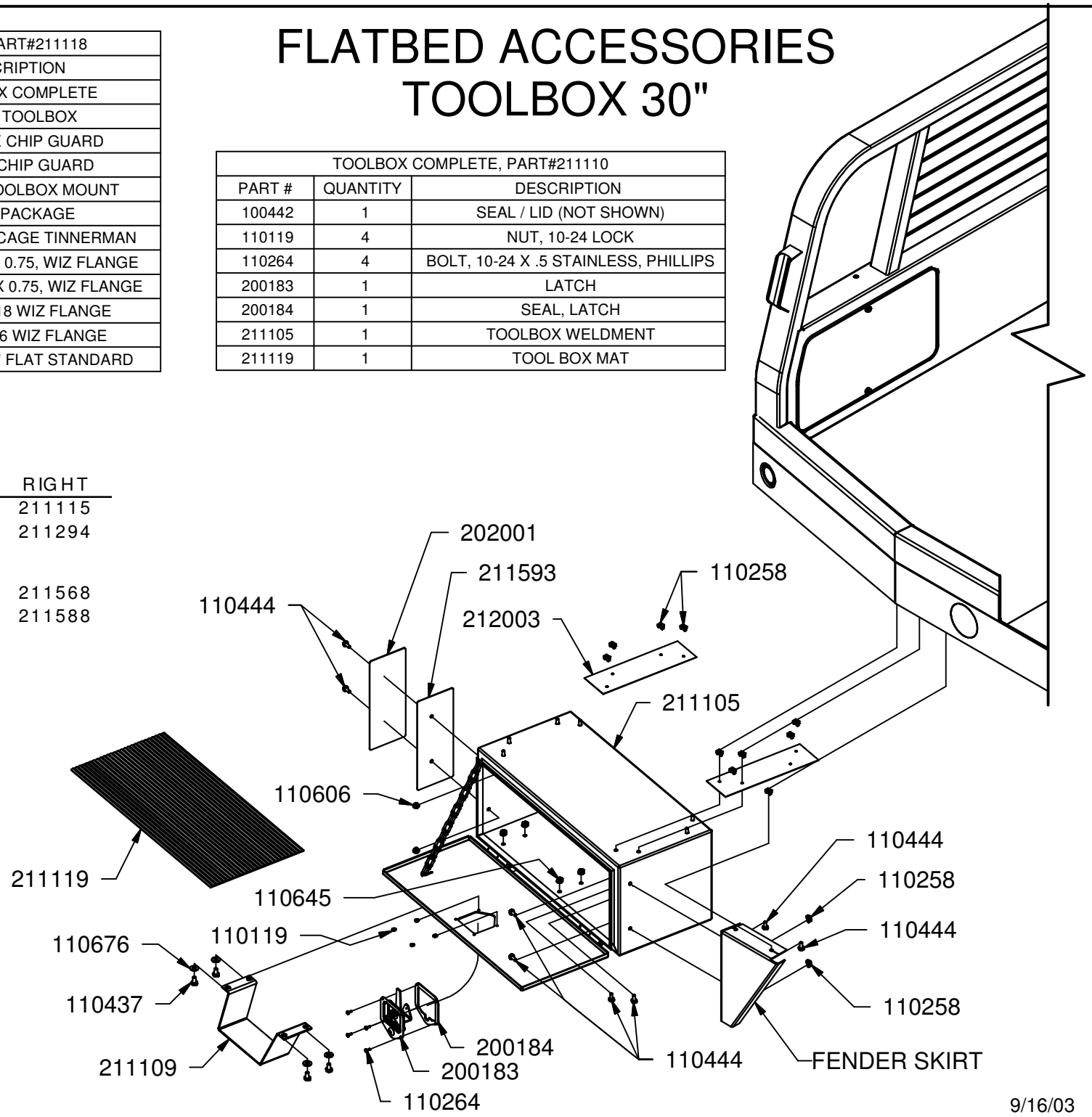

9/16/03

CARGO LIGHT ASSY, PART#211391		
PART #	QUANTITY	DESCRIPTION
211389	1	LIGHT BRACKET, RIGHT
211390	1	LIGHT BRACKET, LEFT
230146	1	GROMMET, 3/16 ID X 9/16 OD
710587	4	SCREW, 3/16 X .75 TEK SELF-TAP
830031	1	LIGHT, RIGHT
830035	1	LIGHT, LEFT

FLATBED ACCESSORIES CARGO LIGHTS & ACROSS THE BED TOOLBOX

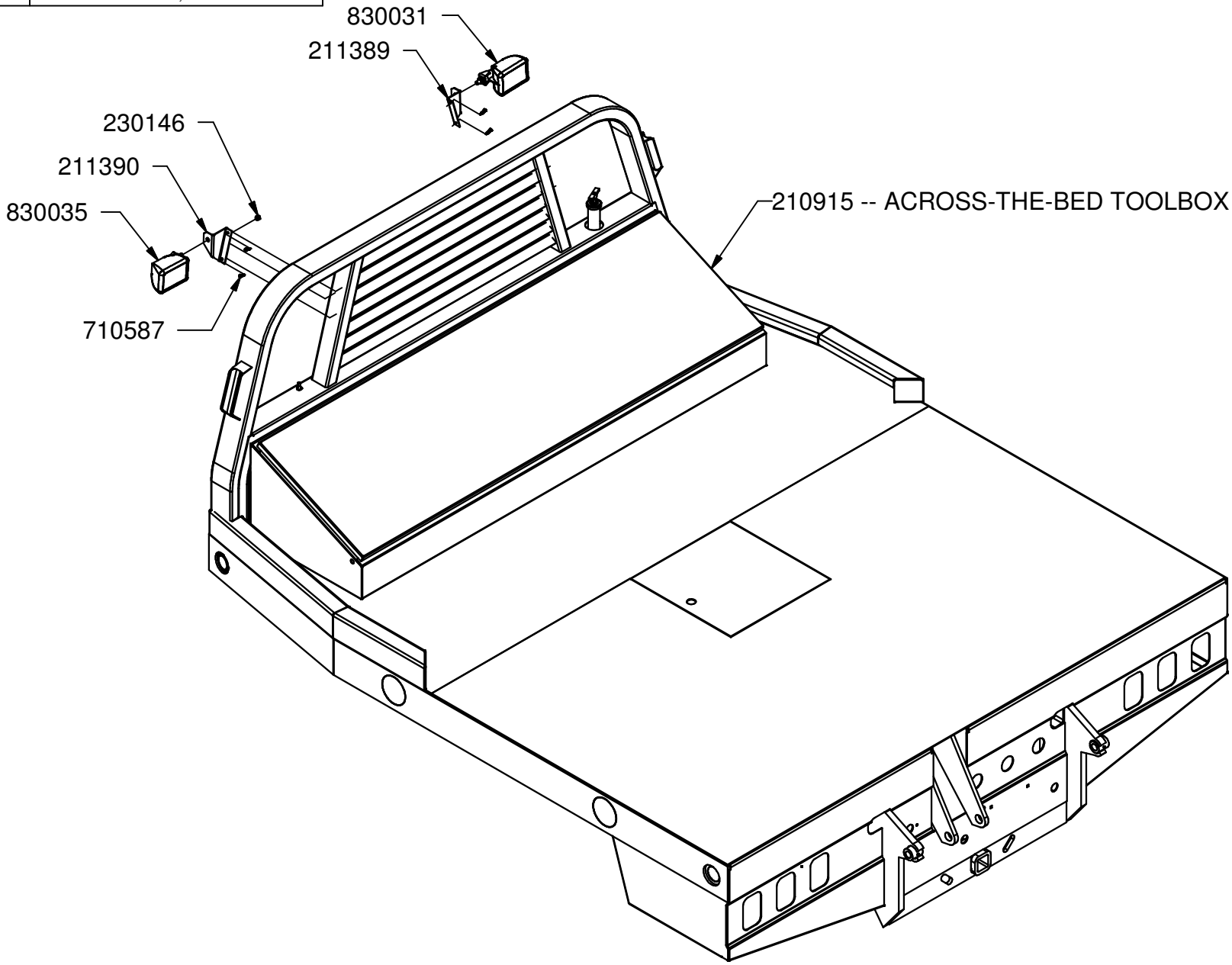

9/16/03

FLATBED ACCESSORIES
SPINNERS & RISERS

SPINNER ASSY (210008) & RISER ASSY (211145)		
PART #	QUANTITY	DESCRIPTION
110364	2	BOLT, 1-8 X 7.0
110601	2	NUT, 1-8
210006	2	Pin, Lynch 1/4 x 1 1/2
210007	2	SPINNER WELDMENT
211125	2	RISER WELDMENT
211513	2	LYNCH PIN GUARD
510174	2	GREASE ZERK, 1/4-28 ST

XRM SPINNER ASSY & RISER ASSY		
PART #	QUANTITY	DESCRIPTION
110364	2	BOLT, 1-8 X 7.0
110601	2	NUT, 1-8
210006	2	Pin, Lynch 1/4 x 1 1/2
211507	1	RISER WELDMENT, LEFT
211508	1	RISER WELDMENT, RIGHT
211509	2	SPINNER WELDMENT
211513	2	LYNCH PIN GUARD
510174	2	GREASE ZERK, 1/4-28 ST

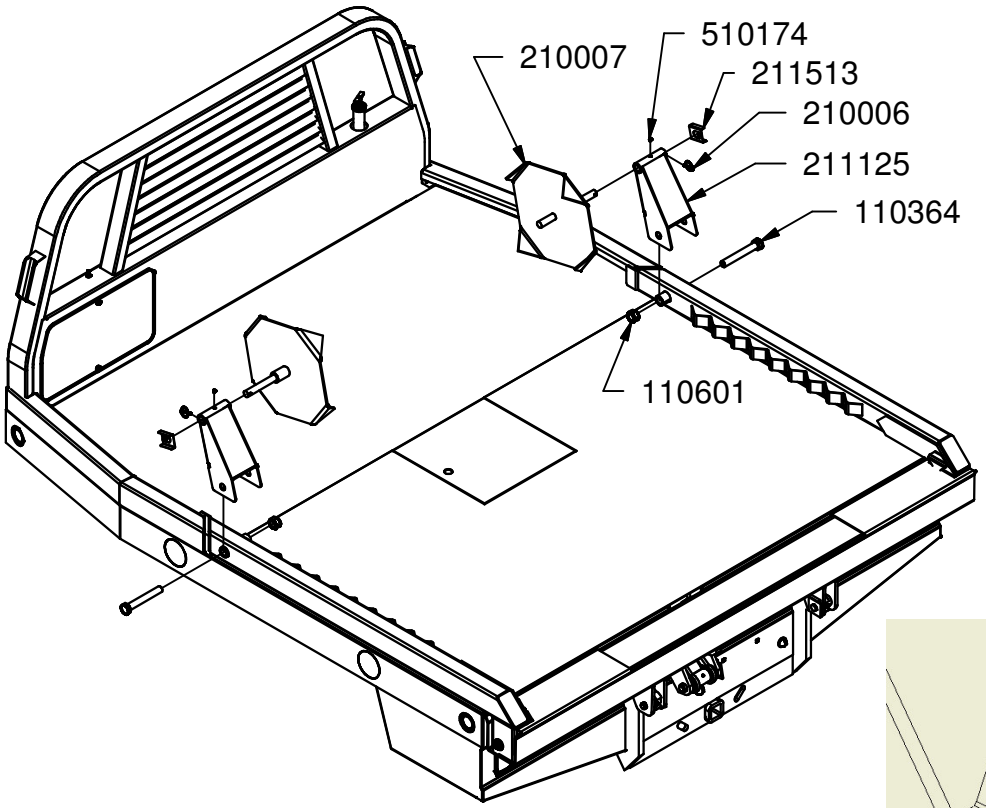

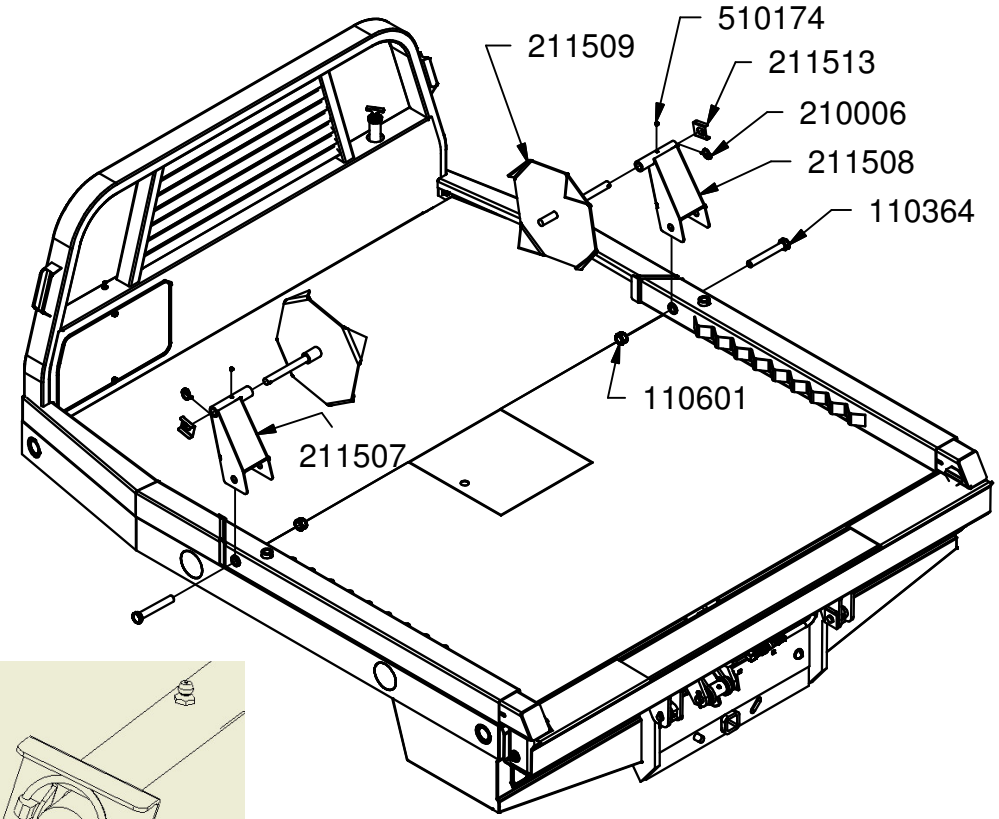

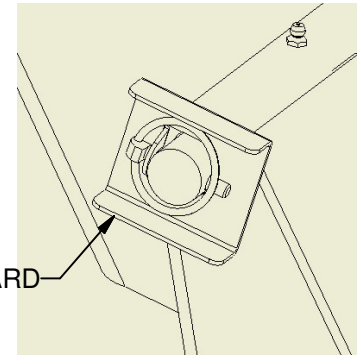

9/16/03

XRM HYDRAULICS

Parts List		
PART #	QUANTITY	DESCRIPTION
110168	4	BOLT, 5/16-18 X 2.0 SHCS
120102	4	ADAPTER, BULKHEAD, 6MJ-6MJ, W/LOCKNUT
120123	4	ADAPTER, 6FP-6FJX
120186	4	ADAPTER, 4MB-4FPX
120240	2	ADAPTER, 6MJ-8MB90
120376	2	O-RING, -119, 90 DURO
220455	1	EXTENDABLE ARM CYLINDER, 2.5
220456	1	EXTENDABLE ARM CYLINDER, 2.0
223017	1	VALVE, 3rd BANK ADD ON
232005	1	TOGGLE SWITCH - 3 POS MOMENTARY
530019	1	SWITCH BOOT

SEAL KITS

2.5 CYLINDER	220499
2.0 CYLINDER	220500

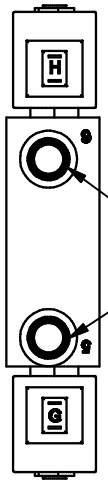

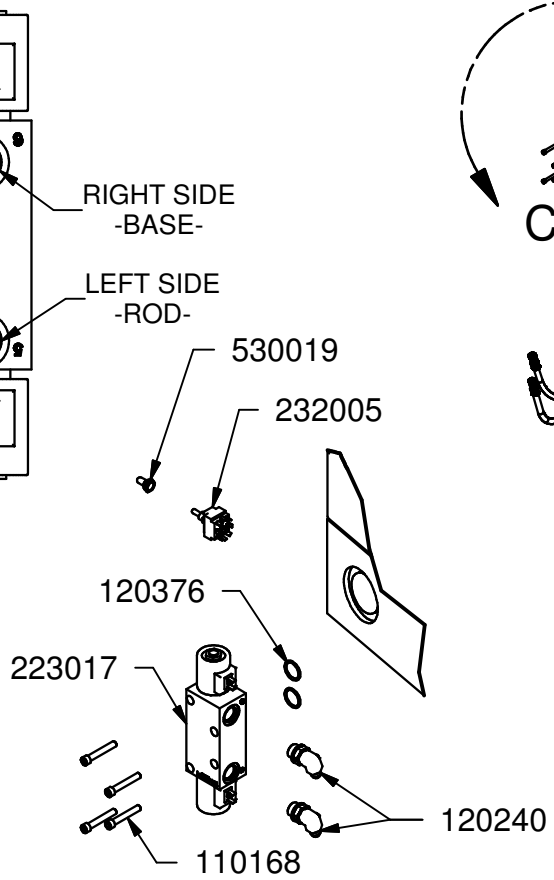

DETAIL C

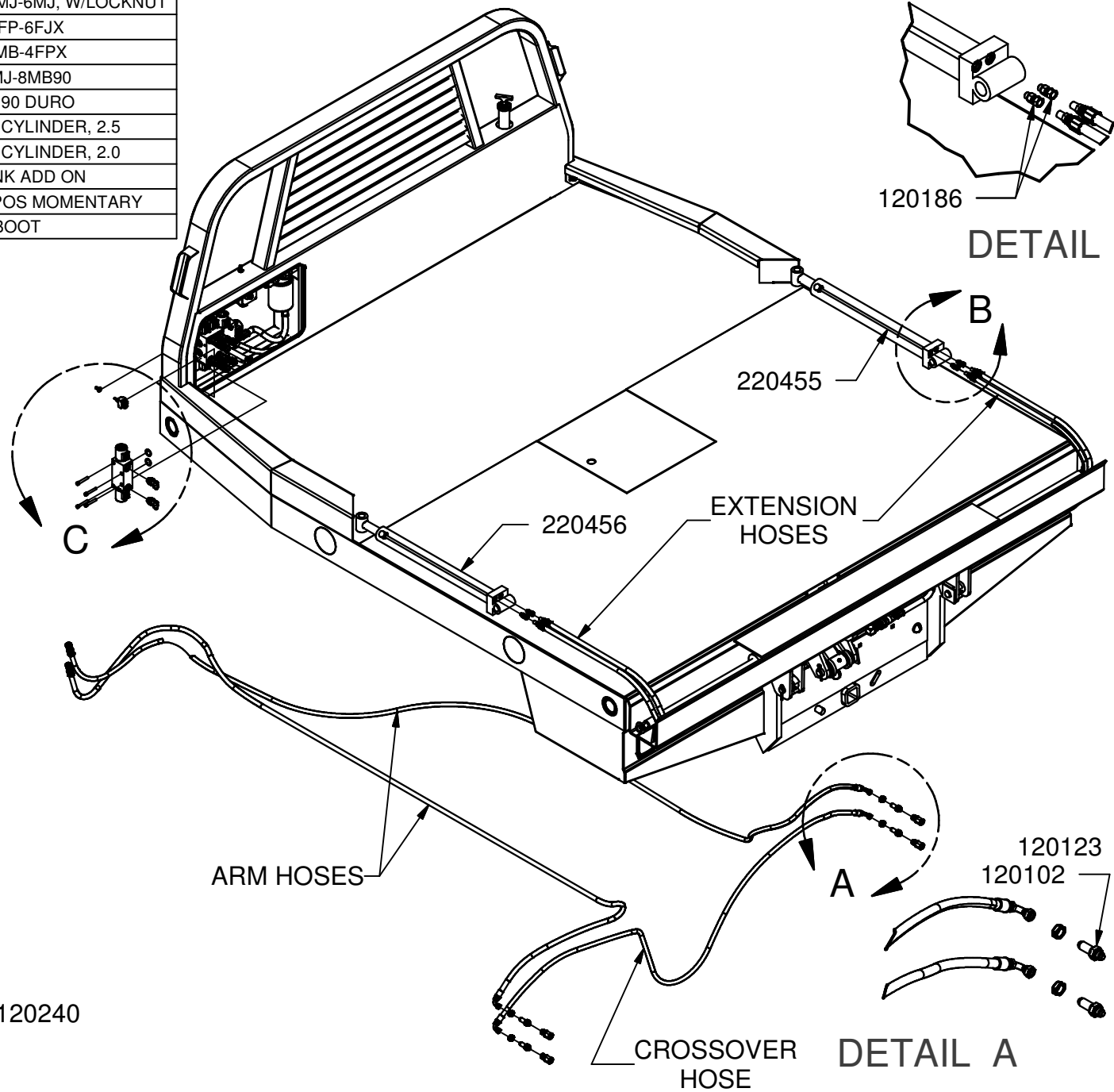

DETAIL B

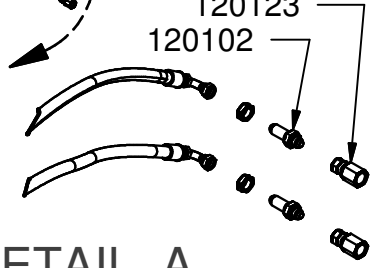

DETAIL A

9/17/03

XRM HYDRAULICS

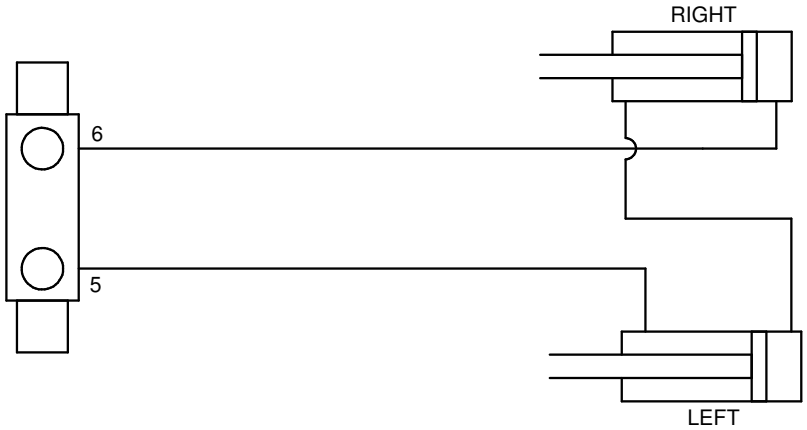

FLATBED XRM SERIES	ARM HOSES 6M3K - 6FJX90M / 6FJX		EXTENSION HOSES 6M3K - 6-4MP / 6MPX		CROSSOVER HOSE 6M3K - 6FJX90M	HYDRAULIC HOSE KIT #
	RIGHT (BLACK)	LEFT (WHITE)	BOTTOM (WHITE)	TOP		
470 XRM	220625 (165in)	220625 (165in)	2ea 220605 (51.31in)	2ea 220605 (51.31in)	220601 (79.62in)	**223011**
475 XRM	220626 (188in)	220626 (188in)	2ea 220605 (51.31in)	2ea 220605 (51.31in)	220601 (79.62in)	**223010**
478 XRM	220626 (188in)	220626 (188in)	2ea 220605 (51.31in)	2ea 220605 (51.31in)	220601 (79.62in)	**223010**
477 XRM	220627 (200in)	220627 (200in)	2ea 220605 (51.31in)	2ea 220605 (51.31in)	220601 (79.62in)	**223009**
480 XRM	220627 (200in)	220627 (200in)	2ea 220605 (51.31in)	2ea 220605 (51.31in)	220601 (79.62in)	**223009**
482 XRM	220627 (200in)	220627 (200in)	2ea 220605 (51.31in)	2ea 220605 (51.31in)	220601 (79.62in)	**223009**
485 XRM	220628 (212in)	220628 (212in)	2ea 220605 (51.31in)	2ea 220605 (51.31in)	220601 (79.62in)	**223008**
487 XRM	220629 (218in)	220629 (218in)	2ea 220605 (51.31in)	2ea 220605 (51.31in)	220601 (79.62in)	**223007**
578	220626 (188in)	220626 (188in)	2ea 220605 (51.31in)	2ea 220605 (51.31in)	220645 (94.0in)	**223021**
582	220627 (200in)	220627 (200in)	2ea 220605 (51.31in)	2ea 220605 (51.31in)	220645 (94.0in)	**223022**
587	220629 (218in)	220629 (218in)	2ea 220605 (51.31in)	2ea 220605 (51.31in)	220645 (94.0in)	**223023**

9/17/03

2 Bank Wiring

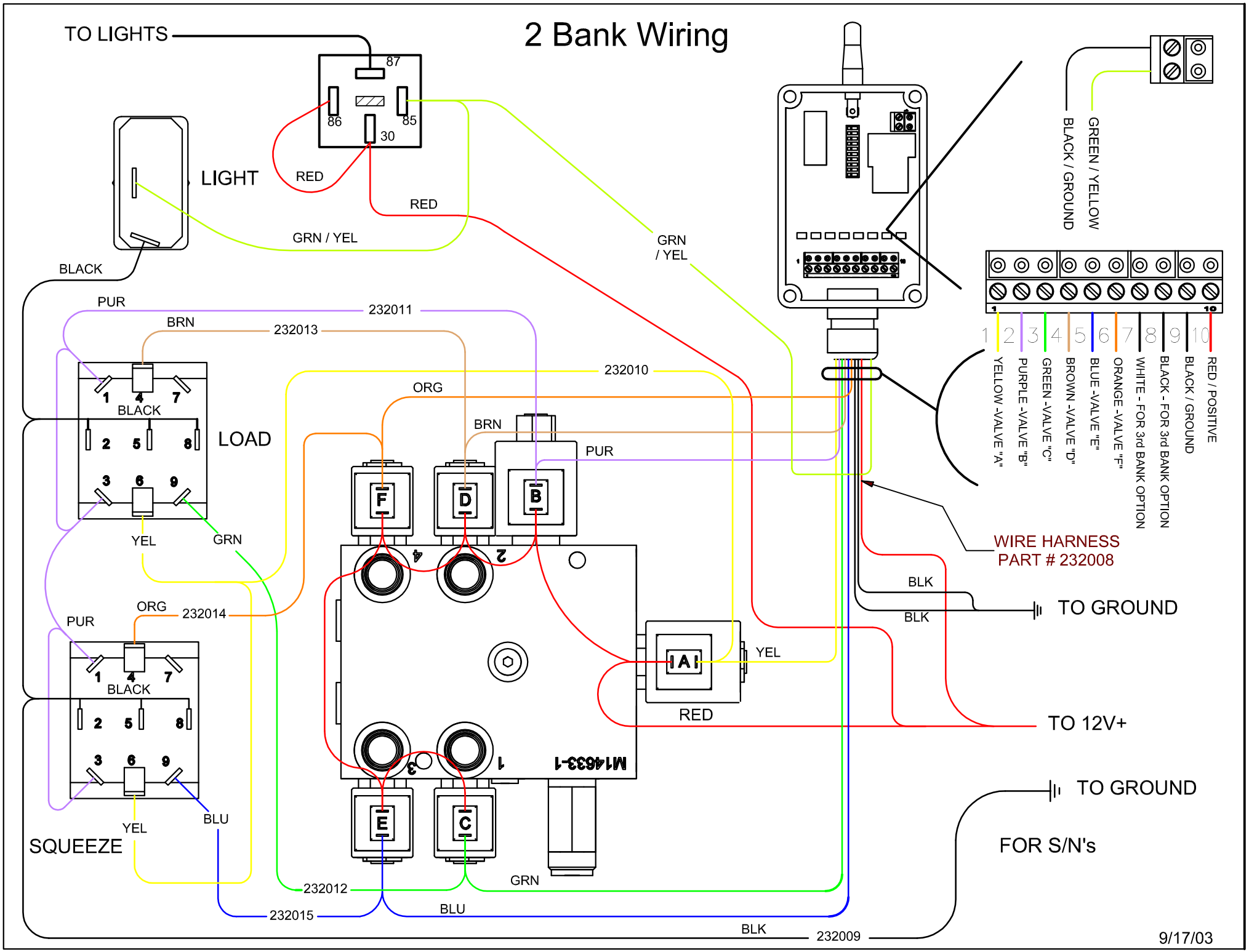

3rd Bank Wiring

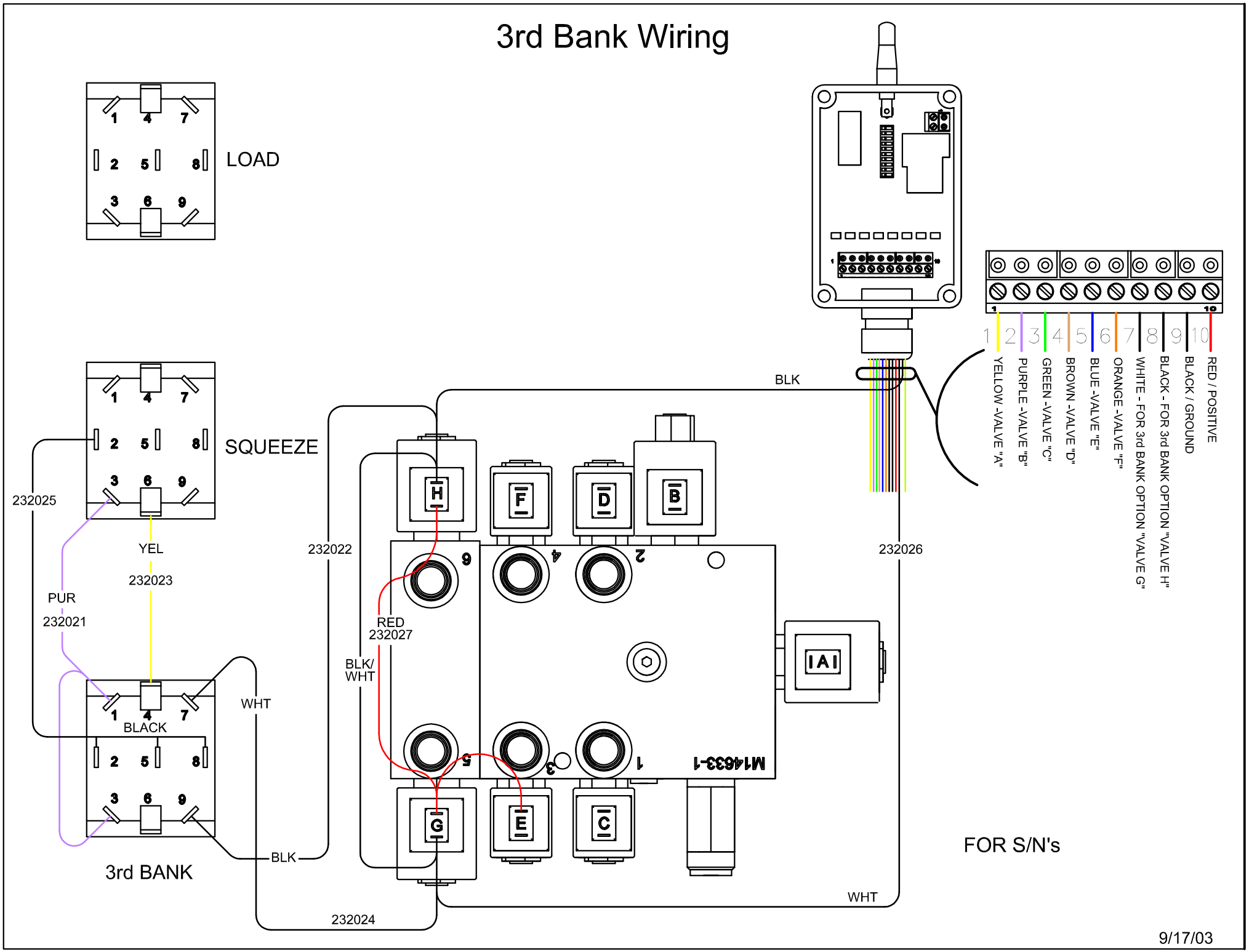

500 SERIES LIGHTS

Parts List		
PART #	QUANTITY	DESCRIPTION
230011	2	LIGHT, LICENSE PLATE
230131	2	LIGHT, BACK-UP
230132	2	LIGHT, SIGNAL-TURN-TAIL
230133	4	LIGHT, CLEARANCE (AMBER)
230134	5	LIGHT, CLEARANCE (RED)
230135	9	GROMMET, 2"
230136	6	GROMMET, 3 X 5

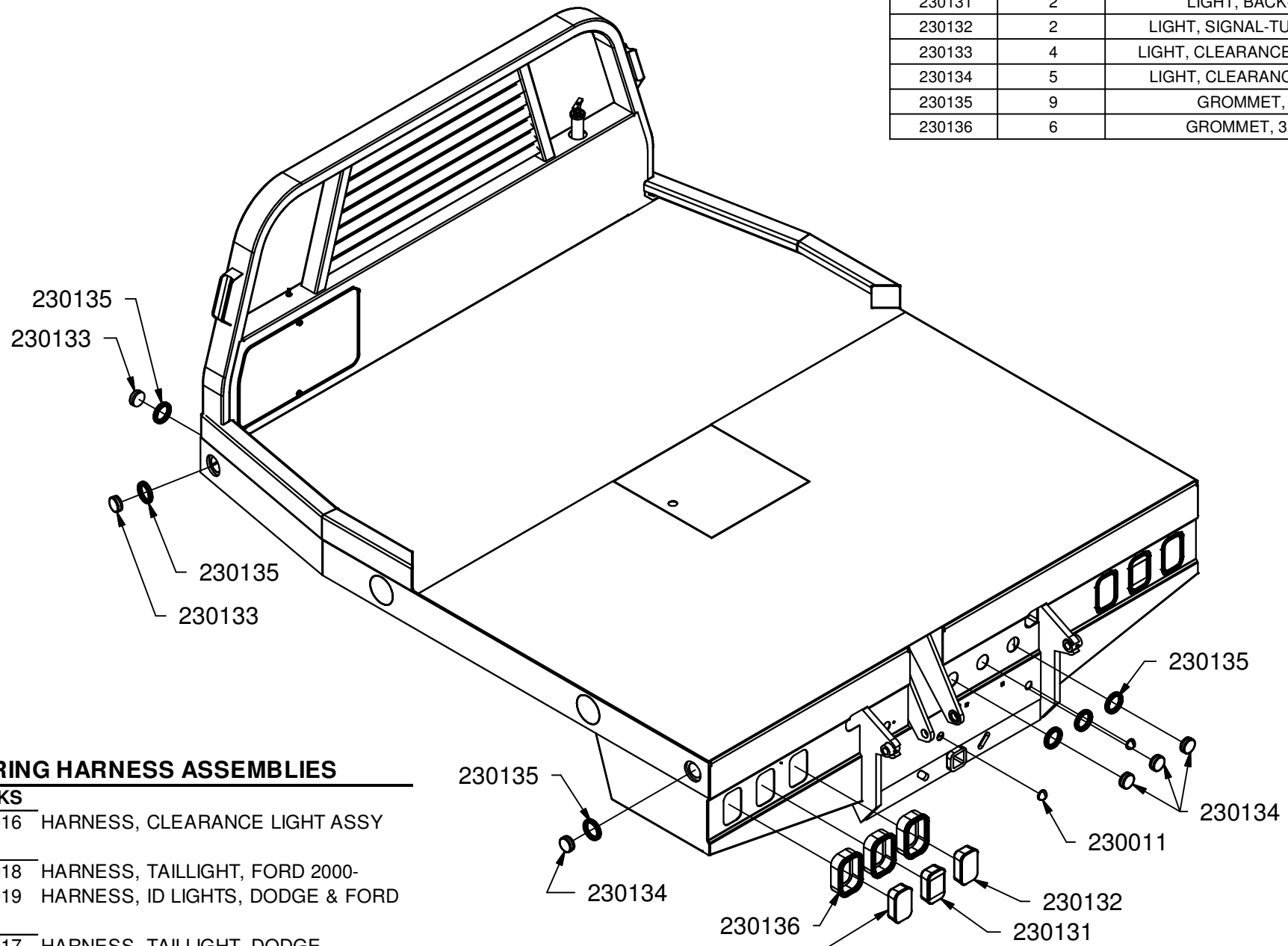

WIRING HARNESS ASSEMBLIES

ALL TRUCKS		
	232016	HARNESS, CLEARANCE LIGHT ASSY
FORD		
2ea	232018	HARNESS, TAILLIGHT, FORD 2000-
1ea	232019	HARNESS, ID LIGHTS, DODGE & FORD
DODGE		
2ea	232017	HARNESS, TAILLIGHT, DODGE
1ea	232019	HARNESS, ID LIGHTS, DODGE & FORD
GM		
1ea	232020	HARNESS, TAILLIGHT, GM 2003-

9/23/03

DECALS

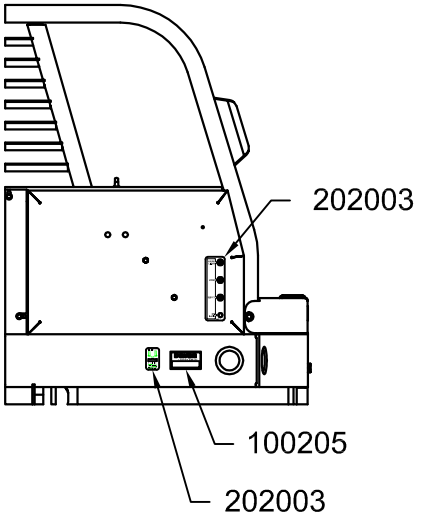

PART #	DESCRIPTION
100205	SERIAL NUMBER PLATE
DECAL KITS	
200211	400 SERIES
200140	400 SERIES XRM
205001	500 SERIES
205002	500 SERIES XRM
MODEL NUMBER SETS	
200193	470
200195	475
200197	477
200199	478
200201	480
200203	482
200205	485
200207	487
200252	578
200253	582
200255	587

PART #	QTY	DESCRIPTION
200010	4	DANGER DECAL, HORIZONTAL
200011	--	SILVER PINSTRIPE
200012	--	RED/SILVER PINSTRIPE
200135	2	XRM DECAL
200137	1	BALE PIK-UP, SILVER SCRIPT
200144	2	DANGER DECAL, VERTICAL
200181	1	DEWEZE, SILVER
200185	1	HUGGER ARM DECAL, LT-RT
200187	--	STRIPING
200189	1	STRIPING, MODEL #
200190	4	REFLECTIVE DECAL
202003	1	DECAL, SWITCH IDENTIFICATION
202004	1	DECAL, RF SCHEMATIC
300002	1	FEMA DECAL

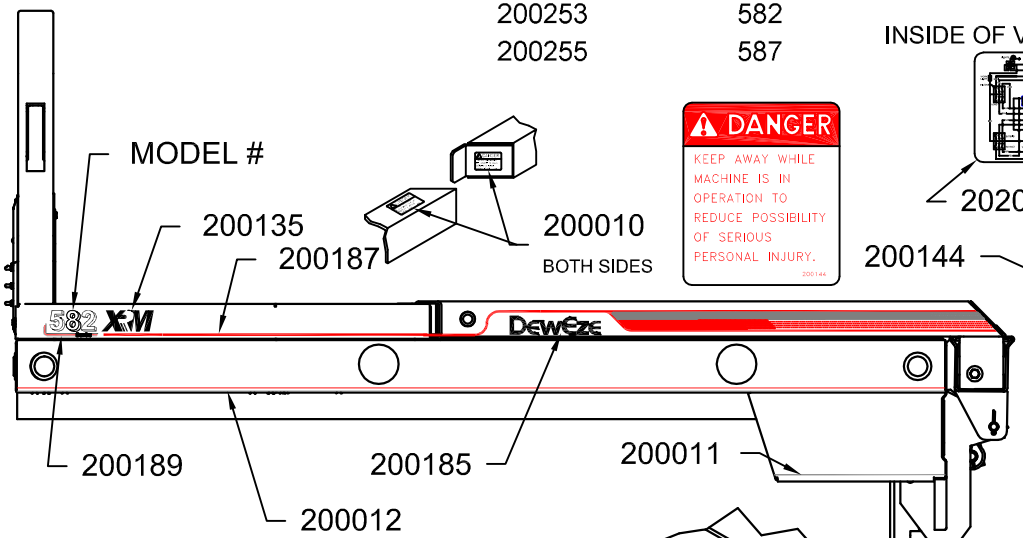

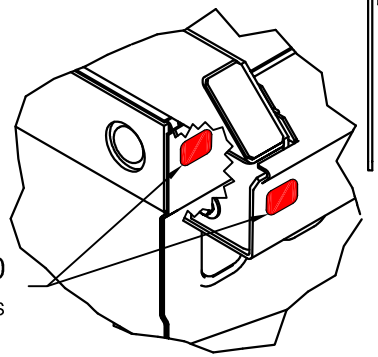

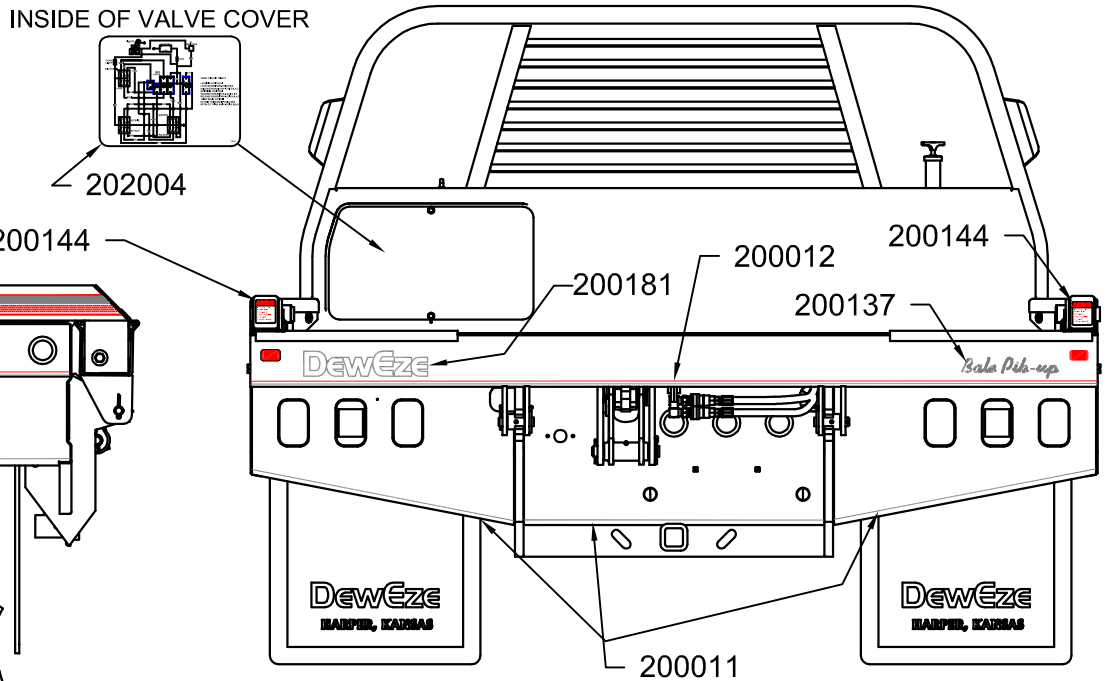

IT IS THE OWNER'S RESPONSIBILITY TO REPLACE MISSING OR DAMAGED WARNING DECALS. DECALS ARE AVAILABLE FROM YOUR DEALER OR FROM THE DEWEZE FACTORY.

9/23/03

OTHER ACCESSORIES

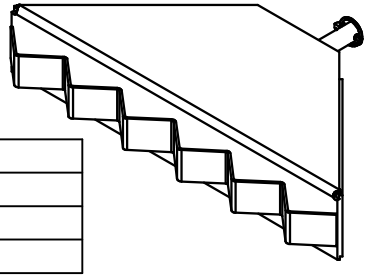

ADAPTER ASSY 210933		
PART #	QTY	DESCRIPTION
210929	2	4' BALE ADAPTER
210006	2	Pin, Lynch 1/4 x 1 1/2

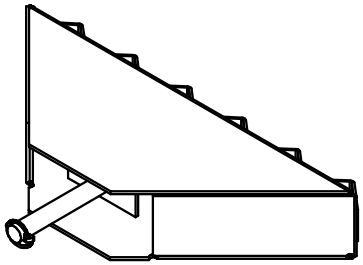

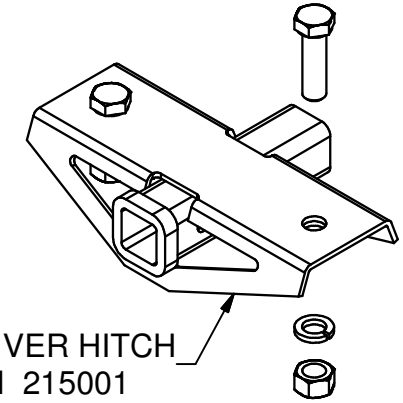

RECEIVER HITCH
P/N 215001

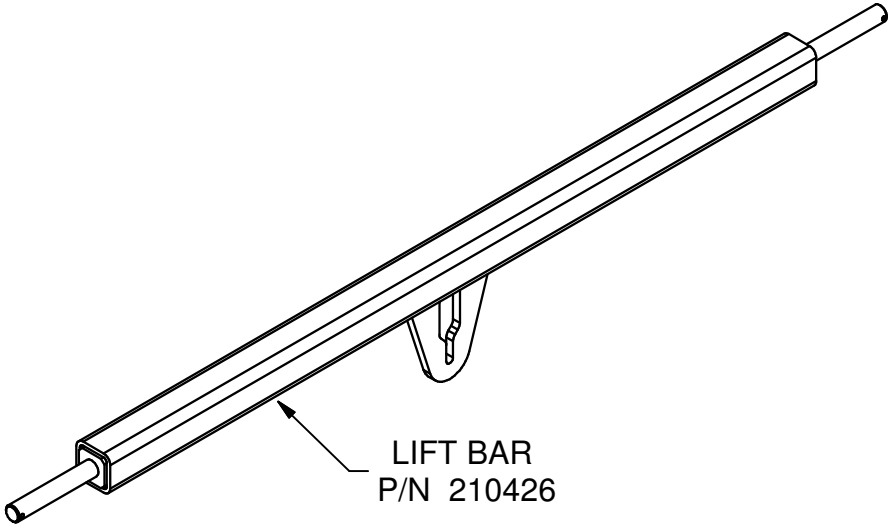

LIFT BAR
P/N 210426

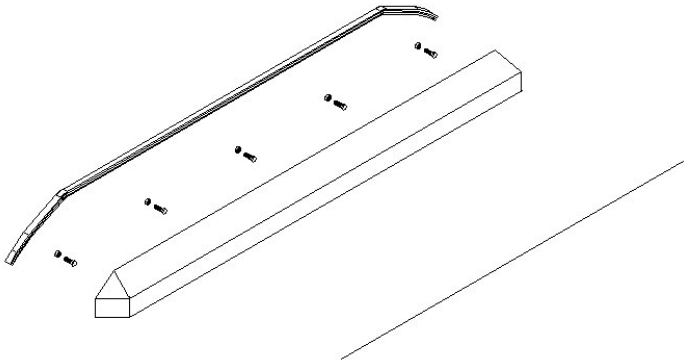

211480 FENDER KIT
211439 FENDER WELDMENT
211481 EDGE TRIM

9/24/03

RF UNIT & MANUAL OVERIDE

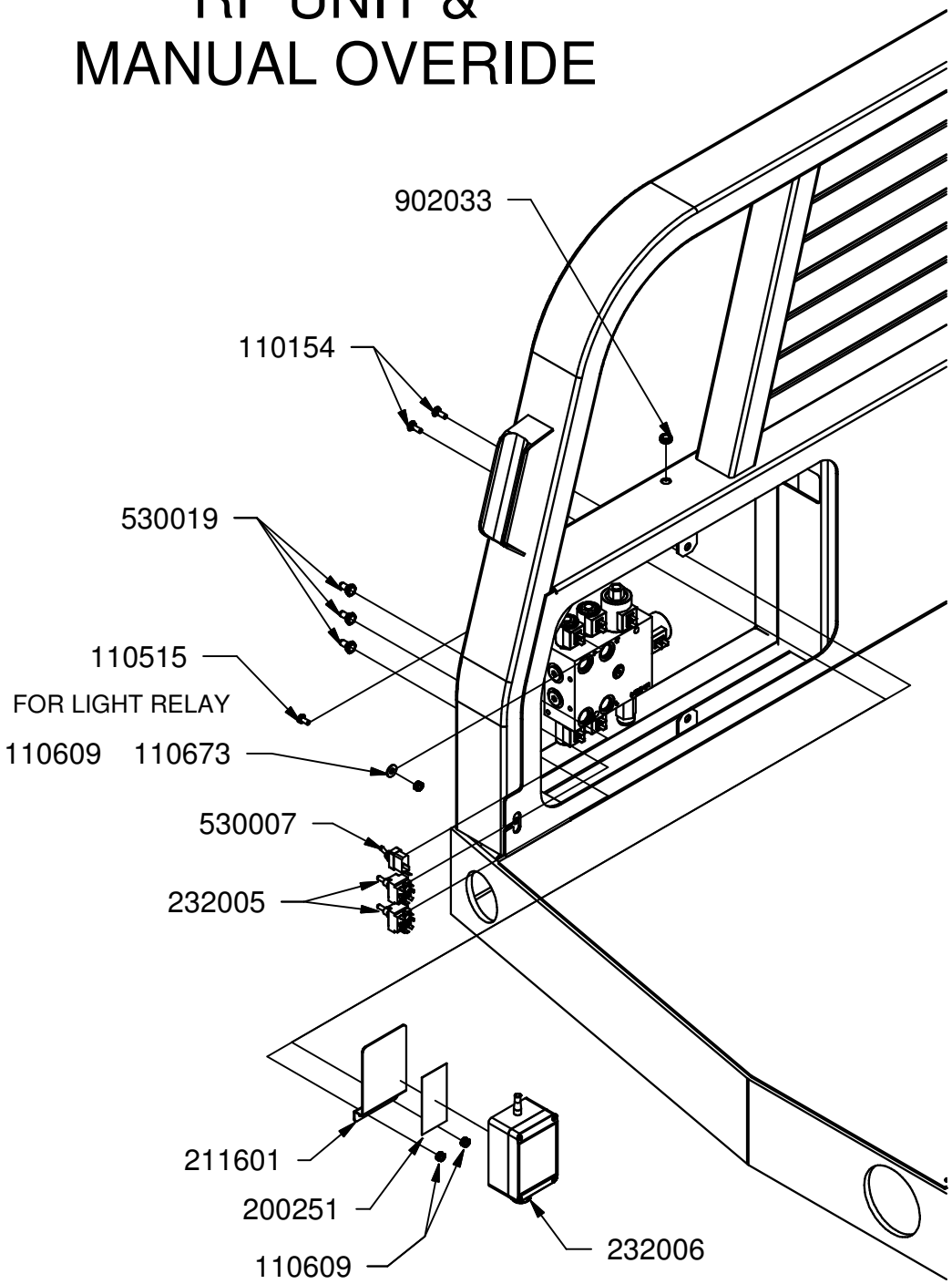

Parts List		
PART #	QUANTITY	DESCRIPTION
110154	2	Bolt, 1/4-20 X 0.75 in Carriage
110515	1	BOLT, 1/4-20 X .50
110609	3	NUT, 1/4-20
110673	1	WASHER, 1/4" FLAT STANDARD
200251	1	RF UNIT MOUNTING TAPE
211601	1	RECEIVER, RF MOUNTING PLATE
232005	2	TOGGLE SWITCH - 3 POS MOMENTARY
232006	1	RECEIVER, RF, DIGITEC
232007	1	TRANSMITTER
530007	1	TOGGLE SWITCH - 2 POS MAINTAINED
530019	3	SWITCH BOOT
902033	1	GROMMET, RUBBER 3/8 ID X 5/8 OD

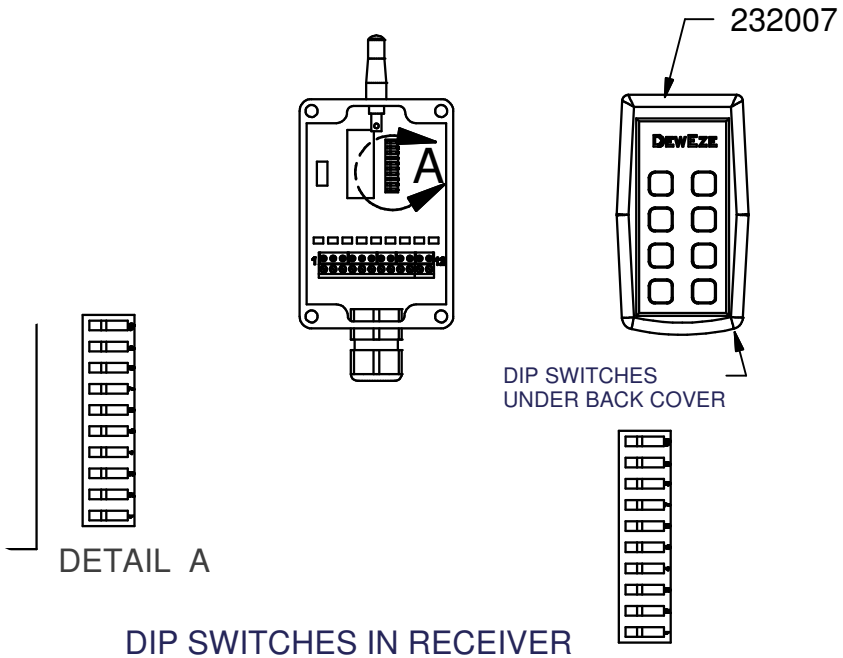

DIP SWITCHES IN RECEIVER AND TRANSMITTER MUST BE SET THE SAME

9/22/03

This equipment has been tested and found to comply with the limits for a Class B digital device, pursuant to Part 15 of the FCC Rules. These limits are designed to provide reasonable protection against harmful interference in a residential installation. This equipment generates, uses, and can radiate radio frequency energy and if not installed and used in accordance with the instructions, may cause harmful interference to radio communications. However, there is no guarantee that interference will not occur in a particular installation. If this equipment does cause harmful interference to radio or television reception, which can be determined by turning the equipment off and on, the user is encouraged to try to correct the interference by one or more of the following measures:

- Ensure that the transmitter has two standard 1.5V AAA batteries placed correctly in enclosure.
- Ensure that the board has no visible moisture or contaminates

This equipment has been certified to comply with the limits for a Class B computing device, pursuant to FCC Rules. Operation with non-approved equipment is likely to result in interference to radio and TV reception. The user is cautioned that changes and modifications made to the equipment without the approval of the manufacturer could void the user's authority to operate this equipment.