ELECTROMAGNETIC EMISSIONS COMPLIANCE REPORT

Applicant:	Telit Communications S.p.A. Via Stazione di Prosecco 5/b 34010 Sgonico - Trieste, Italy
Manufacturer:	Telit Wireless Solutions. Co. Ltd. 13th Fl.,Shinyoung Securities Bld, 6, Gukjegeumyung-ro 8-gil, Yeongdeungpo-gu, Seoul, 07330, South Korea
Product Name:	5G Radio Module
Brand Name:	Telit Cinterion or
Model No.:	FN920C04-WW
Report Number:	TERF2505001834ER
FCC ID	RI7FN920C04WW
Date of EUT Received:	May 28, 2025
Date of Test:	May 29, 2025~June 6, 2025
Issue Date:	June 24, 2025

Approved By _____
Jim Chang

We hereby certify that:

The above equipment was tested by SGS Taiwan Ltd. Central RF Lab The test data, data evaluation, test procedures, and equipment configurations shown in this report were made in accordance with the procedures given in ANSI ANSI C63.26-2015 and the energy emitted by the sample EUT comply with FCC rule part 2, 27 P.

The results of this report relate only to the sample identified in this report.

Unless otherwise stated the results shown in this test report refer only to the sample(s) tested and such sample(s) are retained for 90 days only.
除非另有說明，此報告結果僅對測試之樣品負責，同時此樣品僅保留90天。本報告未經本公司書面許可，不可部份複製。
This document is issued by the Company subject to its General Conditions of Service printed overleaf, available on request or accessible at http://www.sgs.com.tw/Terms-and-Conditions and for electronic format documents, subject to Terms and Conditions for Electronic Documents at http://www.sgs.com.tw/Terms-and-Conditions. Attention is drawn to the limitation of liability, indemnification and jurisdiction issues defined therein. Any holder of this document is advised that information contained hereon reflects the Company's findings at the time of its intervention only and within the limits of Client's instructions, if any. The Company's sole responsibility is to its Client and this document does not exonerate parties to a transaction from exercising all their rights and obligations under the transaction documents. This document cannot be reproduced except in full, without prior written approval of the Company. Any unauthorized alteration, forgery or falsification of the content or appearance of this document is unlawful and offenders may be prosecuted to the fullest extent of the law.

Revision History

Report Number	Revision	Description	Issue Date	Revised By	Remark
TERF2505001834ER	00	Add LTE Band 106	June 24, 2025	Karen Huang	

Note:

1、 The remark "*" indicates modification of the report upon requests from certification body.

2、 This test report is an addendum to the original test report **TERF2410003182ER**.

Unless otherwise stated the results shown in this test report refer only to the sample(s) tested and such sample(s) are retained for 90 days only.
除非另有說明，此報告結果僅對測試之樣品負責，同時此樣品僅保留90天。本報告未經本公司書面許可，不可部份複製。
This document is issued by the Company subject to its General Conditions of Service printed overleaf, available on request or accessible at http://www.sgs.com.tw/Terms-and-Conditions and for electronic format documents, subject to Terms and Conditions for Electronic Documents at http://www.sgs.com.tw/Terms-and-Conditions. Attention is drawn to the limitation of liability, indemnification and jurisdiction issues defined therein. Any holder of this document is advised that information contained hereon reflects the Company's findings at the time of its intervention only and within the limits of Client's instructions, if any. The Company's sole responsibility is to its Client and this document does not exonerate parties to a transaction from exercising all their rights and obligations under the transaction documents. This document cannot be reproduced except in full, without prior written approval of the Company. Any unauthorized alteration, forgery or falsification of the content or appearance of this document is unlawful and offenders may be prosecuted to the fullest extent of the law.

Contents

1 GENERAL PRODUCT INFORMATION 4
2 SYSTEM TEST CONFIGURATION 7
3 SUMMARY OF TEST RESULTS 9
4 DESCRIPTION OF TEST MODES 10
5 MEASUREMENT UNCERTAINTY 11
6 MEASUREMENT EQUIPMENT USED 12
7 STANDARD APPLICABLE 14
8 TEST SETUP 16
9 TEST PROCEDURE 19
10 MEASUREMENT RESULTS 21

Unless otherwise stated the results shown in this test report refer only to the sample(s) tested and such sample(s) are retained for 90 days only.
除非另有說明，此報告結果僅對測試之樣品負責，同時此樣品僅保留90天。本報告未經本公司書面許可，不可部份複製。
This document is issued by the Company subject to its General Conditions of Service printed overleaf, available on request or accessible at http://www.sgs.com.tw/Terms-and-Conditions and for electronic format documents, subject to Terms and Conditions for Electronic Documents at http://www.sgs.com.tw/Terms-and-Conditions. Attention is drawn to the limitation of liability, indemnification and jurisdiction issues defined therein. Any holder of this document is advised that information contained hereon reflects the Company's findings at the time of its intervention only and within the limits of Client's instructions, if any. The Company's sole responsibility is to its Client and this document does not exonerate parties to a transaction from exercising all their rights and obligations under the transaction documents. This document cannot be reproduced except in full, without prior written approval of the Company. Any unauthorized alteration, forgery or falsification of the content or appearance of this document is unlawful and offenders may be prosecuted to the fullest extent of the law.

1 GENERAL PRODUCT INFORMATION

1.1 Product Description

Product Name:	5G Radio Module
Brand Name:	Telit Cinterion or
Model No.:	FN920C04-WW
Hardware Version:	1.10
Firmware Version:	M0V.060001
EUT Series No.:	355411761007840, 355411761007848
Power Supply:	3.3Vdc
Test Software (Name/Version)	Connect with call box

1.2 Operation Frequency Range

LTE Band 106	
BW (MHz)	Operation Frequency (MHz)
1.4	898.2 - 899.8
3	899.0

1.3 Antenna Designation

Antenna Type	Antenna Model No.
Monopole	TG.55.8113
Note: Transmission frequencies in this test report are only available by the above antenna(s).	

LTE Band	Frequency (MHz)	Peak Gain (dBi)	Insertion Loss	Final Gain (dBi)
LTE Band 106	896~901	0.58	0.2	0.38

Note: The antenna information is provided by the applicant, and the laboratory shall not be held liable for the accuracy, completeness, or reliability of any applicant-supplied data.

Unless otherwise stated the results shown in this test report refer only to the sample(s) tested and such sample(s) are retained for 90 days only.
除非另有說明，此報告結果僅對測試之樣品負責，同時此樣品僅保留90天。本報告未經本公司書面許可，不可部份複製。
This document is issued by the Company subject to its General Conditions of Service printed overleaf, available on request or accessible at http://www.sgs.com.tw/Terms-and-Conditions and for electronic format documents, subject to Terms and Conditions for Electronic Documents at http://www.sgs.com.tw/Terms-and-Conditions. Attention is drawn to the limitation of liability, indemnification and jurisdiction issues defined therein. Any holder of this document is advised that information contained hereon reflects the Company's findings at the time of its intervention only and within the limits of Client's instructions, if any. The Company's sole responsibility is to its Client and this document does not exonerate parties to a transaction from exercising all their rights and obligations under the transaction documents. This document cannot be reproduced except in full, without prior written approval of the Company. Any unauthorized alteration, forgery or falsification of the content or appearance of this document is unlawful and offenders may be prosecuted to the fullest extent of the law.

1.4 Type of Emission & Max ERP/EIRP Power Measurement Result:

LTE Band	BW	Frequency		Modulation	ERP / EIRP (dBm)		(W)	99%	Type of Emission
106	1.4	898.2	899.8	QPSK	21.19	ERP	**0.132**	1.0896	1M09G7D
				16QAM	20.41	ERP	**0.110**	1.0941	1M09D7W
				64QAM	20.24	ERP	**0.106**	1.0913	1M09D7W
				256QAM	16.32	ERP	**0.043**	1.0932	1M09D7W
106	3	899.0	899.0	QPSK	21.18	ERP	0.131	2.7009	2M70G7D
				16QAM	20.26	ERP	0.106	2.6927	2M69D7W
				64QAM	19.31	ERP	0.085	2.6953	2M70D7W
				256QAM	16.31	ERP	0.043	2.6978	2M70D7W

Unless otherwise stated the results shown in this test report refer only to the sample(s) tested and such sample(s) are retained for 90 days only.
除非另有說明，此報告結果僅對測試之樣品負責，同時此樣品僅保留90天。本報告未經本公司書面許可，不可部份複製。
This document is issued by the Company subject to its General Conditions of Service printed overleaf, available on request or accessible at http://www.sgs.com.tw/Terms-and-Conditions and for electronic format documents, subject to Terms and Conditions for Electronic Documents at http://www.sgs.com.tw/Terms-and-Conditions. Attention is drawn to the limitation of liability, indemnification and jurisdiction issues defined therein. Any holder of this document is advised that information contained hereon reflects the Company's findings at the time of its intervention only and within the limits of Client's instructions, if any. The Company's sole responsibility is to its Client and this document does not exonerate parties to a transaction from exercising all their rights and obligations under the transaction documents. This document cannot be reproduced except in full, without prior written approval of the Company. Any unauthorized alteration, forgery or falsification of the content or appearance of this document is unlawful and offenders may be prosecuted to the fullest extent of the law.

1.5 Test Methodology of Applied Standards

FCC 47 CFR Part 2, 27P.
ANSI C63.26-2015
KDB971168 D01 Power Meas license Digital System v03r01
KDB412172 D01 Determining ERP and EIRP v01r01

1.6 Test Facility

Laboratory	Test Site Address	Test Site Name	FCC Designation number	IC CAB identifier
SGS Taiwan Ltd. Central RF Lab. (TAF code 3702)	No.134, Wu Kung Road, New Taipei Industrial Park, Wuku District, New Taipei City, Taiwan.	SAC 1	TW0027	TW3702
		SAC 2		
		SAC 3		
		Conduction 1		
		Conducted 1		
		Conducted 2		
		Conducted 3		
		Conducted 4		
		Conducted 5		
		Conducted 6		
	No.2, Keji 1st Rd., Guishan District, Taoyuan City, Taiwan 333	Conduction C	TW0028	
		SAC C		
		SAC D		
		SAC G		
		Conducted A		
		Conducted B		
		Conducted C		
		Conducted D		
		Conducted E		
		Conducted F		
		Conducted G		
Note: Test site name is remarked on the equipment list in each section of this report as an indication where measurements occurred in specific test site and address.				

1.7 Special Accessories

No special accessories were used during testing.

1.8 Equipment Modifications

There was no modifications incorporated into the EUT.

1.9 Radiated Emission Test Sites For Measurements From 9 kHz To 30 MHz

Radiated emission below 30MHz is measured in a 9m*6m*6m semi-anechoic chamber, the measurements correspond to those obtained at an open-field test site.
There is a comparison data of both open-field test site and semi-Anechoic chamber, and the result came out very similar.

Unless otherwise stated the results shown in this test report refer only to the sample(s) tested and such sample(s) are retained for 90 days only.
除非另有說明，此報告結果僅對測試之樣品負責，同時此樣品僅保留90天。本報告未經本公司書面許可，不可部份複製。
This document is issued by the Company subject to its General Conditions of Service printed overleaf, available on request or accessible at http://www.sgs.com.tw/Terms-and-Conditions and for electronic format documents, subject to Terms and Conditions for Electronic Documents at http://www.sgs.com.tw/Terms-and-Conditions. Attention is drawn to the limitation of liability, indemnification and jurisdiction issues defined therein. Any holder of this document is advised that information contained hereon reflects the Company's findings at the time of its intervention only and within the limits of Client's instructions, if any. The Company's sole responsibility is to its Client and this document does not exonerate parties to a transaction from exercising all their rights and obligations under the transaction documents. This document cannot be reproduced except in full, without prior written approval of the Company. Any unauthorized alteration, forgery or falsification of the content or appearance of this document is unlawful and offenders may be prosecuted to the fullest extent of the law.

2 SYSTEM TEST CONFIGURATION

2.1 EUT Configuration

The EUT configuration for testing is installed on RF field strength measurement to meet the Commissions requirement and operating in a manner which intends to maximize its emission characteristics in a continuous normal application.

2.2 EUT Exercise

The EUT (Transmitter) was operated in the continuous transmission mode employed with the simulator of the Base Station that fixates at test default channels to fix the Tx frequency which was for the purpose of the measurements.

2.3 Test Procedure

2.3.1 Conducted Measurement at Antenna Port

The EUT is placed on a table which is 0.8 m above ground plane. A low loss of RF cable was used to connect the antenna port of EUT to measurement equipment.

2.3.2 Radiated Emissions (ERP/EIRP)

The EUT is placed on a turn table, for emission measurements below 1 GHz is 0.8 m above ground plane, for emission measurements above 1 GHz, the table height shall be 1.5 m. The turn table shall rotate 360 degrees to determine the position of maximum emission level. EUT is set 3m away from the receiving antenna which varied from 1m to 4m to find out the highest emission. And also, each emission was to be maximized by changing the polarization of receiving antenna both Horizontal and Vertical. In order to find out the max. emission, the relative positions of this transmitter (EUT) was rotated through three orthogonal axes and measurement procedures for electric field radiated emissions above 1 GHz the EUT measurement is to be made “while keeping the antenna in the ‘cone of radiation’ from that area and pointed at the area both in azimuth and elevation, with polarization oriented for maximum response.” is still within the 3dB illumination BW of the measurement antenna.

2.4 Measurement Results Explanation Example

For all conducted test items:
The offset level is set in the spectrum analyzer to compensate the RF cable loss and attenuation factor between EUT conducted port and spectrum analyzer. With the offset compensation, the spectrum analyzer reading level is exactly EUT RF output level.
Note:
The spectrum analyzer offset is derived from RF cable loss and attenuator factor.

2.5 Final Amplifier Voltage and Current Information:

LTE Band 106		
Test mode	DC voltage (V)	DC current (mA)
LTE Band 106_3M QPSK	3.3	830

Unless otherwise stated the results shown in this test report refer only to the sample(s) tested and such sample(s) are retained for 90 days only.
除非另有說明，此報告結果僅對測試之樣品負責，同時此樣品僅保留90天。本報告未經本公司書面許可，不可部份複製。
This document is issued by the Company subject to its General Conditions of Service printed overleaf, available on request or accessible at http://www.sgs.com.tw/Terms-and-Conditions and for electronic format documents, subject to Terms and Conditions for Electronic Documents at http://www.sgs.com.tw/Terms-and-Conditions. Attention is drawn to the limitation of liability, indemnification and jurisdiction issues defined therein. Any holder of this document is advised that information contained hereon reflects the Company’s findings at the time of its intervention only and within the limits of Client’s instructions, if any. The Company’s sole responsibility is to its Client and this document does not exonerate parties to a transaction from exercising all their rights and obligations under the transaction documents. This document cannot be reproduced except in full, without prior written approval of the Company. Any unauthorized alteration, forgery or falsification of the content or appearance of this document is unlawful and offenders may be prosecuted to the fullest extent of the law.

2.6 Test Configuration

Conducted Setup	Radiated Setup
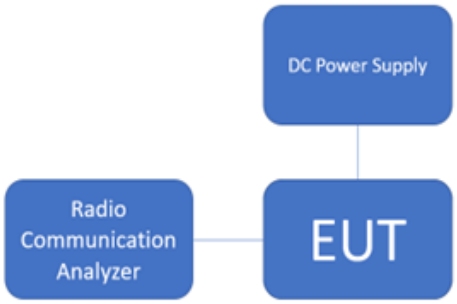	

Note: Radio Communication Analyzer is placed in remote side for radiated test.

Unless otherwise stated the results shown in this test report refer only to the sample(s) tested and such sample(s) are retained for 90 days only.
除非另有說明，此報告結果僅對測試之樣品負責，同時此樣品僅保留90天。本報告未經本公司書面許可，不可部份複製。
This document is issued by the Company subject to its General Conditions of Service printed overleaf, available on request or accessible at http://www.sgs.com.tw/Terms-and-Conditions and for electronic format documents, subject to Terms and Conditions for Electronic Documents at http://www.sgs.com.tw/Terms-and-Conditions. Attention is drawn to the limitation of liability, indemnification and jurisdiction issues defined therein. Any holder of this document is advised that information contained hereon reflects the Company's findings at the time of its intervention only and within the limits of Client's instructions, if any. The Company's sole responsibility is to its Client and this document does not exonerate parties to a transaction from exercising all their rights and obligations under the transaction documents. This document cannot be reproduced except in full, without prior written approval of the Company. Any unauthorized alteration, forgery or falsification of the content or appearance of this document is unlawful and offenders may be prosecuted to the fullest extent of the law.

3 SUMMARY OF TEST RESULTS

FCC Rules	Description Of Test	Result
§2.1046(a)	RF Power Output	Compliant
§27.1507(a)(4)	ERP/ EIRP measurement	Compliant
§2.1049(h)	99% & 26dB Occupied Bandwidth	Compliant
§2.1051 §27.1509	Out of Band Emissions at Antenna Terminals and Band Edge / Emission mask require-ments	Compliant
§2.1053 §27.1508	Field Strength of Spurious Radiation	Compliant
§27.1507(d)	Peak to Average Ratio	Compliant
§2.1055(a)(1) §27.54	Frequency Stability	Compliant

Unless otherwise stated the results shown in this test report refer only to the sample(s) tested and such sample(s) are retained for 90 days only.
除非另有說明，此報告結果僅對測試之樣品負責，同時此樣品僅保留90天。本報告未經本公司書面許可，不可部份複製。
This document is issued by the Company subject to its General Conditions of Service printed overleaf, available on request or accessible at http://www.sgs.com.tw/Terms-and-Conditions and for electronic format documents, subject to Terms and Conditions for Electronic Documents at http://www.sgs.com.tw/Terms-and-Conditions. Attention is drawn to the limitation of liability, indemnification and jurisdiction issues defined therein. Any holder of this document is advised that information contained hereon reflects the Company's findings at the time of its intervention only and within the limits of Client's instructions, if any. The Company's sole responsibility is to its Client and this document does not exonerate parties to a transaction from exercising all their rights and obligations under the transaction documents. This document cannot be reproduced except in full, without prior written approval of the Company. Any unauthorized alteration, forgery or falsification of the content or appearance of this document is unlawful and offenders may be prosecuted to the fullest extent of the law.

4 DESCRIPTION OF TEST MODES

4.1 The Worst Test Modes and Channel Details

1. The EUT has been tested under operating condition.
2. Pre-Scan has been conducted to determine the worst-case scenario from all possible combinations among available modulations, data rates and antenna ports, the worst case configurations listed below for the final test.
3. The field strength of radiated emission was measured as the EUT positioned in different orthogonal planes (E1/E2/H) based on actual usage of the EUT to pre-scan the emissions for determining the worst case scenario.

4.2 Measurement Configuration

Test Items	Max. Output Power												
Band	Bandwidth (MHz)						Modulation				RB #		
	1.4	3	5	10	15	20	QPSK	16QAM	64QAM	256QAM	1	Half	Full
106	v	v	-	-	-	-	v	v	v	v	v	v	v
Test Items	Freqency Stability												
106	-	v	-	-	-	-	v	-	-	-	-	-	v
Test Items	26dB and 99% Bandwidth												
Band	Bandwidth (MHz)						Modulation				RB #		
	1.4	3	5	10	15	20	QPSK	16QAM	64QAM	256QAM	1	Half	Full
106	v	v	-	-	-	-	v	v	v	v	-	-	v
Test Items	Peak-to-Av erage Ratio												
106	v	v	-	-	-	-	-	-	-	v	-	-	v
Test Items	Band Edge												
Band	Bandwidth (MHz)						Modulation				RB #		
	1.4	3	5	10	15	20	QPSK	16QAM	64QAM	256QAM	1	Half	Full
106	v	v	-	-	-	-	v	-	-	-	v	-	v
Test Items	Conducted Emission												
106	v	-	-	-	-	-	v	-	-	-	v	-	-
Test Items	Radiated Emission												
Band	Bandwidth (MHz)						Modulation				RB #		
	1.4	3	5	10	15	20	QPSK	16QAM	64QAM	256QAM	1	Half	Full
106	v	-	-	-	-	-	v	-	-	-	v	-	-

Unless otherwise stated the results shown in this test report refer only to the sample(s) tested and such sample(s) are retained for 90 days only.
除非另有說明，此報告結果僅對測試之樣品負責，同時此樣品僅保留90天。本報告未經本公司書面許可，不可部份複製。
This document is issued by the Company subject to its General Conditions of Service printed overleaf, available on request or accessible at http://www.sgs.com.tw/Terms-and-Conditions and for electronic format documents, subject to Terms and Conditions for Electronic Documents at http://www.sgs.com.tw/Terms-and-Conditions. Attention is drawn to the limitation of liability, indemnification and jurisdiction issues defined therein. Any holder of this document is advised that information contained hereon reflects the Company's findings at the time of its intervention only and within the limits of Client's instructions, if any. The Company's sole responsibility is to its Client and this document does not exonerate parties to a transaction from exercising all their rights and obligations under the transaction documents. This document cannot be reproduced except in full, without prior written approval of the Company. Any unauthorized alteration, forgery or falsification of the content or appearance of this document is unlawful and offenders may be prosecuted to the fullest extent of the law.

5 MEASUREMENT UNCERTAINTY

Test Items	Uncertainty		
Power Density	+/-	0.61	dB
Output Power measurement	+/-	0.97	dB
ERP/ EIRP measurement	+/-	2.16	dB
	+/-	2.16	dB
Emission Bandwidth	+/-	1.38	Hz
Out of Band Emissions at Antenna Terminals and Band Edge	+/-	0.77	dB
Peak to Average Ratio	+/-	0.97	dB
Frequency Stability vs. Temperature	+/-	1.48	Hz
Frequency Stability vs. Voltage	+/-	1.48	Hz
Temperature	+/-	0.6	°C
Humidity	+/-	3	%
DC / AC Power Source	+/-	1	%

Radiated Spurious Emission Measurement Uncertainty				
Polarization: Vertical	**+/-**	**1.89**	**dB**	9kHz~30MHz
	+/-	**4.1**	**dB**	30MHz - 1000MHz
	+/-	**3.37**	**dB**	1GHz - 18GHz
	+/-	**3.83**	**dB**	18GHz - 40GHz
Polarization: Horizontal	**+/-**	**1.89**	**dB**	9kHz~30MHz
	+/-	**4.1**	**dB**	30MHz - 1000MHz
	+/-	**3.37**	**dB**	1GHz - 18GHz
	+/-	**3.83**	**dB**	18GHz - 40GHz
Radiated Spurious Emission	**+/-**	**2**	**dB**	33GHz-50GHz
	+/-	**1.59**	**dB**	50GHz-60GHz
	+/-	**1.71**	**dB**	60GHz-90GHz
	+/-	**1.64**	**dB**	90GHz-140GHz
	+/-	**3.84**	**dB**	140GHz-220GHz

This uncertainty represents an expanded uncertainty expressed at approximately the 95% confidence level using a coverage factor of k=2.

Unless otherwise stated the results shown in this test report refer only to the sample(s) tested and such sample(s) are retained for 90 days only.
除非另有說明，此報告結果僅對測試之樣品負責，同時此樣品僅保留90天。本報告未經本公司書面許可，不可部份複製。
This document is issued by the Company subject to its General Conditions of Service printed overleaf, available on request or accessible at http://www.sgs.com.tw/Terms-and-Conditions and for electronic format documents, subject to Terms and Conditions for Electronic Documents at http://www.sgs.com.tw/Terms-and-Conditions. Attention is drawn to the limitation of liability, indemnification and jurisdiction issues defined therein. Any holder of this document is advised that information contained hereon reflects the Company's findings at the time of its intervention only and within the limits of Client's instructions, if any. The Company's sole responsibility is to its Client and this document does not exonerate parties to a transaction from exercising all their rights and obligations under the transaction documents. This document cannot be reproduced except in full, without prior written approval of the Company. Any unauthorized alteration, forgery or falsification of the content or appearance of this document is unlawful and offenders may be prosecuted to the fullest extent of the law.

6 MEASUREMENT EQUIPMENT USED

6.1 Conducted Measurement

Conducted Emission Test Site: Conducted 4					
EQUIPMENT TYPE	MFR	MODEL NUMBER	SERIAL NUMBER	LAST CAL. (mm/dd/yyyy)	CAL DUE. (mm/dd/yyyy)
Attenuator	Mini-Circuits	BW-S10W2+	8	12/11/2024	12/10/2025
DC Block	Mini-Circuits	BLK-18-S+	14	12/11/2024	12/10/2025
DC Power Supply	Gwinstek	SPS-3610	GEV856761	09/13/2024	09/12/2025
PXA Spectrum Analyzer	Agilent	N9030A	MY53120760	04/25/2025	04/24/2026
EXA Spectrum Analyzer	KEYSIGHT	N9010B	MY60240503	12/16/2024	12/15/2025
Radio Communication Analyzer	Anritsu	MT8821C	6262044751	11/04/2024	11/03/2025
Splitter	RF-Lambda	RFLT2W1G18G	11-JSPF412-018	12/11/2024	12/10/2025
Temperature Chamber	Giant Force	GTH-150-40-CP-AR	MAA0512-018	06/05/2024	06/04/2025
Temperature Chamber	Giant Force	GTH-150-40-CP-AR	MAA0512-018	06/04/2025	06/03/2026
Test Software	SGS	Radio Test Software	Ver. 21	N.C.R	N.C.R

Unless otherwise stated the results shown in this test report refer only to the sample(s) tested and such sample(s) are retained for 90 days only.
除非另有說明，此報告結果僅對測試之樣品負責，同時此樣品僅保留90天。本報告未經本公司書面許可，不可部份複製。
This document is issued by the Company subject to its General Conditions of Service printed overleaf, available on request or accessible at http://www.sgs.com.tw/Terms-and-Conditions and for electronic format documents, subject to Terms and Conditions for Electronic Documents at http://www.sgs.com.tw/Terms-and-Conditions. Attention is drawn to the limitation of liability, indemnification and jurisdiction issues defined therein. Any holder of this document is advised that information contained hereon reflects the Company's findings at the time of its intervention only and within the limits of Client's instructions, if any. The Company's sole responsibility is to its Client and this document does not exonerate parties to a transaction from exercising all their rights and obligations under the transaction documents. This document cannot be reproduced except in full, without prior written approval of the Company. Any unauthorized alteration, forgery or falsification of the content or appearance of this document is unlawful and offenders may be prosecuted to the fullest extent of the law.

6.2 Radiated Measurement

Radiated Emission Test Site: SAC 1					
EQUIPMENT TYPE	MFR	MODEL NUMBER	SERIAL NUMBER	LAST CAL. (mm/dd/yyyy)	CAL DUE. (mm/dd/yyyy)
1G High Pass Filter	Micro-Tronics	HPM50108	32	12/11/2024	12/10/2025
Band Reject Filter 635-920	Titan	T04N63592050S01	23040703-4	12/11/2024	12/10/2025
Bi-log Antenna	SCHWARZBECK	VULB9168	1208	07/17/2024	07/16/2025
Bi-log Antenna	TESEO	CBL 6112D	35242 & AT-N0555	12/09/2024	12/08/2025
Coaxial Cable	EMCI	EMC104-SM-SM-8000+EMC106-SM-SM-7600	RX Cable 9K-18G(160125+150817)	08/30/2024	08/29/2025
Coaxial Cables	Huber Suhner	SUCOFLEX 102+SUCOFLEX 106	TX Cable 30M-40G 23051/2+76096/6+22962/2	08/30/2024	08/29/2025
DC Power Supply	Gwinstek	SPS-3610	GEW902152	01/22/2025	01/21/2026
EXA Spectrum Analyzer	KEYSIGHT	N9010B	MY60242081	10/23/2024	10/22/2025
Horn Antenna	ETS.LINDGREN	3117	143271	01/09/2025	01/08/2026
Horn Antenna	RF SPIN	DRH0844	LE2D05A0844	07/10/2024	07/09/2025
Horn Antenna	SCHWARZBECK	BBHA9120D	D803	01/09/2025	01/08/2026
Horn Antenna	SCHWARZBECK	BBHA9170	184	12/20/2024	12/19/2025
Network Analyzer	Anritsu	MS4644A	1216312	12/25/2024	12/24/2025
Pre-Amplifier	EMCI	EMC118A45SEE	980933	08/30/2024	08/29/2025
Pre-Amplifier	HP	8447D	2944A09469	08/30/2024	08/29/2025
Radio Communication Analyzer	Anritsu	MT8821C	6261786084	12/31/2024	12/30/2025
Site Cal	SGS	SAC 1	N/A	08/30/2024	08/29/2025
Test Software	Audix	e3	Ver. 9.210616	N.C.R	N.C.R

NOTE: *N.C.R refers to Not Calibrated Required.*

Unless otherwise stated the results shown in this test report refer only to the sample(s) tested and such sample(s) are retained for 90 days only.
除非另有說明，此報告結果僅對測試之樣品負責，同時此樣品僅保留90天。本報告未經本公司書面許可，不可部份複製。
This document is issued by the Company subject to its General Conditions of Service printed overleaf, available on request or accessible at http://www.sgs.com.tw/Terms-and-Conditions and for electronic format documents, subject to Terms and Conditions for Electronic Documents at http://www.sgs.com.tw/Terms-and-Conditions. Attention is drawn to the limitation of liability, indemnification and jurisdiction issues defined therein. Any holder of this document is advised that information contained hereon reflects the Company's findings at the time of its intervention only and within the limits of Client's instructions, if any. The Company's sole responsibility is to its Client and this document does not exonerate parties to a transaction from exercising all their rights and obligations under the transaction documents. This document cannot be reproduced except in full, without prior written approval of the Company. Any unauthorized alteration, forgery or falsification of the content or appearance of this document is unlawful and offenders may be prosecuted to the fullest extent of the law.

7 STANDARD APPLICABLE

7.1 Maximum Output Power

A base station simulator was used to establish communication with the EUT. Its parameters were set to transmit the maximum power on the EUT. The measured power in the radio frequency on the transmitter output terminals.

7.1.1 ERP/EIRP LIMIT

According to FCC §2.1046

FCC §27.1507(a)(4)

(a) Maximum ERP. The power limits specified in this section are applicable to operations in areas more than 110 km (68.4 miles) from the U.S./Mexico border and 140 km (87 miles) from the U.S./Canada border.

(4) Portable stations. Portable stations must not exceed 3 watts ERP.

7.2 Occupied Bandwidth Measurement

The occupied bandwidth is the frequency bandwidth such that, below its lower and above its upper frequency limits, the mean powers radiated are each equal to 0.5 percent of the total mean power.

7.3 Out Of Band Emission At Antenna Terminals

FCC §27.1509

Out of band emissions.The power of any emission outside of the authorized operating frequency ranges must be attenuated below the transmitting power (P) by a factor of at least 43 + 10 log(P) dB.

The power of any emission outside a licensee's frequency band(s) of operation shall be attenuated below the transmitter power (P) in watts by at least the following amounts:

(a) For 900 MHz broadband operations in 897.5-900.5 MHz band by at least 43 + 10 log (P) dB.

(b) For 900 MHz broadband operations in the 936.5-939.5 MHz band, by at least 50 + 10 log (P) dB.

(c) Compliance with the provisions of paragraphs (a) and (b) of this section is based on the use of measurement instrumentation employing a resolution bandwidth of 100 kHz or greater. However, in the 100 kHz bands immediately outside and adjacent to the licensee's band, a resolution bandwidth of at least 1 percent of the emission bandwidth of the fundamental emission of the transmitter may be employed. The emission bandwidth is defined as the width of the signal between two points, one below the carrier center frequency and one above the carrier center frequency, outside of which all emissions are attenuated at least 26 dB below the transmitter power.

(d) The measurements of emission power can be expressed in peak or average values, provided they are expressed in the same parameters as the transmitter power.

(e) When an emission outside of the authorized bandwidth causes harmful interference, the Commission may, at its discretion, require greater attenuation than specified in this section.

Unless otherwise stated the results shown in this test report refer only to the sample(s) tested and such sample(s) are retained for 90 days only.
除非另有說明，此報告結果僅對測試之樣品負責，同時此樣品僅保留90天。本報告未經本公司書面許可，不可部份複製。
This document is issued by the Company subject to its General Conditions of Service printed overleaf, available on request or accessible at http://www.sgs.com.tw/Terms-and-Conditions and for electronic format documents, subject to Terms and Conditions for Electronic Documents at http://www.sgs.com.tw/Terms-and-Conditions. Attention is drawn to the limitation of liability, indemnification and jurisdiction issues defined therein. Any holder of this document is advised that information contained hereon reflects the Company's findings at the time of its intervention only and within the limits of Client's instructions, if any. The Company's sole responsibility is to its Client and this document does not exonerate parties to a transaction from exercising all their rights and obligations under the transaction documents. This document cannot be reproduced except in full, without prior written approval of the Company. Any unauthorized alteration, forgery or falsification of the content or appearance of this document is unlawful and offenders may be prosecuted to the fullest extent of the law.

7.4 Field Strength Of Spurious Radiation Measurement

According to FCC §2.1053,

FCC §27.1508

The predicted or measured median field strength must not exceed 40 dBμV/m at any given point along the geographic license boundary, unless the affected licensee agrees to a different field strength. This value applies to both the initially offered service areas and to partitioned service areas.

7.5 Frequency Stability Measurement

The frequency stability shall be sufficient to ensure that the fundamental emission stays within the authorized frequency block.

7.6 Peak to Average Ratio

FCC §27.1507(d)

(d) *PAR limit.* The peak-to-average ratio (PAR) of the transmission must not exceed 13 dB.

Unless otherwise stated the results shown in this test report refer only to the sample(s) tested and such sample(s) are retained for 90 days only.
除非另有說明，此報告結果僅對測試之樣品負責，同時此樣品僅保留90天。本報告未經本公司書面許可，不可部份複製。
This document is issued by the Company subject to its General Conditions of Service printed overleaf, available on request or accessible at http://www.sgs.com.tw/Terms-and-Conditions and for electronic format documents, subject to Terms and Conditions for Electronic Documents at http://www.sgs.com.tw/Terms-and-Conditions. Attention is drawn to the limitation of liability, indemnification and jurisdiction issues defined therein. Any holder of this document is advised that information contained hereon reflects the Company's findings at the time of its intervention only and within the limits of Client's instructions, if any. The Company's sole responsibility is to its Client and this document does not exonerate parties to a transaction from exercising all their rights and obligations under the transaction documents. This document cannot be reproduced except in full, without prior written approval of the Company. Any unauthorized alteration, forgery or falsification of the content or appearance of this document is unlawful and offenders may be prosecuted to the fullest extent of the law.

8 TEST SETUP

8.1 Maximum Output Power

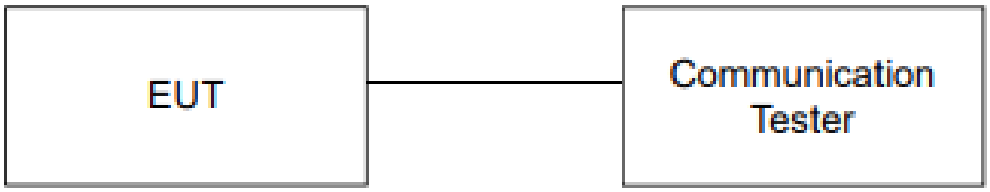

Note: *Measurement setup for testing on Antenna connector*

8.2 Occupied Bandwidth Measurement

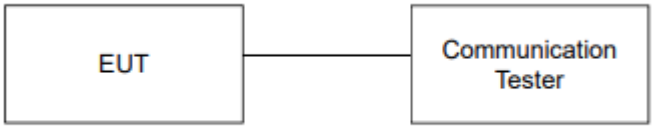

Note: *Measurement setup for testing on Antenna connector*

8.3 Out of Band Emission At Antenna Terminals

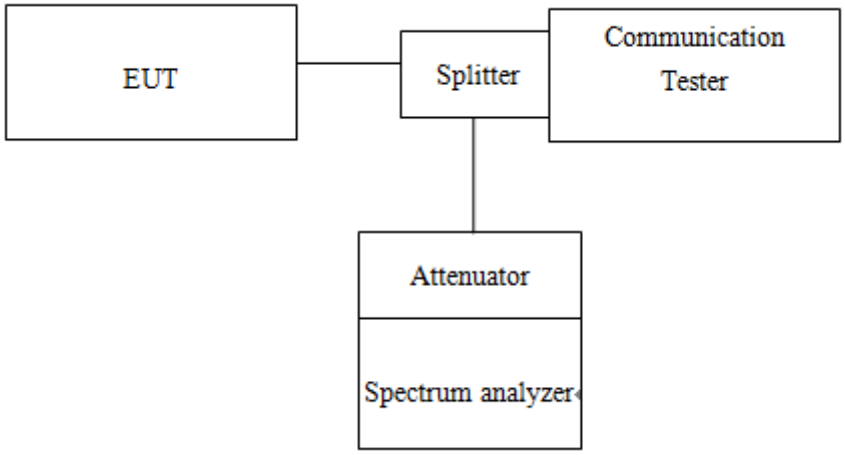

Unless otherwise stated the results shown in this test report refer only to the sample(s) tested and such sample(s) are retained for 90 days only.
除非另有說明，此報告結果僅對測試之樣品負責，同時此樣品僅保留90天。本報告未經本公司書面許可，不可部份複製。
This document is issued by the Company subject to its General Conditions of Service printed overleaf, available on request or accessible at http://www.sgs.com.tw/Terms-and-Conditions and for electronic format documents, subject to Terms and Conditions for Electronic Documents at http://www.sgs.com.tw/Terms-and-Conditions. Attention is drawn to the limitation of liability, indemnification and jurisdiction issues defined therein. Any holder of this document is advised that information contained hereon reflects the Company's findings at the time of its intervention only and within the limits of Client's instructions, if any. The Company's sole responsibility is to its Client and this document does not exonerate parties to a transaction from exercising all their rights and obligations under the transaction documents. This document cannot be reproduced except in full, without prior written approval of the Company. Any unauthorized alteration, forgery or falsification of the content or appearance of this document is unlawful and offenders may be prosecuted to the fullest extent of the law.

8.4 Field Strength of Spurious Radiation Measurement

Radiated Emission Test Set-Up, Frequency From 30MHz to 1000MHz.

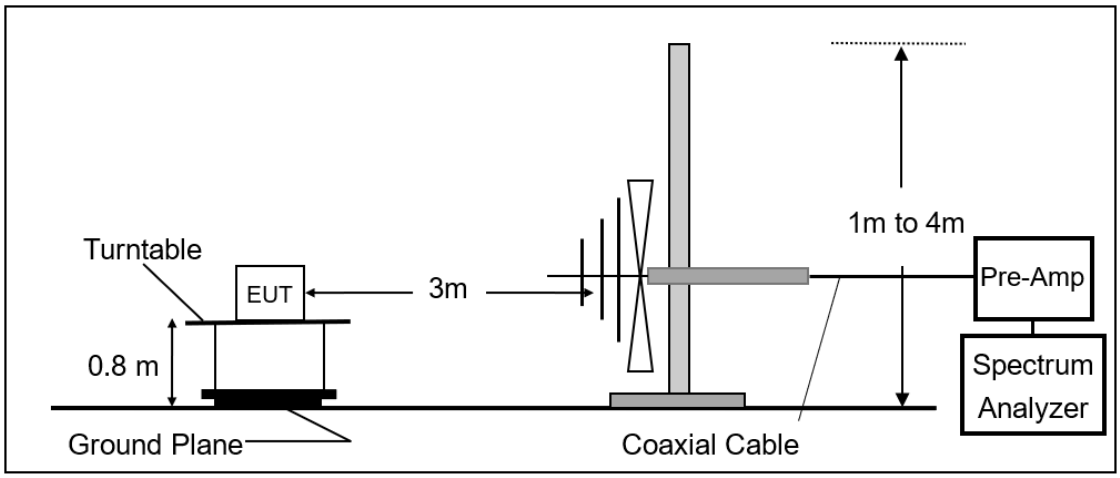

Radiated Emission Test Set-Up, Frequency Above 1GHz.

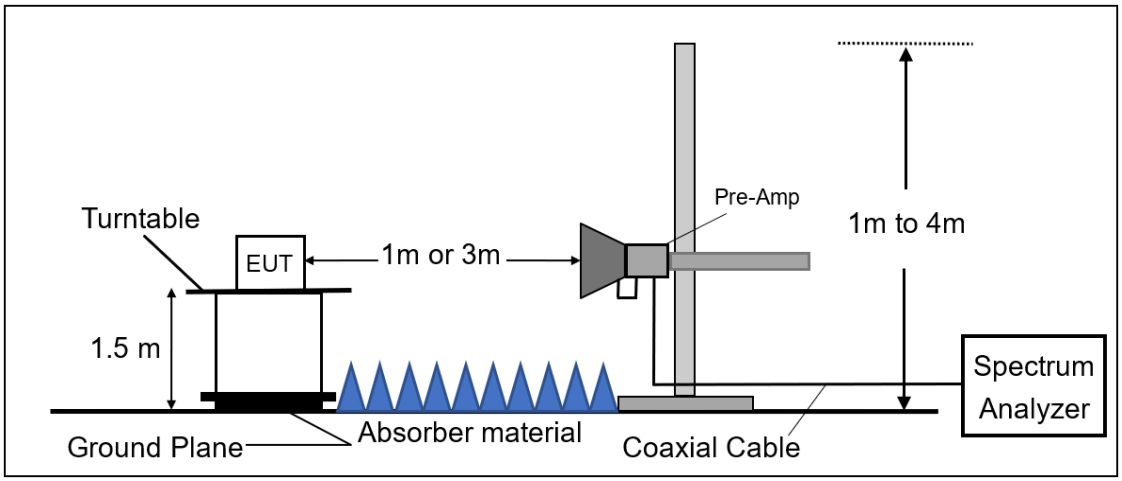

Unless otherwise stated the results shown in this test report refer only to the sample(s) tested and such sample(s) are retained for 90 days only.
除非另有說明，此報告結果僅對測試之樣品負責，同時此樣品僅保留90天。本報告未經本公司書面許可，不可部份複製。
This document is issued by the Company subject to its General Conditions of Service printed overleaf, available on request or accessible at http://www.sgs.com.tw/Terms-and-Conditions and for electronic format documents, subject to Terms and Conditions for Electronic Documents at http://www.sgs.com.tw/Terms-and-Conditions. Attention is drawn to the limitation of liability, indemnification and jurisdiction issues defined therein. Any holder of this document is advised that information contained hereon reflects the Company's findings at the time of its intervention only and within the limits of Client's instructions, if any. The Company's sole responsibility is to its Client and this document does not exonerate parties to a transaction from exercising all their rights and obligations under the transaction documents. This document cannot be reproduced except in full, without prior written approval of the Company. Any unauthorized alteration, forgery or falsification of the content or appearance of this document is unlawful and offenders may be prosecuted to the fullest extent of the law.

8.5 Frequency Stability Measurement

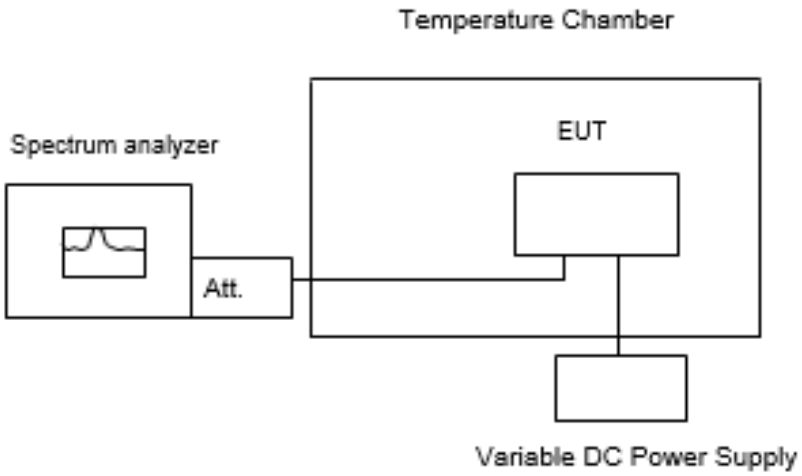

Note: *Measurement setup for testing on Antenna connector*

Unless otherwise stated the results shown in this test report refer only to the sample(s) tested and such sample(s) are retained for 90 days only.
除非另有說明，此報告結果僅對測試之樣品負責，同時此樣品僅保留90天。本報告未經本公司書面許可，不可部份複製。
This document is issued by the Company subject to its General Conditions of Service printed overleaf, available on request or accessible at http://www.sgs.com.tw/Terms-and-Conditions and for electronic format documents, subject to Terms and Conditions for Electronic Documents at http://www.sgs.com.tw/Terms-and-Conditions. Attention is drawn to the limitation of liability, indemnification and jurisdiction issues defined therein. Any holder of this document is advised that information contained hereon reflects the Company's findings at the time of its intervention only and within the limits of Client's instructions, if any. The Company's sole responsibility is to its Client and this document does not exonerate parties to a transaction from exercising all their rights and obligations under the transaction documents. This document cannot be reproduced except in full, without prior written approval of the Company. Any unauthorized alteration, forgery or falsification of the content or appearance of this document is unlawful and offenders may be prosecuted to the fullest extent of the law.

9 TEST PROCEDURE

9.1 Maximum Output Power

9.1.1 Output Power Measurement Applicable Guideance

The transmitter output was connected to a communication tester. Transmitter output was read off the communication tester in dBm. The power output at the transmitter antenna port was determined by the communication tester reading.
KDB 971168 D01 Power Meas License Digital System as the supplemental test methodology to adjust the proper setting obtaining the measurement results.
All LTE bands conducted average power is obtained from the simulator telecommunication test set.

9.1.2 Determining ERP and/or EIRP from conducted RF output power measurements

According to KDB 412172 D01 Power Approach,

$EIRP = P_T + G_T - L_C$,

$ERP = EIRP - 2.15$,

Where:

ERP or EIRP = effective radiated power or equivalent isotropically radiated power (expressed in the same units as PT, typically dBW, dBm, or power spectral density (PSD)2), relative to either a dipole antenna (ERP) or an isotropic antenna (EIRP);

P_T = transmitter output power, expressed in dBW, dBm, or PSD;

G_T = gain of the transmitting antenna, in dBd (ERP) or dBi (EIRP);

L_C = signal attenuation in the connecting cable between the transmitter and antenna, in dB.

9.2 Occupied Bandwidth Measurement

99% &26dB Bandwidth with detector peak

The EUT's output RF connector was connected with a short cable to the spectrum analyzer, RBW was set to about 1% of emission BW, VBW= 3 times RBW, -26dBc display line was placed on the screen (or 26dB bandwidth), the occupied bandwidth is the delta frequency between the two points where the display line intersects the signal trace. Then set RBW to 99% bandwidth, RBW= 1% ~ 5%, VBW ≥ 3 * RBW, with span > 2 * Signal BW, set % Power = 99%.

Unless otherwise stated the results shown in this test report refer only to the sample(s) tested and such sample(s) are retained for 90 days only.
除非另有說明，此報告結果僅對測試之樣品負責，同時此樣品僅保留90天。本報告未經本公司書面許可，不可部份複製。
This document is issued by the Company subject to its General Conditions of Service printed overleaf, available on request or accessible at http://www.sgs.com.tw/Terms-and-Conditions and for electronic format documents, subject to Terms and Conditions for Electronic Documents at http://www.sgs.com.tw/Terms-and-Conditions. Attention is drawn to the limitation of liability, indemnification and jurisdiction issues defined therein. Any holder of this document is advised that information contained hereon reflects the Company's findings at the time of its intervention only and within the limits of Client's instructions, if any. The Company's sole responsibility is to its Client and this document does not exonerate parties to a transaction from exercising all their rights and obligations under the transaction documents. This document cannot be reproduced except in full, without prior written approval of the Company. Any unauthorized alteration, forgery or falsification of the content or appearance of this document is unlawful and offenders may be prosecuted to the fullest extent of the law.

9.3 Out of Band Emission at Antenna Terminals

9.3.1 Conducted Emission

The RF output of the transceiver was connected to a spectrum analyzer through appropriate attenuation The resolution bandwidth of the spectrum analyzer was set at 1MHz, sufficient scans were taken to show the out of band Emissions if any up to 10th harmonic.

1. To connect Antenna Port of EUT to Spectrum.
2. Set RBW = 1MHz & VBW = 1MHz on Spectrum.
3. Allow trace to fully stabilize
4. Repeat above procedures until all default test channel measured were complete.

9.3.2 Band Edge

1. To connect Antenna Port of EUT to Spectrum.
2. The band edge of low and high channels for the highest RF powers was measured. Setting RBW ≥ 1% EBW.
3. Allow trace to fully stabilize
4. Repeat above procedures until all default test channel measured were complete.

9.4 Field Strength of Spurious Radiation Measurement

The EUT was placed on a non-conductive; the measurement antenna was placed at a distance of 3 meters from the EUT. During the tests, the antenna height and the EUT azimuth were varied in order to identify the maximum level of emissions from the EUT. This maximization process was repeated with the EUT positioned in each of its three orthogonal orientations.

The frequency range up to tenth harmonic was investigated for each of three fundamental frequencies (low, middle and high channels). Once spurious emission was identified, the power of the emission was determined using the substitution method.

The spurious emissions attenuation was calculated as the difference between radiated power at the fundamental frequency and the spurious emissions frequency.

ERP (dBm) = SG Level(dBm) + Antenna Gain(dBd) + Cable Loss(dB)

EIRP (dBm) = SG Level(dBm) + Antenna Gain(dBi) + Cable Loss(dB)

9.5 Frequency Stability Measurement

The equipment under test was connected to an external AC or DC power supply and input rated voltage. RF output was connected to a frequency counter or spectrum analyzer via feed through attenuators. The EUT was placed inside the temperature chamber. Set the spectrum analyzer RBW low enough to obtain the desired frequency resolution and measure EUT 20°C operating frequency as reference frequency. Turn EUT off and set the chamber temperature to –30°C. After the temperature stabilized for approximately 30 minutes recorded the frequency. Repeat step measure with 10°C increased per stage until the highest temperature of +50°C reached.

Unless otherwise stated the results shown in this test report refer only to the sample(s) tested and such sample(s) are retained for 90 days only.
除非另有說明，此報告結果僅對測試之樣品負責，同時此樣品僅保留90天。本報告未經本公司書面許可，不可部份複製。
This document is issued by the Company subject to its General Conditions of Service printed overleaf, available on request or accessible at http://www.sgs.com.tw/Terms-and-Conditions and for electronic format documents, subject to Terms and Conditions for Electronic Documents at http://www.sgs.com.tw/Terms-and-Conditions. Attention is drawn to the limitation of liability, indemnification and jurisdiction issues defined therein. Any holder of this document is advised that information contained hereon reflects the Company's findings at the time of its intervention only and within the limits of Client's instructions, if any. The Company's sole responsibility is to its Client and this document does not exonerate parties to a transaction from exercising all their rights and obligations under the transaction documents. This document cannot be reproduced except in full, without prior written approval of the Company. Any unauthorized alteration, forgery or falsification of the content or appearance of this document is unlawful and offenders may be prosecuted to the fullest extent of the law.

Set chamber temperature to 20℃. Use a variable AC power supply / DC power source to power the EUT and set the voltage to rated voltage. Set the spectrum analyzer RBW low enough to obtain the desired frequency resolution and recorded the frequency.
Reduce the input voltage to specify extreme voltage variation (+/- 15%) and endpoint as declared by the manufacturer, record the maximum frequency change.

10 MEASUREMENT RESULTS

Please refer to the Annex A-Measurement Results.

~ End of Report ~

Unless otherwise stated the results shown in this test report refer only to the sample(s) tested and such sample(s) are retained for 90 days only.
除非另有說明，此報告結果僅對測試之樣品負責，同時此樣品僅保留90天。本報告未經本公司書面許可，不可部份複製。
This document is issued by the Company subject to its General Conditions of Service printed overleaf, available on request or accessible at http://www.sgs.com.tw/Terms-and-Conditions and for electronic format documents, subject to Terms and Conditions for Electronic Documents at http://www.sgs.com.tw/Terms-and-Conditions. Attention is drawn to the limitation of liability, indemnification and jurisdiction issues defined therein. Any holder of this document is advised that information contained hereon reflects the Company's findings at the time of its intervention only and within the limits of Client's instructions, if any. The Company's sole responsibility is to its Client and this document does not exonerate parties to a transaction from exercising all their rights and obligations under the transaction documents. This document cannot be reproduced except in full, without prior written approval of the Company. Any unauthorized alteration, forgery or falsification of the content or appearance of this document is unlawful and offenders may be prosecuted to the fullest extent of the law.
SGS Taiwan Ltd. 台灣檢驗科技股份有限公司
No.134,Wu Kung Road, New Taipei Industrial Park, Wuku District, New Taipei City, Taiwan/新北市五股區新北產業園區五工路 134 號
t (886-2) 2299-3279 f (886-2) 2298-0488 www.sgs.com.tw
Member of SGS Group