ME910G1
HW Design Guide

1VV0301593 Rev. 6 – 2020-07-28

TELIT
TECHNICAL
DOCUMENTATION

[04.2016]

Mod. 0805 2016-08 Rev.5

SPECIFICATIONS ARE SUBJECT TO CHANGE WITHOUT NOTICE

NOTICE

While reasonable efforts have been made to assure the accuracy of this document, Telit assumes no liability resulting from any inaccuracies or omissions in this document, or from use of the information obtained herein. The information in this document has been carefully checked and is believed to be reliable. However, no responsibility is assumed for inaccuracies or omissions. Telit reserves the right to make changes to any products described herein and reserves the right to revise this document and to make changes from time to time in content hereof with no obligation to notify any person of revisions or changes. Telit does not assume any liability arising out of the application or use of any product, software, or circuit described herein; neither does it convey license under its patent rights or the rights of others.

It is possible that this publication may contain references to, or information about Telit products (machines and programs), programming, or services that are not announced in your country. Such references or information must not be construed to mean that Telit intends to announce such Telit products, programming, or services in your country.

COPYRIGHTS

This instruction manual and the Telit products described in this instruction manual may be, include or describe copyrighted Telit material, such as computer programs stored in semiconductor memories or other media. Laws in the Italy and other countries preserve for Telit and its licensors certain exclusive rights for copyrighted material, including the exclusive right to copy, reproduce in any form, distribute and make derivative works of the copyrighted material. Accordingly, any copyrighted material of Telit and its licensors contained herein or in the Telit products described in this instruction manual may not be copied, reproduced, distributed, merged or modified in any manner without the express written permission of Telit. Furthermore, the purchase of Telit products shall not be deemed to grant either directly or by implication, estoppel, or otherwise, any license under the copyrights, patents or patent applications of Telit, as arises by operation of law in the sale of a product.

COMPUTER SOFTWARE COPYRIGHTS

The Telit and 3rd Party supplied Software (SW) products described in this instruction manual may include copyrighted Telit and other 3rd Party supplied computer programs stored in semiconductor memories or other media. Laws in the Italy and other countries preserve for Telit and other 3rd Party supplied SW certain exclusive rights for copyrighted computer programs, including the exclusive right to copy or reproduce in any form the copyrighted computer program. Accordingly, any copyrighted Telit or other 3rd Party supplied SW computer programs contained in the Telit products described in this instruction manual may not be copied (reverse engineered) or reproduced in any manner without the express written permission of Telit or the 3rd Party SW supplier. Furthermore, the purchase of Telit products shall not be deemed to grant either directly or by implication, estoppel, or otherwise, any license under the copyrights, patents or patent applications of Telit or other 3rd Party supplied SW, except for the normal non-exclusive, royalty free license to use that arises by operation of law in the sale of a product.

USAGE AND DISCLOSURE RESTRICTIONS

I. License Agreements

The software described in this document is the property of Telit and its licensors. It is furnished by express license agreement only and may be used only in accordance with the terms of such an agreement.

II. Copyrighted Materials

Software and documentation are copyrighted materials. Making unauthorized copies is prohibited by law. No part of the software or documentation may be reproduced, transmitted, transcribed, stored in a retrieval system, or translated into any language or computer language, in any form or by any means, without prior written permission of Telit

III. High Risk Materials

Components, units, or third-party products used in the product described herein are NOT fault-tolerant and are NOT designed, manufactured, or intended for use as on-line control equipment in the following hazardous environments requiring fail-safe controls: the operation of Nuclear Facilities, Aircraft Navigation or Aircraft Communication Systems, Air Traffic Control, Life Support, or Weapons Systems (High Risk Activities"). Telit and its supplier(s) specifically disclaim any expressed or implied warranty of fitness for such High Risk Activities.

IV. Trademarks

TELIT and the Stylized T Logo are registered in Trademark Office. All other product or service names are the property of their respective owners.

V. Third Party Rights

The software may include Third Party Right software. In this case you agree to comply with all terms and conditions imposed on you in respect of such separate software. In addition to Third Party Terms, the disclaimer of warranty and limitation of liability provisions in this License shall apply to the Third Party Right software.

TELIT HEREBY DISCLAIMS ANY AND ALL WARRANTIES EXPRESS OR IMPLIED FROM ANY THIRD PARTIES REGARDING ANY SEPARATE FILES, ANY THIRD PARTY MATERIALS INCLUDED IN THE SOFTWARE, ANY THIRD PARTY MATERIALS FROM WHICH THE SOFTWARE IS DERIVED (COLLECTIVELY “OTHER CODE”), AND THE USE OF ANY OR ALL THE OTHER CODE IN CONNECTION WITH THE SOFTWARE, INCLUDING (WITHOUT LIMITATION) ANY WARRANTIES OF SATISFACTORY QUALITY OR FITNESS FOR A PARTICULAR PURPOSE.

NO THIRD PARTY LICENSORS OF OTHER CODE SHALL HAVE ANY LIABILITY FOR ANY DIRECT, INDIRECT, INCIDENTAL, SPECIAL, EXEMPLARY, OR CONSEQUENTIAL DAMAGES (INCLUDING WITHOUT LIMITATION LOST PROFITS), HOWEVER CAUSED AND WHETHER MADE UNDER CONTRACT, TORT OR OTHER LEGAL THEORY, ARISING IN ANY WAY OUT OF THE USE OR DISTRIBUTION OF THE OTHER CODE OR THE EXERCISE OF ANY RIGHTS GRANTED UNDER EITHER OR BOTH THIS LICENSE AND THE LEGAL TERMS APPLICABLE TO ANY SEPARATE FILES, EVEN IF ADVISED OF THE POSSIBILITY OF SUCH DAMAGES.

APPLICABILITY TABLE

PRODUCTS

- ME910G1-W1
- ME910G1-WW
- ME910G1-WWV

Contents

NOTICE 2

COPYRIGHTS 2

COMPUTER SOFTWARE COPYRIGHTS 2

USAGE AND DISCLOSURE RESTRICTIONS 3

I. License Agreements 3

II. Copyrighted Materials 3

III. High Risk Materials 3

IV. Trademarks 3

V. Third Party Rights 3

APPLICABILITY TABLE 4

CONTENTS 5

1. INTRODUCTION 9

1.1. Scope 9

1.2. Audience 9

1.3. Contact Information, Support 9

1.4. Text Conventions 10

1.5. Related Documents 10

2. GENERAL PRODUCT DESCRIPTION 11

2.1. Overview 11

2.2. Product Variants and Frequency Bands 11

2.3. Target Market 12

2.4. Main features 12

2.5. TX Output Power 13

2.5.1. ME910G1-W1 13

2.5.2. ME910G1-WW and ME910G1-WWV 13

2.6. RX Sensitivity 14

2.6.1. ME910G1-W1 14

2.6.2. ME910G1-WW and ME910G1-WWV 16

2.7. Mechanical Specifications 19

2.7.1. Dimensions 19

2.7.2. Weight 19

2.8. Temperature Range 19

3. PINS ALLOCATION 20
3.1. Pin-out 20
3.2. LGA Pads Layout 30
4. POWER SUPPLY 31
4.1. Power Supply Requirements 31
4.2. Power Consumption 33
4.2.1. Idle mode 33
4.2.2. ME910G1-W1 Connected Mode 35
4.2.3. ME910G1-WW and ME910G1-WWV Connected Mode 35
4.3. General Design Rules 37
4.3.1. Electrical Design Guidelines of the power supply 37
4.3.1.1. +5V Source Power Supply Design Guidelines 37
4.3.1.2. +12V Source Power Supply Design Guidelines 38
4.3.1.3. Battery Source Power Supply Design Guidelines 39
4.3.2. Thermal Design Guidelines 40
4.3.3. Power Supply PCB layout Guidelines 40
4.4. VAUX Power Output 43
4.5. RTC Supply 43
5. DIGITAL SECTION 44
5.1. Logic Levels 44
5.2. Power On 45
5.3. Power Off 49
5.4. Wake from deep sleep mode 51
5.5. Unconditional Shutdown 51
5.6. Fast power down 54
5.6.1. Fast Shut Down by Hardware 55
5.6.2. Fast Shut Down by Software 55
5.7. Communication ports 56
5.7.1. USB 2.0 HS 56
5.7.2. SPI 57
5.7.2.1. SPI Connections 58
5.7.3. Serial Ports 58
5.7.3.1. Modem serial port 1 (USIF0) 58
5.7.3.2. Modem serial port 2 (USIF1) 60
5.7.3.3. RS232 level translation 61
5.8. General purpose I/O 63
5.8.1. Using a GPIO as INPUT 64

5.8.2. Using a GPIO as OUTPUT 64
5.8.3. Indication of network service availability 64
5.9. External SIM Holder 65
5.10. ADC Converter 66

6. RF SECTION 67
6.1. Bands Variants 67
6.2. TX Output power 67
6.3. RX Sensitivity 67
6.4. Antenna requirements 67
6.4.1. PCB Design guidelines 68
6.4.2. PCB Guidelines in case of FCC Certification 69
6.4.2.1. Transmission line design 70
6.4.2.2. Transmission Line Measurements 71
6.4.2.3. Antenna Installation Guidelines 73

7. AUDIO SECTION 74
7.1. Electrical Characteristics 74
7.2. Codec examples 74

8. GNSS SECTION 75
8.1. GNSS Signals Pin-out 75
8.2. RF Front End Design 75
8.2.1. Guidelines of PCB line for GNSS Antenna 75
8.2.2. Hardware-based solution for GNSS and LTE coexistence 76
8.3. GNSS Antenna Requirements 76
8.3.1. GNSS Antenna specification 76
8.3.2. GNSS Antenna – Installation Guidelines 77
8.3.3. Powering the External LNA (active antenna) 77
8.4. GNSS Characteristics 78

9. MECHANICAL DESIGN 79
9.1. Drawing 79

10. APPLICATION PCB DESIGN 80
10.1. Recommended footprint for the application 80
10.2. PCB pad design 82
10.3. Recommendations for PCB pad dimensions 83
10.4. Thermal performance 84
10.5. Stencil 84
10.6. Solder paste 85

10.7. Solder Reflow 85
10.8. Inspection 87

11. PACKAGING 88
11.1. Tray 88
11.2. Reel 90
11.3. Carrier Tape detail 90
11.4. Reel detail 91
11.5. Packaging detail 92
11.6. Moisture sensitivity 92

12. CONFORMITY ASSESSMENT ISSUES 93
12.1. Approvals 93
12.2. RED approval 93
12.2.1. RED Declaration of Conformity 93
12.2.2. Antennas 93
12.3. FCC and ISED approval / *FCC et ISDE approbation* 95
12.3.1. FCC certificates 95
12.3.2. ISED Certificate / *ISDE certificates* 95
12.3.3. Applicable FCC and ISED rules / *Liste des règles FCC et ISDE applicables* 95
12.3.4. FCC and ISED Regulatory notices / *Avis réglementaires de FCC et ISDE* 95
12.3.5. Antennas / *Antennes* 96
12.3.6. FCC label and compliance information 99
12.3.7. ISED label and compliance information/ *Étiquette et informations de conformité ISDE* 99
12.3.8. Test modes and additional testing requirements / *Sur les modes de test et les exigences de test supplémentaires* 100
12.3.9. FCC Additional testing, Part 15 Subpart B disclaimer 100
12.4. ANATEL Regulatory Notices 101

13. SAFETY RECOMMENDATIONS 102
13.1. READ CAREFULLY 102

14. ACRONYMS 103

15. DOCUMENT HISTORY 105

1. INTRODUCTION

1.1. Scope

Scope of this document is to give a description of some hardware solutions useful for developing a product with the Telit ME910G1 module.

1.2. Audience

This document is intended for Telit customers, who are integrators, about to implement their applications using our ME910G1 modules.

1.3. Contact Information, Support

For general contact, technical support services, technical questions and report documentation errors contact Telit Technical Support at:

- TS-EMEA@telit.com
- TS-AMERICAS@telit.com
- TS-APAC@telit.com
- TS-SRD@telit.com

Alternatively, use:

http://www.telit.com/support

For detailed information about where you can buy the Telit modules or for recommendations on accessories and components visit:

http://www.telit.com

Our aim is to make this guide as helpful as possible. Keep us informed of your comments and suggestions for improvements.

Telit appreciates feedback from the users of our information.

1.4. Text Conventions

Danger – This information MUST be followed or catastrophic equipment failure or bodily injury may occur.

Caution or Warning – Alerts the user to important points about integrating the module, if these points are not followed, the module and end user equipment may fail or malfunction.

Tip or Information – Provides advice and suggestions that may be useful when integrating the module.

All dates are in ISO 8601 format, i.e. YYYY-MM-DD.

1.5. Related Documents

80000NT10001A - SIM INTEGRATION DESIGN GUIDES Application Note

80000NT10060A - xE910 Global Form Factor Application Note

80000NT10002A - ANTENNA DETECTION

80000NT10003A - Rework procedure for BGA modules

80000NT10028A - Event Monitor Application Note

2. GENERAL PRODUCT DESCRIPTION

2.1. Overview

The ME910G1 module is a CATM / NBIoT communication product which allows integrators to plan on availability for even the longest lifecycle applications, highly recommended for new designs specified for coverage worldwide.

The product is fully voice capable, the digital audio interfaces make it suitable for applications such as voice enabled alarm panels, mHealth patient monitors and specialty phones such as those for the elderly or sensory-impaired.

The ME910G1 operates with 1.8 V GPIOs, minimizing power consumption and making it even more ideally suited for battery powered and wearable device applications.

2.2. Product Variants and Frequency Bands

Product	2G Band (MHz)	LTE CATM1	NBIoT	Region
ME910G1-W1	-	B1, B2, B3, B4, B5, B8, B12, B13, B18, B19, B20, B25, B26, B27, B28, B66, B85	B1, B2, B3, B4, B5, B8, B12, B13, B18, B19, B20, B25, B26, B28, B66, B71, B85	Worldwide
ME910G1-WW	850, 900, 1800, 1900	B1, B2, B3, B4, B5, B8, B12, B13, B18, B19, B20, B25, B26, B27, B28, B66, B85	B1, B2, B3, B4, B5, B8, B12, B13, B18, B19, B20, B25, B26, B28, B66, B71, B85	Worldwide
ME910G1-WWV	850, 900, 1800, 1900	B1, B2, B3, B4, B5, B8, B12, B13, B18, B19, B20, B25, B26, B27, B28, B66, B85	B1, B2, B3, B4, B5, B8, B12, B13, B18, B19, B20, B25, B26, B28, B66, B71, B85	Worldwide

Refer to “RF Section” for details information about frequencies and bands.

NOTE:

Cellular technologies and frequency bands that are enabled may vary based on firmware version and firmware configuration used.

2.3. Target Market

ME910G1 can be used for telematics applications where tamper-resistance, confidentiality, integrity, and authenticity of end-user information are required, for example:

- Telematics services
- Road pricing
- Pay-as-you-drive insurance
- Stolen vehicles tracking
- Internet connectivity

2.4. Main features

Function	Features
Modem	• CATM and NBIoT technologies • SMS support (text and PDU) • Alarm management • Real Time Clock
Intefaces	• Main UART is typically used for AT command access • Secondary UARTused for Diagnostic monitoring and debugging • 10 GPIOs • Antenna port

2.5. TX Output Power

2.5.1. ME910G1-W1

Band	Mode	Class	RF power (dBm)
B1, B2, B3, B4, B5, B8, B12, B13, B14, B18, B19, B20, B25, B26, B27, B28, B66, B85	(LTE) CAT-M1	5	20
B1, B2, B3, B4, B5, B8, B12, B13, B18, B19, B20, B25, B26, B28, B66, B71, B85	(LTE) CAT-NB2	5	20

2.5.2. ME910G1-WW and ME910G1-WWV

Band	Mode	Class	RF power (dBm)
850/900MHz	GSM/GPRS	4	32.5
	EGPRS	E2	27
1800/1900MHz	GSM/GPRS	1	29.5
	EGPRS	E2	26
B1, B2, B3, B4, B5, B8, B12, B13, B18, B19, B20, B25, B26, B27, B28, B66, B85	(LTE) CAT-M1	3	23
B1, B2, B3, B4, B5, B8, B12, B13, B18, B19, B20, B25, B26, B28, B66, B85	(LTE) CAT-NB2	3	23
B71	(LTE) CAT-NB2	5	20

2.6. RX Sensitivity

2.6.1. ME910G1-W1

Band	REFsens (dBm) Typical	3GPP REFsens (dBm)*
CATM1 / Band1	-107.6	-102.7
CAT M1 / Band2	-108.0	-100.3
CAT M1 / Band3	-107.6	-99.3
CAT M1 / Band4	-107.8	-102.3
CAT M1 / Band5	-107.9	-100.8
CAT M1 / Band8	-107.8	-99.8
CAT M1 / Band12	-107.8	-99.3
CAT M1 / Band13	-108.0	-99.3
CAT M1 / Band18	-108.0	-102.3
CAT M1 / Band19	-108.0	-102.3
CAT M1 / Band20	-107.8	-99.8
CAT M1 / Band25	-108.0	-
CAT M1 / Band26	-108.0	-100.3
CAT M1 / Band27	-108.0	-100.8
CAT M1 / Band28	-107.9	-100.8

CAT M1 / Band66	-107.8	-
CAT M1 / Band85	-107.6	-
CAT NB2 / Band1	-116.8	-108.2
CAT NB2 / Band2	-116.8	-108.2
CAT NB2 / Band3	-116.8	-108.2
CAT NB2 / Band4	-116.7	-
CAT NB2 / Band5	-116.7	-108.2
CAT NB2 / Band8	-116.4	-108.2
CAT NB2 / Band12	-116.8	-108.2
CAT NB2 / Band13	-116.8	-108.2
CAT NB2 / Band18	-116.8	-108.2
CAT NB2 / Band19	-116.8	-108.2
CAT NB2 / Band20	-116.6	-108.2
CAT NB2 / Band25	-116.8	-
CAT NB2 / Band26	-116.8	-108.2
CAT NB2 / Band28	-116.9	-108.2
CAT NB2 / Band66	-116.6	-108.2
CAT NB2 / Band71	-115.4	-

CAT NB2 / Band85	-116.8	-

* 3GPP TS 36.521-1 Release 15

2.6.2. ME910G1-WW and ME910G1-WWV

Band	REFsens (dBm) Typical	3GPP REFsens (dBm)*
CATM1 / Band1	-106,3	-102.7
CAT M1 / Band2	-107,3	-100.3
CAT M1 / Band3	-106,6	-99.3
CAT M1 / Band4	-106,7	-102.3
CAT M1 / Band5	-107,1	-100.8
CAT M1 / Band8	-107,3	-99.8
CAT M1 / Band12	-106,5	-99.3
CAT M1 / Band13	-107,9	-99.3
CAT M1 / Band18	-107,6	-102.3
CAT M1 / Band19	-106,8	-102.3
CAT M1 / Band20	-107,4	-99.8
CAT M1 / Band25	-107,0	-
CAT M1 / Band26	-107,0	-100.3
CAT M1 / Band27	-107,4	-100.8

CAT M1 / Band28	-107,8	-100.8
CAT M1 / Band66	-106,7	-
CAT M1 / Band85	-105,3	-
CAT NB2 / Band1	-115,4	-108.2
CAT NB2 / Band2	-116,2	-108.2
CAT NB2 / Band3	-116,4	-108.2
CAT NB2 / Band4	-115,6	-
CAT NB2 / Band5	-116,5	-108.2
CAT NB2 / Band8	-115,9	-108.2
CAT NB2 / Band12	-116,6	-108.2
CAT NB2 / Band13	-116,8	-108.2
CAT NB2 / Band18	-116,6	-108.2
CAT NB2 / Band19	-116,4	-108.2
CAT NB2 / Band20	-116,0	-108.2
CAT NB2 / Band25	-116,2	-
CAT NB2 / Band26	-116,1	-108.2
CAT NB2 / Band28	-116,8	-108.2
CAT NB2 / Band66	-115,6	-108.2

CAT NB2 / Band71	-113,7	-
CAT NB2 / Band85	-116,0	-

* 3GPP TS 36.521-1 Release 15

2.7. Mechanical Specifications

2.7.1. Dimensions

The overall dimensions of ME910G1-W1, ME910G1-WW and ME910G1-WWV are:

- Length: 28.2 mm
- Width: 28.2 mm
- Thickness: 2.4 mm

2.7.2. Weight

The nominal weight of the ME910G1-W1 is 3.5 grams.

The nominal weight of the ME910G1-WW and ME910G1-WW is 4 grams.

2.8. Temperature Range

		Note
Operating Temperature Range	–20°C to +55°C	The module is fully functional(*) within this 3GPP temperature range and meets 3GPP specifications.
Extended Temperature Range	–40°C to +85°C	The module is fully functional (*) within this temperature range. The RF performance may deviate from 3GPP requirements in this extended range. For example: receiver sensitivity or maximum output power may deviate by a few dB due to limitations of physics like higher thermal noise floor at high temperature.
Storage Temperature Range	–40°C to +85°C	-

(*) Functional: if applicable, the module is able to make and receive voice calls, data calls, send and receive SMS and data traffic.

3. PINS ALLOCATION

3.1. Pin-out

Pin	Signal	I/O	Function	Type	Comment
USB HS 2.0 COMMUNICATION PORT (FW upgrade and Data)					
B15	USB_D+	I/O	USB differential Data (+)		
C15	USB_D-	I/O	USB differential Data (-)		
A13	VUSB	I	Enable pin for the internal USB transceiver.	5 / 3V	Internal PD (100K)
Asynchronous Serial Port (USIF0) (FW upgrade and Data with Flow Control)					
N15	C103/TXD	I	Serial data input from DTE	CMOS 1.8V	internal PU (100K)
M15	C104/RXD	O	Serial data output to DTE	CMOS 1.8V	
M14	C108/DTR	I	Input for (DTR) from DTE	CMOS 1.8V	internal PU (100K)
L14	C105/RTS	I	Input for Request to send signal (RTS) from DTE	CMOS 1.8V	internal PU (100K)
P15	C106/CTS	O	Output for Clear to Send signal (CTS) to DTE	CMOS 1.8V	
N14	C109/DCD	O	Output for (DCD) to DTE	CMOS 1.8V	
P14	C107/DSR	O	Output for (DSR) to DTE	CMOS 1.8V	
R14	C125/RING	O	Output for Ring (RI) to DTE	CMOS 1.8V	

SIM Card Interface					
A6	SIMCLK	O	External SIM signal – Clock	1.8V	
A7	SIMRST	O	External SIM signal – Reset	1.8V	
A5	SIMIO	I/O	External SIM signal – Data I/O	1.8V	
A4	SIMIN	I	External SIM signal – Presence (active low)	CMOS 1.8	Internal PU (470K)
A3	SIMVCC	-	External SIM signal – Power supply for the SIM	1.8V	
Digital Voice Interface (DVI)					
B9	DVI_WA0	I/O	Digital Audio Interface (WA0)	1.8V	
B6	DVI_RX	I	Digital Audio Interface (RX)	1.8V	
B7	DVI_TX	I/O	Digital Audio Interface (TX)	1.8V	
B8	DVI_CLK	I/O	Digital Audio Interface (CLK)	1.8V	
SPI					
D15	SPI_MOSI	I/O	SPI MOSI	CMOS 1.8V	
E15	SPI_MISO	I/O	SPI_MISO	CMOS 1.8V	
F15	SPI_CLK	I/O	SPI Clock	CMOS 1.8V	
H14	SPI_CS	I/O	SPI Chip Select	CMOS 1.8V	

DIGITAL IO					
C8	GPIO_01	I/O	GPIO_01 /STAT LED	CMOS 1.8V	STAT LED is alternate function internal PD (100K)
C9	GPIO_02	I/O	GPIO_02	CMOS 1.8V	internal PD (100K)
C10	GPIO_03	I/O	GPIO_03	CMOS 1.8V	internal PD (100K)
C11	GPIO_04	I/O	GPIO_04	CMOS 1.8V	internal PD (100K)
B14	GPIO_05	I/O	GPIO_05	CMOS 1.8V	internal PD (100K)
C12	GPIO_06	I/O	GPIO_06	CMOS 1.8V	internal PD (100K)
C13	GPIO_07	I/O	GPIO_07	CMOS 1.8V	internal PD (100K)
K15	GPIO_08	I/O	GPIO_08	CMOS 1.8V	internal PD (100K)
L15	GPIO_09	I/O	GPIO_09	CMOS 1.8V	internal PD (100K)
G15	GPIO_10	I/O	GPIO_10	CMOS 1.8V	internal PD (100K)
ADC					
B1	ADC_IN	AI	Analog Digital Converter input		
RF SECTION					

K1	ANTENNA	I/O	LTE Antenna (50 ohm)	RF	
GNSS Section					
R9	ANT_GNSS	I	GNSS Antenna (50 ohm)	RF	
R7	GNSS_LNA_EN	O	External GNSS LNA Enable	CMOS 1.8V	
Miscellaneous Functions					
R13	HW_SHUTDOWN*	I	HW Unconditional Shutdown	VBATT	Active low
R12	ON_OFF*/WAKE*	I	Input command for power ON and to wake from deep sleep mode	1.8V	Active low
R11	VAUX/PWRMON	O	Supply Output for external accessories / Power ON Monitor	1.8V	
F14	FORCED_USB_BOOT	I	Debug pin, connect to test point	CMOS 1.8V	Active high, internal PD (100K)
Power Supply					
M1	VBATT	-	Main power supply (Baseband)	Power	
M2	VBATT	-	Main power supply (Baseband)	Power	
N1	VBATT_PA	-	Main power supply (Radio PA)	Power	
N2	VBATT_PA	-	Main power supply (Radio PA)	Power	

P1	VBATT_PA	-	Main power supply (Radio PA)	Power
P2	VBATT_PA	-	Main power supply (Radio PA)	Power
E1	GND	-	Ground	Power
G1	GND	-	Ground	Power
H1	GND	-	Ground	Power
J1	GND	-	Ground	Power
L1	GND	-	Ground	Power
A2	GND	-	Ground	Power
E2	GND	-	Ground	Power
F2	GND	-	Ground	Power
G2	GND	-	Ground	Power
H2	GND	-	Ground	Power
J2	GND	-	Ground	Power
K2	GND	-	Ground	Power
L2	GND	-	Ground	Power
R2	GND	-	Ground	Power
M3	GND	-	Ground	Power
N3	GND	-	Ground	Power
P3	GND	-	Ground	Power
R3	GND	-	Ground	Power

D4	GND	-	Ground	Power
M4	GND	-	Ground	Power
N4	GND	-	Ground	Power
P4	GND	-	Ground	Power
R4	GND	-	Ground	Power
N5	GND	-	Ground	Power
P5	GND	-	Ground	Power
R5	GND	-	Ground	Power
N6	GND	-	Ground	Power
P6	GND	-	Ground	Power
R6	GND	-	Ground	Power
P8	GND	-	Ground	Power
R8	GND	-	Ground	Power
P9	GND	-	Ground	Power
P10	GND	-	Ground	Power
R10	GND	-	Ground	Power
M12	GND	-	Ground	Power
B13	GND	-	Ground	Power
P13	GND	-	Ground	Power
E14	GND	-	Ground	Power

RESERVED			
C1	RESERVED	-	RESERVED
D1	RESERVED	-	RESERVED
F1	RESERVED	-	RESERVED
B2	RESERVED	-	RESERVED
C2	RESERVED	-	RESERVED
D2	RESERVED	-	RESERVED
B3	RESERVED	-	RESERVED
C3	RESERVED	-	RESERVED
D3	RESERVED	-	RESERVED
E3	RESERVED	-	RESERVED
F3	RESERVED	-	RESERVED
G3	RESERVED	-	RESERVED
K3	RESERVED	-	RESERVED
L3	RESERVED	-	RESERVED
B4	RESERVED	-	RESERVED
C4	RESERVED	-	RESERVED
B5	RESERVED	-	RESERVED
C5	RESERVED	-	RESERVED
C6	RESERVED	-	RESERVED

C7	RESERVED	-	RESERVED
N7	RESERVED	-	RESERVED
P7	RESERVED	-	RESERVED
N8	RESERVED	-	RESERVED
N9	RESERVED	-	RESERVED
A10	RESERVED	-	RESERVED
N10	RESERVED	-	RESERVED
N11	RESERVED	-	RESERVED
P11	RESERVED	-	RESERVED
B12	RESERVED	-	RESERVED
D12	RESERVED	-	RESERVED
N12	RESERVED	-	RESERVED
P12	RESERVED	-	RESERVED
G14	RESERVED	-	RESERVED
J14	RESERVED	-	RESERVED
K14	RESERVED	-	RESERVED
N13	RESERVED	-	RESERVED
L13	RESERVED	-	RESERVED
J13	RESERVED	-	RESERVED
M13	RESERVED	-	RESERVED

K13	RESERVED	-	RESERVED
H13	RESERVED	-	RESERVED
G13	RESERVED	-	RESERVED
F13	RESERVED	-	RESERVED
B11	RESERVED	-	RESERVED
B10	RESERVED	-	RESERVED
A9	RESERVED	-	RESERVED
A8	RESERVED	-	RESERVED
E13	RESERVED	-	RESERVED
D13	RESERVED	-	RESERVED
D14	RESERVED	-	RESERVED
A14	RESERVED	-	RESERVED
A12	RESERVED	-	RESERVED
A11	RESERVED	-	RESERVED
H15	RESERVED	-	RESERVED
J15	RESERVED	-	RESERVED
C14	RESERVED	-	RESERVED
H3	RESERVED	-	RESERVED
J3	RESERVED	-	RESERVED

WARNING:

Reserved pins must not be connected.

Only D13-E13 pins can be connected together in order to be compatible with HE910 module.

All pull-up (PU) and pull-down (PD) are about 100K

3.2. LGA Pads Layout

TOP VIEW

	A	B	C	D	E	F	G	H	J	K	L	M	N	P	R
1		ADC_IN1	RES	RES	GND	RES	GND	GND	GND	ANT	GND	VBATT	VBATT_PA	VBATT_PA	
2	GND	RES	RES	RES	GND	GND	GND	GND	GND	GND	GND	VBATT	VBATT_PA	VBATT_PA	GND
3	SIMVCC	RES	RES	RES	RES	RES	RES	RES	RES	RES	RES	GND	GND	GND	GND
4	SIMIN	RES	RES	GND								GND	GND	GND	GND
5	SIMIO	RES	RES										GND	GND	GND
6	SIMCLK	DVI_RX	RES										GND	GND	GND
7	SIMRST	DVI_TX	RES										RES	RES	GNSS_LNA_EN
8	RES	DVI_CLK	GPIO_01										RES	GND	GND
9	RES	DVI_WA0	GPIO_02										RES	GND	ANT_GNSS
10	RES	RES	GPIO_03										RES	GND	GND
11	RES	RES	GPIO_04										RES	RES	VAUX/PWRMON
12	RES	RES	GPIO_06	RES								GND	RES	RES	ON_OFF*/WAKE*
13	VUSB	GND	GPIO_07	RES	RES	RES	RES	RES	RES	RES	RES	RES	RES	GND	HW_SHUTDOWN*
14	RES	GPIO_05	RES	RES	GND	FORCE_USB_BOOT	RES	SPI_CS	RES	RES	C105/RTS	C108/DTR	C109/DCD	C107/DSR	C125/RING
15		USB_D+	USB_D-	SPI_MOSI TX_AUX	SPI_MISO RX_AUX	SPI_CLK	GPIO_10	RES	RES	GPIO_08	GPIO_09	C104/RXD	C103/TXD	C106/CTS	

4. POWER SUPPLY

The power supply circuitry and board layout are a very important part in the full product design and they strongly reflect on the product overall performances, hence read carefully the requirements and the guidelines that will follow for a proper design.

4.1. Power Supply Requirements

The external power supply must be connected to VBATT and VBATT_PA pads and must fulfil the following requirements:

Power Supply	Value
Nominal Supply Voltage	3.8V
Operating Voltage Range	3.4 V - 4.2 V
Extended Voltange Range	2.6 V - 4.5 V
$VBATT_{min}$	2.7V

CAUTION:

The range 2.6V - 3.2V can be used only if both USB and 2G are disabled.

NOTE:
The Operating Voltage Range MUST never be exceeded; care must be taken when designing the application's power supply section to avoid having an excessive voltage drop.
If the voltage drop is exceeding the limits it could cause an unintentional power off of ME910G1 module.

Overshoot voltage (regarding MAX Extended Operating Voltage) and drop in voltage (regarding MIN Extended Operating Voltage) MUST never be exceeded;
The "Extended Operating Voltage Range" can be used only with completely assumption and application of the HW User guide suggestions.

NOTE:
For PTCRB approval on the final products the power supply is required to be within the "Normal Operating Voltage Range".

4.2. Power Consumption

4.2.1. Idle mode

Mode	Measure (Typical)			Mode Description
IDLE MODE	**CATM (mA)**	**NBIoT (mA)**	**2G (mA)**	
AT+CFUN=1	9.5	9.2	9.0	Normal mode: full functionality of the module
AT+CFUN=4		7.5		Disabled TX and RX; module is not registered on the network
AT+CFUN=5	1.20	0.95	-	Paging cycle #256 frames (2.56s DRx cycle)
	0.60	0.60	-	81.92s eDRx cycle length (PTW=2.56s, DRX=1.28s)
	0.18[1]	0.18[1]	-	327.68s eDRx cycle length (PTW=2.56s, DRX=1.28s)
	0.10[1]	0.10[1]	-	655.36s eDRx cycle length (PTW=2.56s, DRX=1.28s)
	0.05[1]	0.05[1]	-	1310.72s eDRx cycle length (PTW=2.56s, DRX=1.28s)
	0.03[1]	0.03[1]	-	2621.44s eDRx cycle length (PTW=2.56s, DRX=1.28s)
	-	-	0.90	Paging Multiframe 9
PSM MODE	**Typical (mA)**			
AT+CPSMS=1	3uA			No current source or sink by any connected pin

[1]PSM in between eDRX

Mode		Measure* (Typical)	Mode Description
GPS		**(mA)**	
Active State (GNSS ON, CFUN=4)	Acquisition	69.3	GPS+GLO, DPO off
	Navigation	22	GPS+GLO, DPO on DWELL=280ms
		55.9	GPS+GLO, DPO off
Active State (GNSS ON, CFUN=5 eDRX)	Acquisition	68.5	GPS+GLO, DPO off
	Navigation	15.7	GPS+GLO, DPO on DWELL=280ms
		54	GPS+GLO, DPO off

*reference signal @-130 dbm with static scenario

NOTE:
The reported LTE CAT M1 and LTE CAT NB1 values are an average among all the product variants and bands for each network wireless technology.
The support of specific network wireless technology depends on product variant configuration.

4.2.2. ME910G1-W1 Connected Mode

	Measure (Typical)		Mode Description
CONNECTED MODE	**Average (mA)**	**Peak (mA)**	
CATM	180	400	1 RB, RMC, TBS=5, QPSK, 21dBm, all bands
NBIoT	245	340	3.75KHz, 1 SC, RU 32ms, TBS=0, BPSK, 20dBm, all bands
	65	290	15KHz, 12 SC, RU 1ms, TBS=5, QPSK, 21dBm, all bands

4.2.3. ME910G1-WW and ME910G1-WWV Connected Mode

	Measure (Typical)		Mode Description
CONNECTED MODE	**Average (mA)**	**Peak (mA)**	
CATM	380	1100	1 RB, RMC, TBS=5, QPSK, 23dBm, Band 85, 28, 12
	320	900	1 RB, RMC, TBS=5, QPSK,23dBm, Band 13, 26, 5, 18, 19, 20, 8
	305	800	1 RB, RMC, TBS=5, QPSK, 23dBm, Band 3, 2, 25, 4, 1, 66
NBIoT	240	335	3.75KHz, 1 SC, RU 32ms, TBS=0, BPSK, 20dBm, Band 71
	600	1000	3.75KHz, 1 SC, RU 32ms, TBS=0, BPSK, 23dBm, Band 85, 28, 12
	500	850	3.75KHz, 1 SC, RU 32ms, TBS=0, BPSK, 23dBm, Band 13, 26, 5, 18, 19, 20, 8
	430	750	3.75KHz, 1 SC, RU 32ms, TBS=0, BPSK, 23dBm, Band 3, 2, 25, 4, 1, 66

	68	300	15KHz, 12 SC, RU 1ms, TBS=5, QPSK, 21dBm, Band 71
	88	950	15KHz, 12 SC, RU 1ms, TBS=5, QPSK, 23dBm, Band 85, 28, 12
	78	800	15KHz, 12 SC, RU 1ms, TBS=5, QPSK, 23dBm, Band 13, 26, 5, 18, 19, 20, 8
	77	730	15KHz, 12 SC, RU 1ms, TBS=5, QPSK, 23dBm, Band 3, 2, 25, 4, 1, 66
GPRS	300	2000	1TX + 1RX, CS1, GMSK, Band 850, 900
	170	1000	1TX + 1RX, CS1, GMSK, Band 1800, 1900

4.3. General Design Rules

The principal guidelines for the Power Supply Design embrace three different design steps:

- the electrical design of the power supply
- the thermal design
- the PCB layout

4.3.1. Electrical Design Guidelines of the power supply

The electrical design of the power supply depends strongly from the power source where this power is drained. We will distinguish them into three categories:

- +5V input (typically PC internal regulator output)
- +12V input (typically automotive)
- Battery

4.3.1.1. +5V Source Power Supply Design Guidelines

- The desired output for the power supply is 3.8V, hence there's not a big difference between the input source and the desired output and a linear regulator can be used. A switching power supply will not be suited because of the low drop out requirements.
- When using a linear regulator, a proper heat sink shall be provided in order to dissipate the power generated.
- A Bypass low ESR capacitor of adequate capacity must be provided in order to cut the current absorption peaks close to the Module, a 100µF capacitor is usually suited.
- Make sure the low ESR capacitor on the power supply output rated at least 10V.

An example of linear regulator with 5V input is:

4.3.1.2. +12V Source Power Supply Design Guidelines

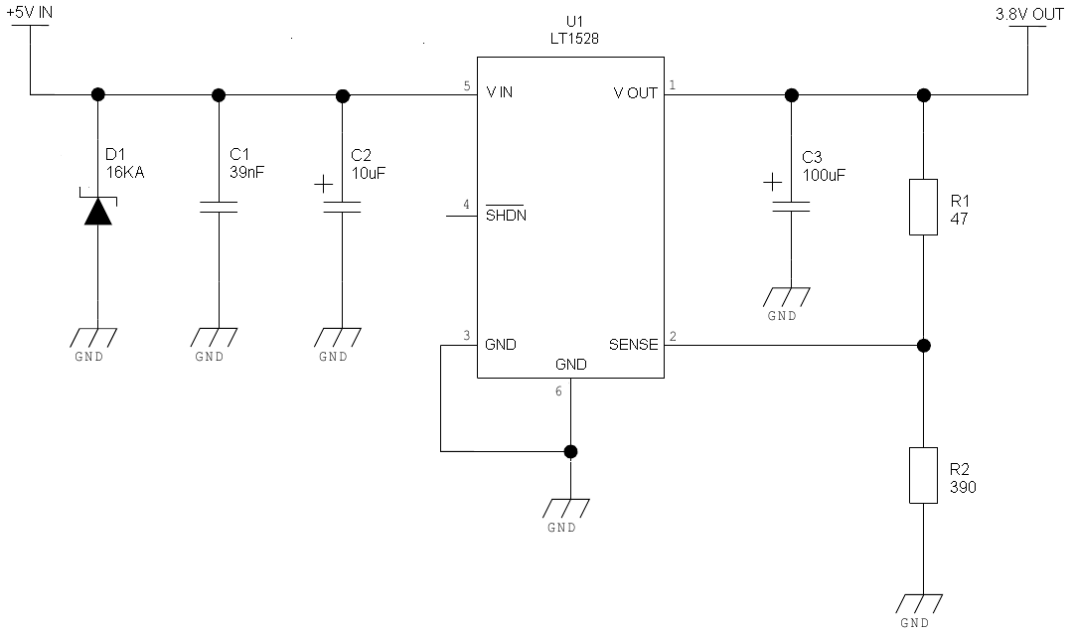

- The desired output for the power supply is 3.8V, hence due to the big difference between the input source and the desired output, a linear regulator is not suited and shall not be used. A switching power supply will be preferable because of its better efficiency.
- When using a switching regulator, a 500kHz or more switching frequency regulator is preferable because of its smaller inductor size and its faster transient response. This allows the regulator to respond quickly to the current peaks absorption.
- In any case the frequency and Switching design selection is related to the application to be developed due to the fact the switching frequency could also generate EMC interferences.
- For car PB battery the input voltage can rise up to 15,8V and this should be kept in mind when choosing components: all components in the power supply must withstand this voltage.
- A Bypass low ESR capacitor of adequate capacity must be provided in order to cut the current absorption peaks, a 100µF capacitor is usually suited.
- Make sure the low ESR capacitor on the power supply output is rated at least 10V.
- For Car applications a spike protection diode should be inserted close to the power input, in order to clean the supply from spikes.

An example of switching regulator with 12V input is in the below schematic:

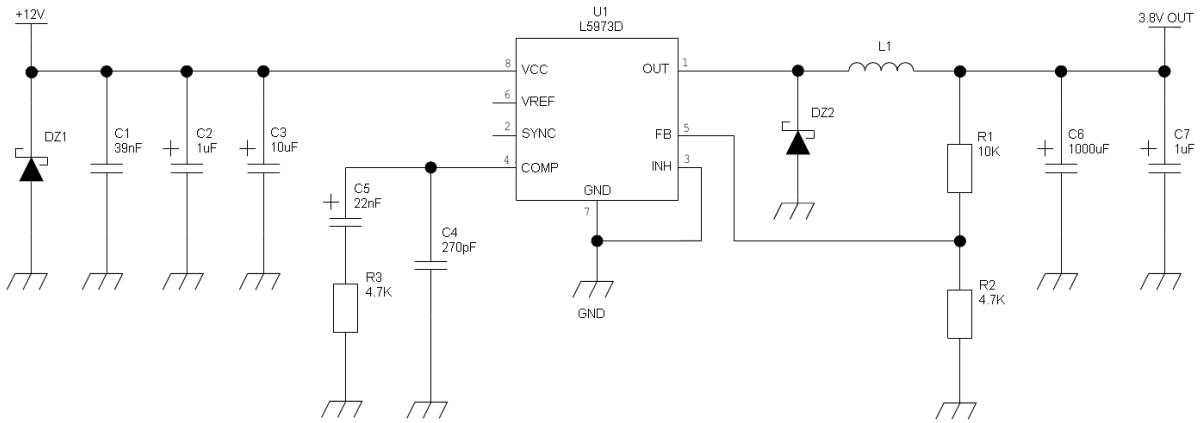

4.3.1.3. Battery Source Power Supply Design Guidelines

The desired nominal output for the power supply is 3.8V and the maximum voltage allowed is 4.2V, hence a single 3.7V Li-Ion cell battery type is suited for supplying the power to the Telit ME910G1 module.

- A Bypass low ESR capacitor of adequate capacity must be provided in order to cut the current absorption peaks, a 100µF tantalum capacitor is usually suited.
- Make sure the low ESR capacitor (usually a tantalum one) is rated at least 10V.
- A protection diode should be inserted close to the power input, in order to save the ME910G1 from power polarity inversion. Otherwise the battery connector should be done in a way to avoid polarity inversions when connecting the battery.
- The battery must be rated to supply peaks of current up to 0.6 A for LTE.

NOTE:
DON'T USE any Ni-Cd, Ni-MH, and Pb battery types directly connected with ME910G1. Their use can lead to overvoltage on the ME910G1 and damage it. USE ONLY Li-Ion battery types.

4.3.2. Thermal Design Guidelines

Worst case as reference values for thermal design of ME910G1 are:

- Average current consumption: 250 mA (LTE CAT M1 and NB1 modes)
- Average current consumption: 600 mA (GPRS and EDGE modes)
- Supply voltage: 4.50V

NOTE:
Make PCB design in order to have the best connection of GND pads to large surfaces of copper.

NOTE:
The ME910G1 includes a function to prevent overheating.

4.3.3. Power Supply PCB layout Guidelines

As seen on the electrical design guidelines the power supply shall have a low ESR capacitor on the output to cut the current peaks on the input to protect the supply from spikes The placement of this component is crucial for the correct working of the circuitry. A misplaced component can be useless or can even decrease the power supply performances.

- The Bypass low ESR capacitor must be placed close to the Telit ME910G1 power input pads or in the case the power supply is a switching type it can be placed close to the inductor to cut the ripple provided the PCB trace from the capacitor to the

ME910G1 is wide enough to ensure a voltage dropless connection even during an 0.6 A (LTE) or 2A (GSM) current peak.

- The protection diode must be placed close to the input connector where the power source is drained.

- The PCB traces from the input connector to the power regulator IC must be wide enough to ensure no voltage drops occur when an 2 A current peak is absorbed (valid only for product supporting GSM mode).

- The PCB traces to the ME910G1 and the Bypass capacitor must be wide enough to ensure no significant voltage drops occur. This is for the same reason as previous point. Try to keep this trace as short as possible.

- To reduce the EMI due to switching, it is important to keep very small the mesh involved; thus the input capacitor, the output diode (if not embodied in the IC) and the regulator have to form a very small loop.This is done in order to reduce the radiated field (noise) at the switching frequency (100-500 kHz usually).

- A dedicated ground for the Switching regulator separated by the common ground plane is suggested.

- The placement of the power supply on the board should be done in such a way to guarantee that the high current return paths in the ground plane are not overlapped to any noise sensitive circuitry as the microphone amplifier/buffer or earphone amplifier.

- The power supply input cables should be kept separate from noise sensitive lines such as microphone/earphone cables.

- The insertion of EMI filter on VBATT pins is suggested in those designs where antenna is placed close to battery or supply lines. A ferrite bead like Murata BLM18EG101TN1 or Taiyo Yuden P/N FBMH1608HM101 can be used for this purpose.
- The below figure shows the recommended circuit:

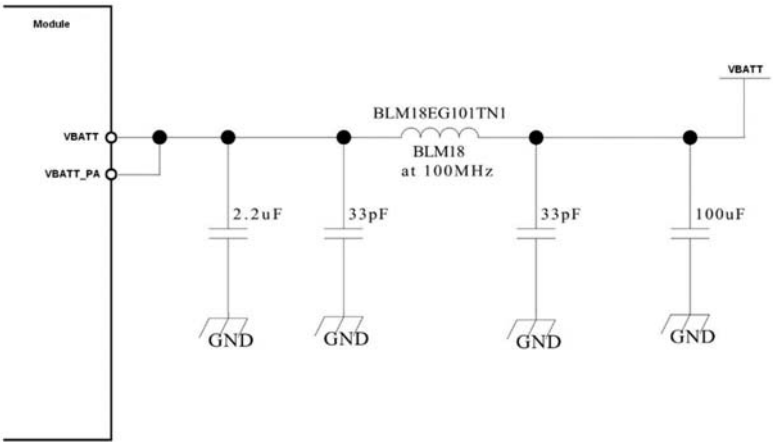
Module
VBATT
VBATT_PA
VBATT
BLM18EG101TN1
BLM18
at 100MHz
2.2uF
33pF
33pF
100uF
GND
GND
GND
GND

4.4. VAUX Power Output

A regulated power supply output is provided in order to supply small devices from the module, like: level translators, audio codec, sensors, and others.

Pin R11 can be used also as PWRMON (module powered ON indication) function, because is always active when the module is powered ON and cannot be set to LOW level by any AT command.

Host can only detect deep sleep mode by monitoring of VAUX/PWRMON output pin, since there is no pin dedicated to PSM status indicator.

The operating range characteristics of the supply are:

Item	Min	Typical	Max
Output voltage	1.78V	1.80V	1.82V
Output current	-	-	60mA
Output bypass capacitor (inside the module)		1uF	

If power saving configuration is enabled by AT+CPSMS Command, VAUX during deep sleep mode period is OFF

4.5. RTC Supply

RTC is functional when ME910G1 is in PSM or OFF state and VBATT pin is supplied.

RTC settings are erased if VBATT supply is temporary disconnected.

5. DIGITAL SECTION

ME910G1 has four main operation states:

OFF state: Vbatt is applied and only RTC is running. Baseband is switched OFF and the only change possible is the ON state.

ON state: baseband is fully switched on and ME910G1 is ready to accept AT commands.

ME910G1 can be idle or connected.

Sleep mode state: main baseband processor is intermittently switched ON and AT commands can be processed with some latency. ME910G1 is idle with low current consumption.

Deep sleep mode state: PSM defined in 3GPP Release 12. Baseband is switched OFF most of the time.

5.1. Logic Levels

Parameter	Min	Max
ABSOLUTE MAXIMUM RATINGS – NOT FUNCTIONAL		
Input level on any digital pin (CMOS 1.8) with respect to ground	-0.3V	2.1V
Operating Range - Interface levels (1.8V CMOS)		
Input high level	1.5V	1.9V
Input low level	0V	0.35V
Output high level	1.6V	1.9V
Output low level	0V	0.2V

Parameter	AVG
CURRENT CHARACTERISTICS:	
Output Current	1mA
Input Current	1uA

5.2. Power On

To turn on the ME910G1 the pad ON_OFF*/WAKE* must be tied low for at least 5 second and then released.

The maximum current that can be drained from the ON_OFF*/WAKE* pad is 0,1 mA.

ON_OFF*/WAKE* pad can make an asynchronous wakeup of the system from the PSM Mode, before the scheduled event of timer T3412 expired.

To make asynchronous exit from PSM mode ON_OFF*/WAKE* pin must be set LOW for at least 5 seconds.

Figure 1 illustrates a simple circuit to power on the module using an inverted buffer output.

Figure 1: Power-on Circuit

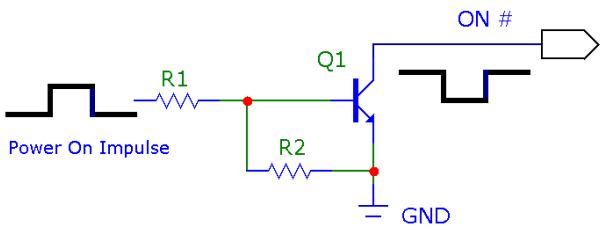

NOTE:

Don't use any pull up resistor on the ON_OFF*/WAKE* line, it is internally pulled up. Using pull up resistor may bring to latch up problems on the ME910G1 power regulator and improper power on/off of the module. The line ON_OFF*/WAKE* must be connected only in open collector or open drain configuration.

In this document all the lines that are inverted, hence have active low signals are labelled with a name that ends with"#","*" or with a bar over the name.

To check if the device has powered on, the hardware line PWRMON should be monitored.

A flow chart showing the proper turn on procedure is displayed below:

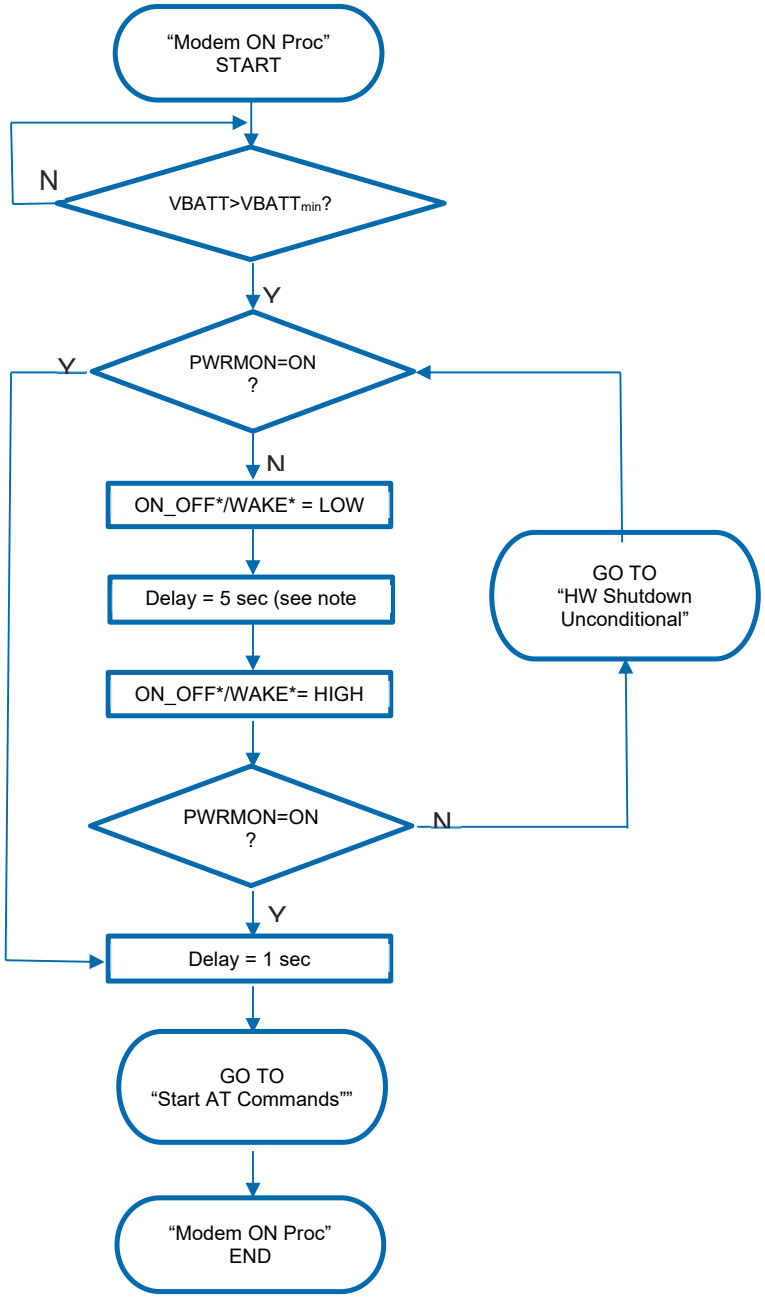

A flow chart showing the AT commands managing procedure is displayed below:

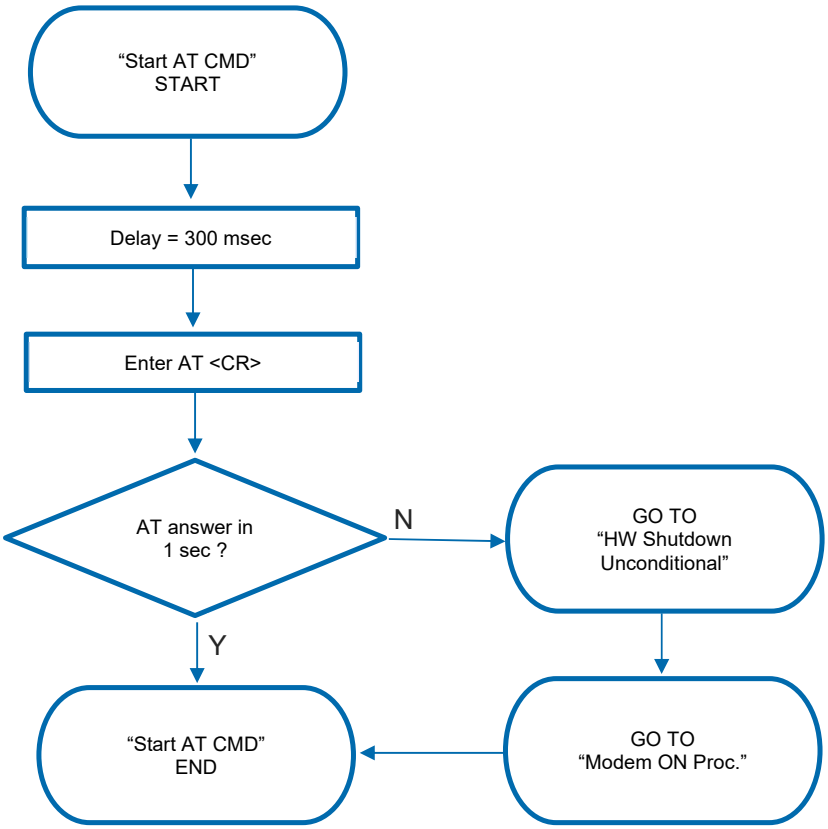

NOTE:
In order to avoid a back powering effect it is recommended to avoid having any HIGH logic level signal applied to the digital pins of the ME910G1 when the module is powered off or during an ON-OFF transition.

For example:

1- Let's assume you need to drive the ON_OFF*/WAKE* pad with a totem pole output of a +3/5 V microcontroller (uP_OUT1):

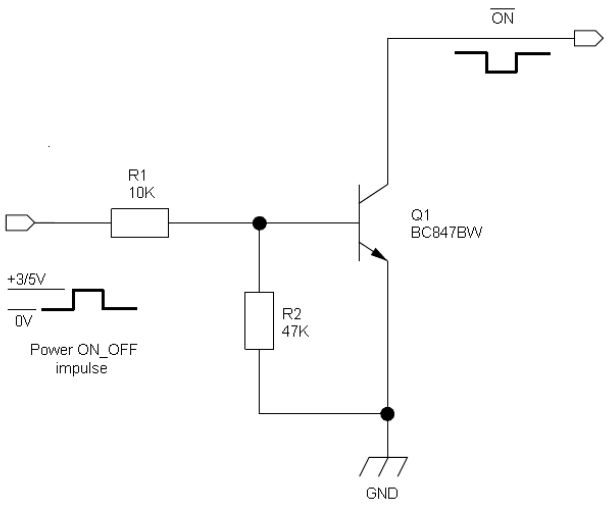

2- Let's assume you need to drive the ON_OFF*/WAKE* pad directly with an ON/OFF button:

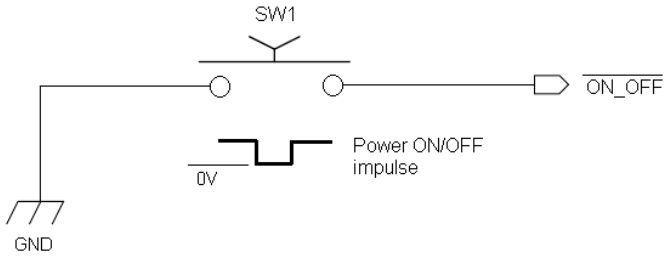

WARNING

It is recommended to set the ON_OFF*/WAKE* line LOW to power on the module only after VBATT is higher than 3.20V.

In case this condition it is not satisfied you could use the HW_SHUTDOWN* line to recover it and then restart the power on activity using the ON_OFF*/WAKE* line.

An example of this is described in the following diagram.

After HW_SHUTDOWN* is released you could again use the ON_OFF*/WAKE* line to power on the module.

5.3. Power Off

Turning off of the device can be done in two ways:

- via AT command (see ME910G1 Software User Guide, AT#SHDN)
- pin ON_OFF*/WAKE* for at least 3 seconds

Either ways, the device issues a detach request to network informing that the device will not be reachable any more.

NOTE:
To check if the device has been powered off or IN PSM mode, the hardware line PWRMON must be monitored. The device is powered off when PWRMON goes low.

In order to avoid a back powering effect it is recommended to avoid having any HIGH logic level signal applied to the digital pins of the ME910G1 when the module is powered off or during an ON-OFF transition.

WARNING:

Not following the recommended shut-down procedures might damage the device and consequently void the warranty.

The following flow chart shows the proper turn off procedure:

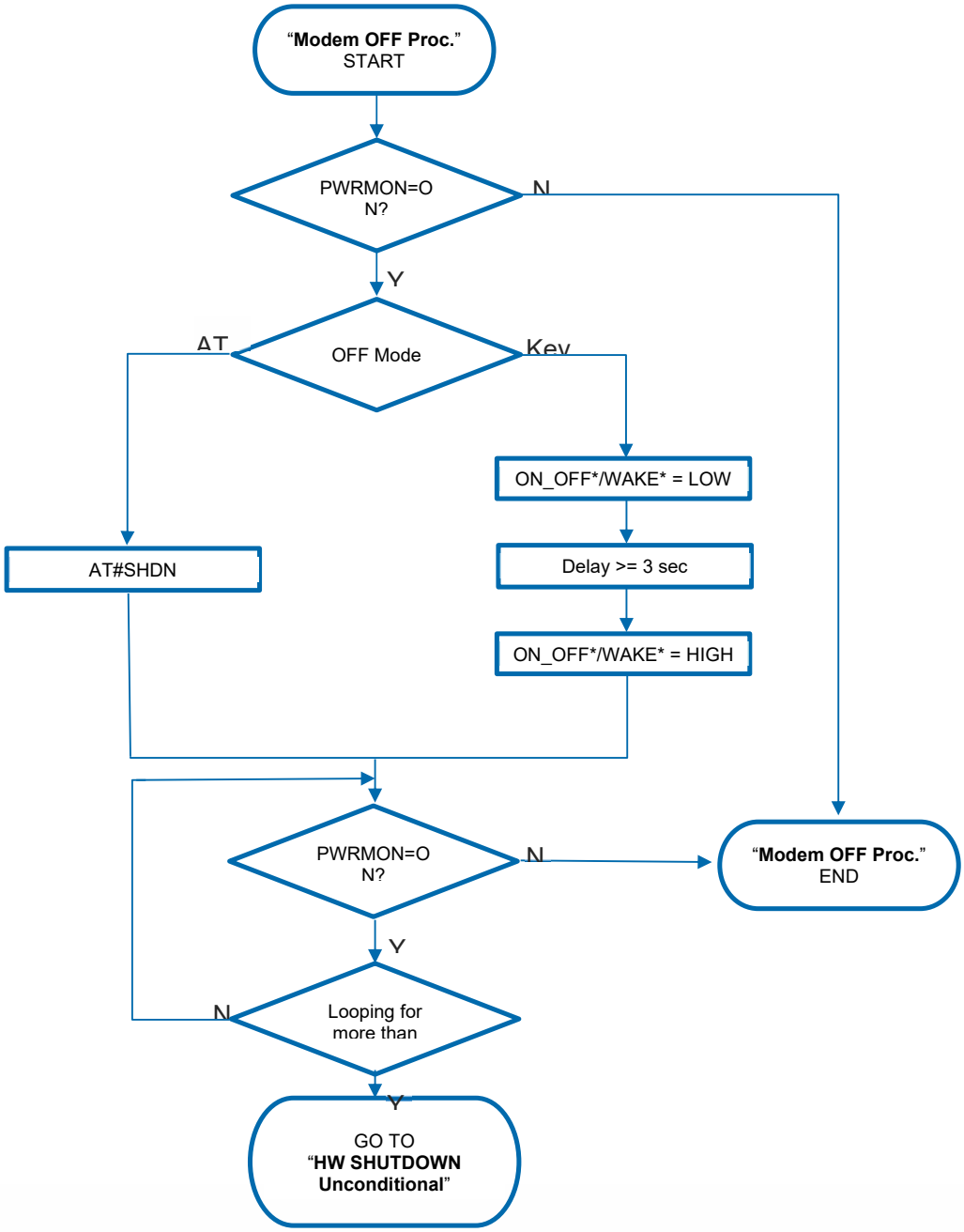

5.4. Wake from deep sleep mode

ME910G1 supports Power Saving Mode (PSM) functionality defined in 3GPP Release 12. When Periodic Update Timer expires, ME910G1 power off until the next scheduled wake-up time.

Asynchronous event controlled by host can wake up from deep sleep mode by asserting ON_OFF*/WAKE* pin LOW for at least 5 seconds.

Host can detect deep sleep mode by polling VAUX/PWRMON pin if previously configured.

5.5. Unconditional Shutdown

HW_SHUTDOWN* is used to unconditionally shutdown the ME910G1. Whenever this signal is pulled low, the ME910G1 is reset. When the device is reset it stops any operation. After the release of the line, the ME910G1 is unconditionally shut down, without doing any detach operation from the network where it is registered. This behaviour is not a proper shut down because any cellular device is requested to issue a detach request on turn off. The HW_SHUTDOWN* is internally controlled on start-up to achieve always a proper power-on reset sequence, so there's no need to control this pin on start-up.

To unconditionally shutdown the ME910G1, the pad HW_SHUTDOWN* must be tied low for at least 200 milliseconds and then released.

The signal is internally pulled up so the pin can be left floating if not used.

If used, then it **must always be connected with an open collector transistor**, to permit to the internal circuitry the power on reset and under voltage lockout functions.

During PSM mode, HW_SHUTDOWN toggle has no effect. The use of HW_SHUTDOWN* pin is valid only when ME910G1 has VAUX/PWRMON output HI.

PIN DESCRIPTION

Signal	Function	I/O	PAD
HW_SHUTDOWN*	Unconditional Shutdown of the Module	I	R13

WARNING:
The hardware unconditional Shutdown must not be used during normal operation of the device since it does not detach the device from the network. It shall be kept as an emergency exit procedure.

A typical circuit is the following:

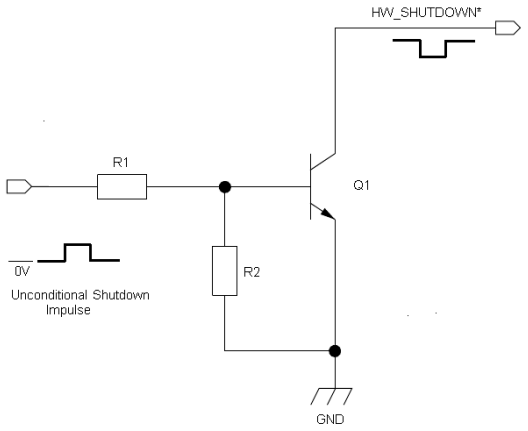

For example: Let us assume you need to drive the HW_SHUTDOWN* pad with a totem pole output of a +3/5 V microcontroller (uP_OUT2):

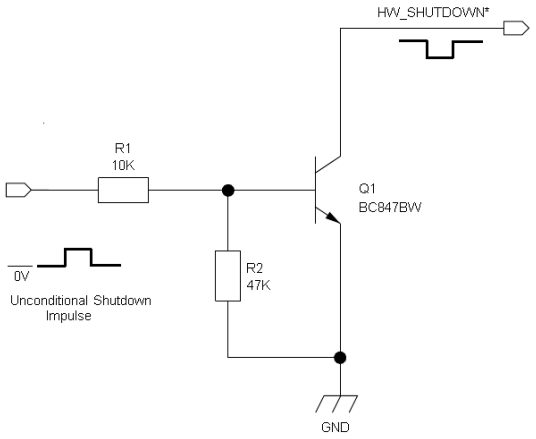

In the following flow chart is detailed the proper restart procedure:

NOTE:
In order to avoid a back powering effect it is recommended to avoid having any HIGH logic level signal applied to the digital pins of the ME910G1 when the module is powered off or during an ON-OFF transition.

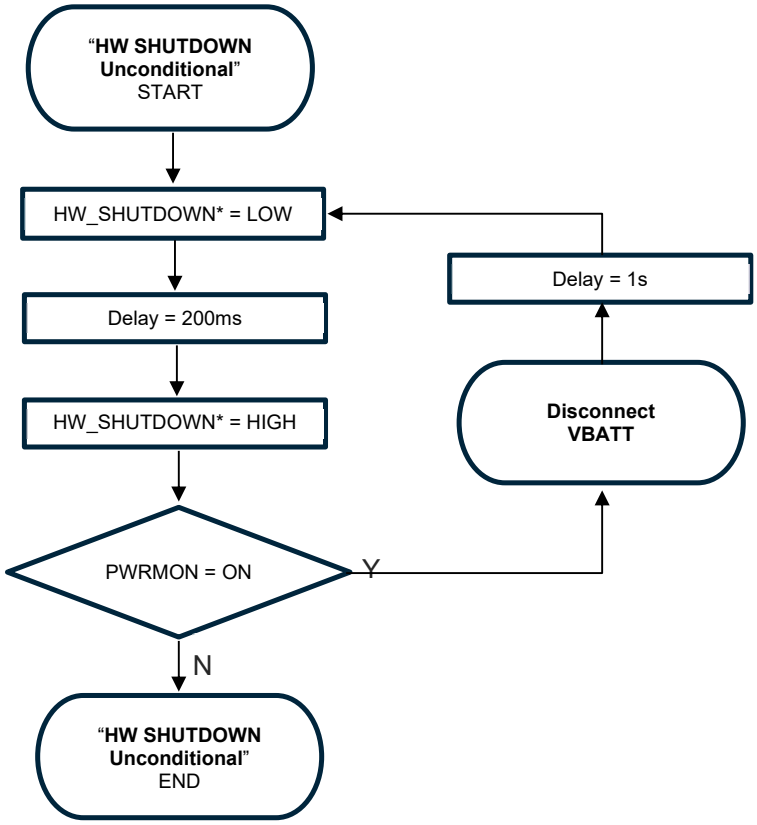

NOTE:
Do not use any pull up resistor on the HW_SHUTDOWN* line nor any totem pole digital output. Using pull up resistor may bring to latch up problems on the ME910G1 power regulator and improper functioning of the module.
To proper power on again the module please refer to the related paragraph (“Power ON”)
The unconditional hardware shutdown must always be implemented on the boards and should be used only as an emergency exit procedure.

5.6. Fast power down

The procedure to power off ME910G1 described in Chapter 5.3 normally takes more than 1 second to detach from network and make ME910G1 internal filesystem properly closed.
In case of unwanted supply voltage loss the system can be switched off without any risk of filesystem data corruption by implementing Fast Shut Down feature.
Fast Shut Down feature permits to reduce the current consumption and the time-to-poweroff to minimum values.

NOTE:
Refer to ME910G1 series AT command reference guide (Fast power down - #FASTSHDN) in order to set up detailed AT command.

5.6.1. Fast Shut Down by Hardware

The Fast Power Down can be triggered by configuration of any GPIO. HI level to LOW level transition of GPIO commands fast power down.

Example circuit:

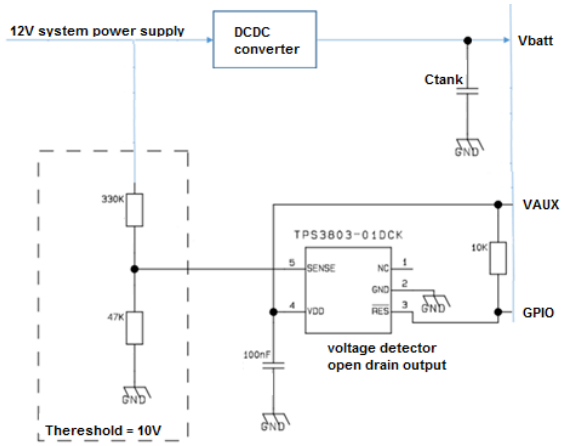

NOTE:
Consider voltage drop under max current conditions when defining the voltage detector thereshold in order to avoid unwanted shutdown.

The capacitor is rated with the following formula:

$$C = I \frac{\Delta t}{\Delta V}$$

TIP:
Make the same plot during system verification to check timings and voltage levels.

5.6.2. Fast Shut Down by Software

The Fast Power Down can be triggered by AT command.

5.7. Communication ports

5.7.1. USB 2.0 HS

The ME910G1 includes one integrated universal serial bus (USB 2.0 HS) transceiver. The following table is listing the available signals:

PAD	Signal	I/O	Function	NOTE
B15	USB_D+	I/O	USB differential Data (+)	
C15	USB_D-	I/O	USB differential Data (-)	
A13	VUSB	AI	Power sense for the internal USB transceiver.	Accepted range: 3.0V to 5.5V 100K pull down

The USB_DPLUS and USB_DMINUS signals have a clock rate of 480 MHz, therefore signal traces should be routed carefully. Trace lengths, number of vias and capacitive loading should be minimized. The characteristic impedance value should be as close as possible to 90 Ohms differential.

ESD protection can be added to USB D+/D- lines in case of external connector for cable connection.

Proper components for USB 2.0 must be used.

5.7.2. SPI

The ME910G1 Module is provided by a standard 3-wire master SPI interface + chip select control.

The following table is listing the available signals:

PAD	Signal	I/O	Function	Type	NOTE
D15	SPI_MOSI	O	SPI MOSI	CMOS 1.8V	Shared with TX_AUX
E15	SPI_MISO	I	SPI MISO	CMOS 1.8V	Shared with RX_AUX
F15	SPI_CLK	O	SPI Clock	CMOS 1.8V	
H14	SPI_CS	O	SPI Chip Select	CMOS 1.8V	

NOTE:
Due to the shared functions, SPI port and TX_AUX/RX_AUX port cannot be used simultanously.

Refer to ME910G1 series AT command reference guide for port configuration.

5.7.2.1. SPI Connections

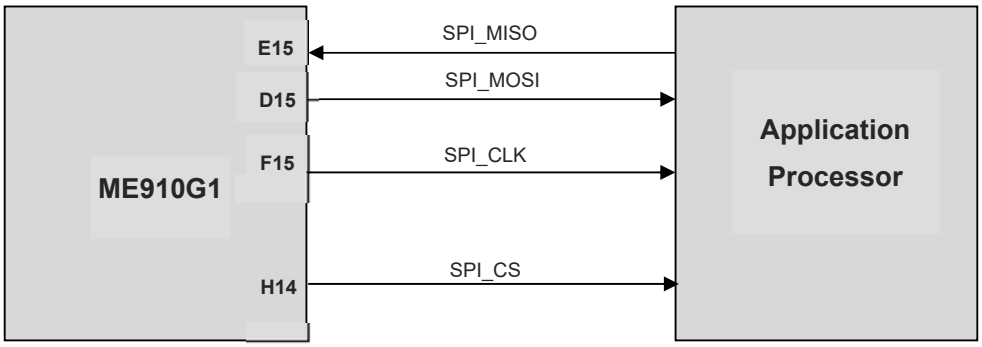

5.7.3. Serial Ports

The ME910G1 module is provided with by 2 Asynchronous serial ports:

- MODEM SERIAL PORT 1 (Main)
- MODEM SERIAL PORT 2 (Auxiliary)

Several configurations can be designed for the serial port on the OEM hardware, but the most common are:

- RS232 PC com port
- microcontroller UART @ 1.8V (Universal Asynchronous Receive Transmit)
- microcontroller UART @ 5V or other voltages different from 1.8V

Depending from the type of serial port on the OEM hardware a level translator circuit may be needed to make the system work. On the ME910G1 the ports are CMOS 1.8.

5.7.3.1. Modem serial port 1 (USIF0)

The serial port 1 on the ME910G1 is a +1.8V UART with all the 7 RS232 signals. It differs from the PC-RS232 in the signal polarity (RS232 is reversed) and levels.

The following table is listing the available signals:

RS232 Pin	Signal	PAD	Name	Usage
1	C109/DCD	**N14**	Data Carrier Detect	Output from the ME910G1 that indicates the carrier presence
2	C104/RXD	**M15**	Transmit line *see Note	Output transmit line of ME910G1 UART
3	C103/TXD	**N15**	Receive line *see Note	Input receive of the ME910G1 UART
4	C108/DTR	**M14**	Data Terminal Ready	Input to the ME910G1 that controls the DTE READY condition
6	C107/DSR	**P14**	Data Set Ready	Output from the ME910G1 that indicates the module is ready
7	C105/RTS	**L14**	Request to Send	Input to the ME910G1 that controls the Hardware flow control
8	C106/CTS	**P15**	Clear to Send	Output from the ME910G1 that controls the Hardware flow control
9	C125/RING	**R14**	Ring Indicator	Output from the ME910G1 that indicates the incoming call condition

NOTE:
According to V.24, some signal names are referred to the application side, therefore on the ME910G1 side these signal are on the opposite direction:
TXD on the application side will be connected to the receive line (here named C103/TXD)
RXD on the application side will be connected to the transmit line (here named C104/RXD)

For a minimum implementation, only the TXD, RXD lines can be connected, the other lines can be left open provided a software flow control is implemented.

In order to avoid a back powering effect it is recommended to avoid having any HIGH logic level signal applied to the digital pins of the ME910G1 when the module is powered off or during an ON/OFF transition.

5.7.3.2. Modem serial port 2 (USIF1)

The secondary serial port on the ME910G1 is a CMOS1.8V with only the RX and TX signals.
The signals of the ME910G1 serial port are:

PAD	Signal	I/O	Function	Type	NOTE
D15	TX_AUX	O	Auxiliary UART (TX Data to DTE)	CMOS 1.8V	Shared with SPI_MOSI
E15	RX_AUX	I	Auxiliary UART (RX Data from DTE)	CMOS 1.8V	Shared with SPI_MISO

NOTE:
Due to the shared functions, TX_AUX/RX_AUX port and SPI port cannot be used simultanously.

In order to avoid a back powering effect it is recommended to avoid having any HIGH logic level signal applied to the digital pins of the ME910G1 when the module is powered off or during an ON/OFF transition.

Refer to ME910G1 series AT command reference guide for port configuration.

5.7.3.3. RS232 level translation

In order to interface the ME910G1 with a PC com port or a RS232 (EIA/TIA-232) application a level translator is required. This level translator must:

- invert the electrical signal in both directions;
- Change the level from 0/1.8V to +15/-15V.

Actually, the RS232 UART 16450, 16550, 16650 & 16750 chipsets accept signals with lower levels on the RS232 side (EIA/TIA-562), allowing a lower voltage-multiplying ratio on the level translator. Note that the negative signal voltage must be less than 0V and hence some sort of level translation is always required.
The simplest way to translate the levels and invert the signal is by using a single chip level translator. There are a multitude of them, differing in the number of drivers and receivers and in the levels (be sure to get a true RS232 level translator not a RS485 or other standards).
By convention the driver is the level translator from the 0-1.8V UART to the RS232 level. The receiver is the translator from the RS232 level to 0-1.8V UART.
In order to translate the whole set of control lines of the UART you will need:

- 5 drivers

- 3 receivers

An example of RS232 level adaptation circuitry could be done using a MAXIM transceiver (MAX218)
In this case the chipset is capable to translate directly from 1.8V to the RS232 levels (Example done on 4 signals only).

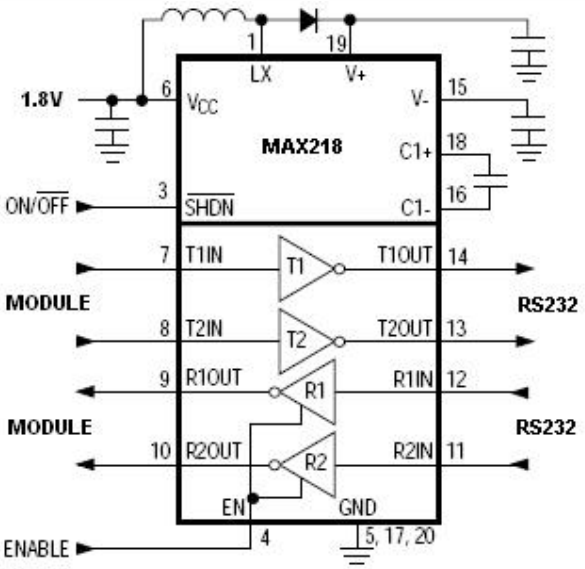

The RS232 serial port lines are usually connected to a DB9 connector with the following layout:

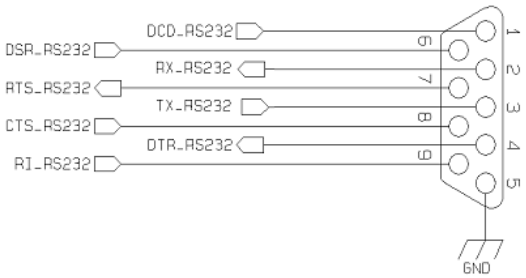

5.8. General purpose I/O

The ME910G1 module is provided by a set of Configurable Digital Input / Output pins (CMOS 1.8V). Input pads can only be read; they report the digital value (high or low) present on the pad at the read time. Output pads can only be written or queried and set the value of the pad output.

An alternate function pad is internally controlled by the ME910G1 firmware and acts depending on the function implemented.

The following table shows the available GPIO on the ME910G1:

PAD	Signal	I/O	Output Drive Strength	Default State	NOTE
C8	GPIO_01	I/O	1mA	INPUT – PD (100K)	Alternate function STAT LED
C9	GPIO_02	I/O	1mA	INPUT – PD (100K)	
C10	GPIO_03	I/O	1mA	INPUT – PD (100K)	
C11	GPIO_04	I/O	1mA	INPUT – PD (100K)	
B14	GPIO_05	I/O	1mA	INPUT – PD (100K)	
C12	GPIO_06	I/O	1mA	INPUT – PD (100K)	
C13	GPIO_07	I/O	1mA	INPUT – PD (100K)	(*)
K15	GPIO_08	I/O	1mA	INPUT – PD (100K)	
L15	GPIO_09	I/O	1mA	INPUT – PD (100K)	
G15	GPIO_10	I/O	1mA	INPUT – PD (100K)	

5.8.1. Using a GPIO as INPUT

The GPIO pads, when used as inputs, can be connected to a digital output of another device and report its status, provided this device has interface levels compatible with the 1.8V CMOS levels of the GPIO.

If the digital output of the device to be connected with the GPIO input pad of ME910G1 has interface levels different from the 1.8V CMOS, then it can be buffered with an open collector transistor with a 47K pull up to 1.8V supplied by VAUX/POWERMON R11 pad.

NOTE:

In order to avoid a back powering effect it is recommended to avoid having any HIGH logic level signal applied to the digital pins of the ME910G1 when the module is powered off or during an ON/OFF transition.

Refer to ME910G1 series AT command reference guide for GPIO pins configuration.

5.8.2. Using a GPIO as OUTPUT

The GPIO pads, when used as outputs, can drive 1.8V CMOS digital devices or compatible hardware. When set as outputs, the pads have a push-pull output and therefore the pull-up resistor may be omitted.

5.8.3. Indication of network service availability

The STAT_LED pin status shows information on the network service availability and Call status.

The function is available as alternate function of GPIO_01 (to be enabled using the AT#GPIO=1,0,2 command).

In the ME910G1 modules, the STAT_LED needs an external transistor to drive an external

LED and its voltage level is defined accordingly to the table below:.

Device Status	Led Status
Device off	Permanently off
Not Registered	Permanently on
Registered in idle	Blinking 1sec on + 2 sec off
Registered in idle + power saving	It depends on the event that triggers the wakeup (In sync with network paging)
Connecting	Blinking 1 sec on + 2 sec off

The reference schematic for LED indicator,

R3 must be calculated taking in account VBATT value and LED type. :

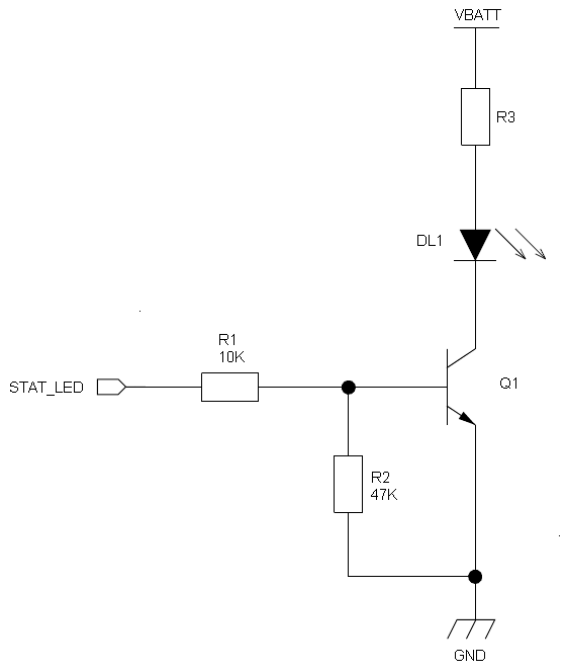

5.9. External SIM Holder

Please refer to the related User Guide (SIM Holder Design Guides, 80000NT10001a).

5.10. ADC Converter

The ME910G1 is provided by one AD converter. It is able to read a voltage level in the range of 0÷1.8 volts applied on the ADC pin input, store and convert it into 10 bit word. The input line is named as **ADC_IN1** and it is available on Pad **B1**

The following table is showing the ADC characteristics:

Item	Min	Typical	Max	Unit
Input Voltage range	0	-	1.8	Volt
AD conversion	-	-	10	bits
Input Resistance	1	-	-	Mohm
Input Capacitance	-	1	-	pF

The ADC could be controlled using an AT command.
The command is ***AT#ADC=1,2***
The read value is expressed in mV

Refer to SW User Guide or AT Commands Reference Guide for the full description of this function.

6. RF SECTION

6.1. Bands Variants

See section 2.2.

6.2. TX Output power

See section 2.5.

6.3. RX Sensitivity

See section 2.6.

6.4. Antenna requirements

The antenna connection and board layout design are the most important aspect in the full product design as they strongly affect the product overall performances, hence read carefully and follow the requirements and the guidelines for a proper design.

The antenna and antenna transmission line on PCB for a Telit ME310G1 device shall fulfil the following requirements:

Item	Value
Frequency range	Depending by frequency band(s) provided by the network operator, the customer shall use the most suitable antenna for that/those band(s)
Bandwidth	250 MHz in LTE Band 1 140 MHz in LTE Band 2, PCS1900 170 MHz in LTE Band 3, DCS1800 445 MHz in LTE Band 4 70 MHz in LTE Band 5, GSM850 80 MHz in LTE Band 8, GSM900 47 MHz in LTE Band 12 41 MHz in LTE Band 13 60 MHz in LTE Band 18 60 MHz in LTE Band 19 71 MHz in LTE Band 20 145 MHz in LTE Band 25 80 MHz in LTE Band 26 62 MHz in LTE Band 27 100 MHz in LTE Band 28 490 MHz in LTE Band 66

	81 MHz in LTE Band 71 48 MHz in LTE Band 85
Impedance	50 ohm
Input power	ME310G1-W1: > 24dBm Average power ME310G1-WW: > 33dBm Average power
VSWR absolute max	≤ 10:1 (limit to avoid permanent damage)
VSWR recommended	≤ 2:1 (limit to fulfill all regulatory requirements)

6.4.1. PCB Design guidelines

When using the ME910G1, since there's no antenna connector on the module, the antenna must be connected to the ME910G1 antenna pad (K1) by means of a transmission line implemented on the PCB.

This transmission line shall fulfil the following requirements:

Item	Value
Characteristic Impedance	50 ohm (+-10%)
Max Attenuation	0,3 dB
Coupling	Coupling with other signals shall be avoided
Ground Plane	Cold End (Ground Plane) of antenna shall be equipotential to the ME910G1 ground pins

The transmission line should be designed according to the following guidelines:

- Make sure that the transmission line's characteristic impedance is 50 ohm;
- Keep line on the PCB as short as possible, since the antenna line loss shall be less than about 0,3 dB;
- Line geometry should have uniform characteristics, constant cross section, avoid meanders and abrupt curves;
- Any kind of suitable geometry / structure (Microstrip, Stripline, Coplanar, Grounded Coplanar Waveguide...) can be used for implementing the printed transmission line afferent the antenna;

- If a Ground plane is required in line geometry, that plane has to be continuous and sufficiently extended, so the geometry can be as similar as possible to the related canonical model;
- Keep, if possible, at least one layer of the PCB used only for the Ground plane; If possible, use this layer as reference Ground plane for the transmission line;
- It is wise to surround (on both sides) the PCB transmission line with Ground, avoid having other signal tracks facing directly the antenna line track.
- Avoid crossing any un-shielded transmission line footprint with other signal tracks on different layers;
- The ground surrounding the antenna line on PCB has to be strictly connected to the main Ground Plane by means of via holes (once per 2mm at least), placed close to the ground edges facing line track;
- Place EM noisy devices as far as possible from ME910G1 antenna line;
- Keep the antenna line far away from the ME910G1 power supply lines;
- If EM noisy devices (such as fast switching ICs, LCD and so on) are present on the PCB hosting the ME910, take care of the shielding of the antenna line by burying it in an inner layer of PCB and surround it with Ground planes, or shield it with a metal frame cover.
- If EM noisy devices are not present around the line, the use of geometries like Microstrip or Grounded Coplanar Waveguide has to be preferred, since they typically ensure less attenuation if compared to a Stripline having same length;

The following image is showing the suggested layout for the Antenna pad connection:

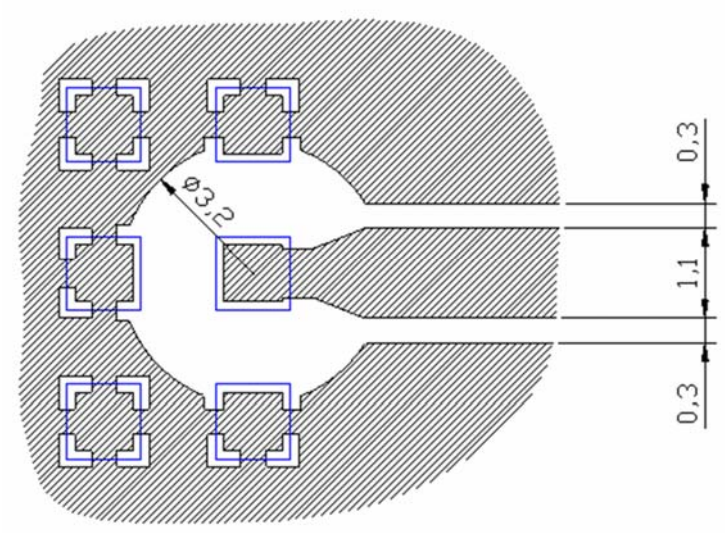

6.4.2. PCB Guidelines in case of FCC Certification

In the case FCC certification is required for an application using ME910G1, according to FCC KDB 996369 for modular approval requirements, the transmission line has to be similar to that implemented on ME910G1 interface board and described in the following chapter.

6.4.2.1. Transmission line design

During the design of the ME910G1 interface board, the placement of components has been chosen properly, in order to keep the line length as short as possible, thus leading to lowest power losses possible. A Grounded Coplanar Waveguide (G-CPW) line has been chosen, since this kind of transmission line ensures good impedance control and can be implemented in an outer PCB layer as needed in this case. A SMA female connector has been used to feed the line.

The interface board is realized on a FR4, 4-layers PCB. Substrate material is characterized by relative permittivity εr = 4.6 ± 0.4 @ 1 GHz, TanD= 0.019 ÷ 0.026 @ 1 GHz.

A characteristic impedance of nearly 50 Ω is achieved using trace width = 1.1 mm, clearance from coplanar ground plane = 0.3 mm each side. The line uses reference ground plane on layer 3, while copper is removed from layer 2 underneath the line. Height of trace above ground plane is 1.335 mm. Calculated characteristic impedance is 51.6 Ω, estimated line loss is less than 0.1 dB. The line geometry is shown below:

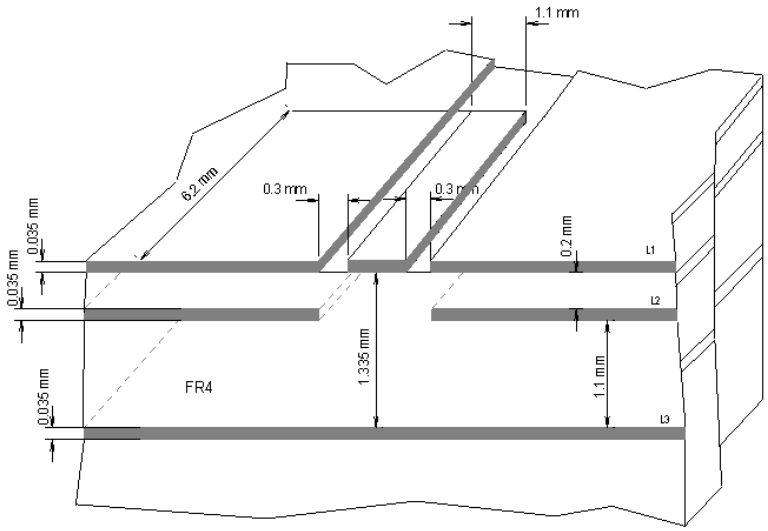

6.4.2.2. Transmission Line Measurements

An HP8753E VNA (Full-2-port calibration) has been used in this measurement session. A calibrated coaxial cable has been soldered at the pad corresponding to RF output; a SMA connector has been soldered to the board in order to characterize the losses of the transmission line including the connector itself. During Return Loss / impedance measurements, the transmission line has been terminated to 50 Ω load.
Return Loss plot of line under test is shown below:

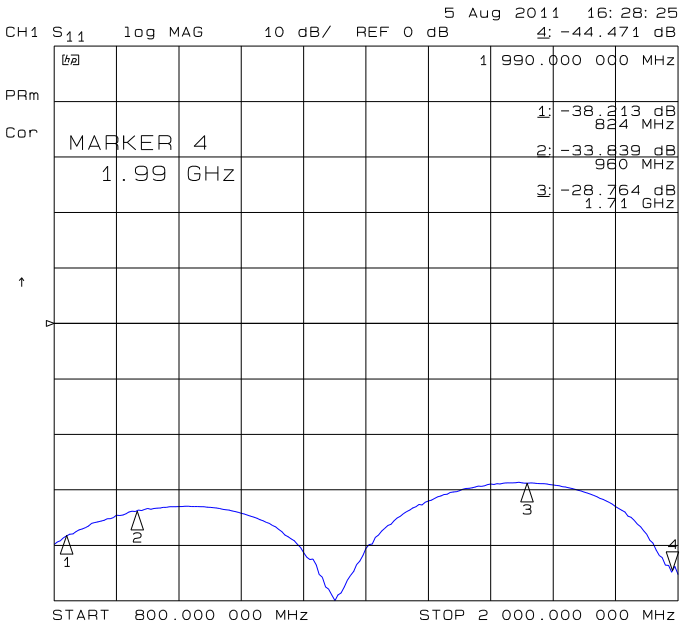

Line input impedance (in Smith Chart format, once the line has been terminated to 50 Ω load) is shown in the following figure:

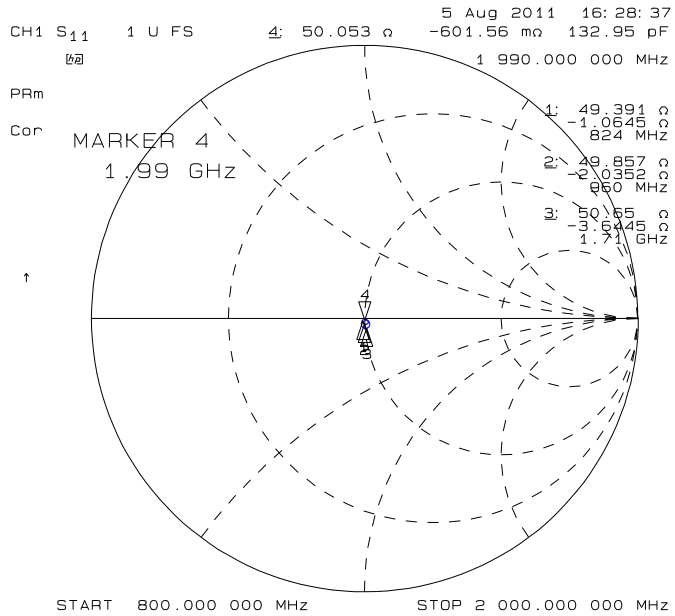

Insertion Loss of G-CPW line plus SMA connector is shown below:

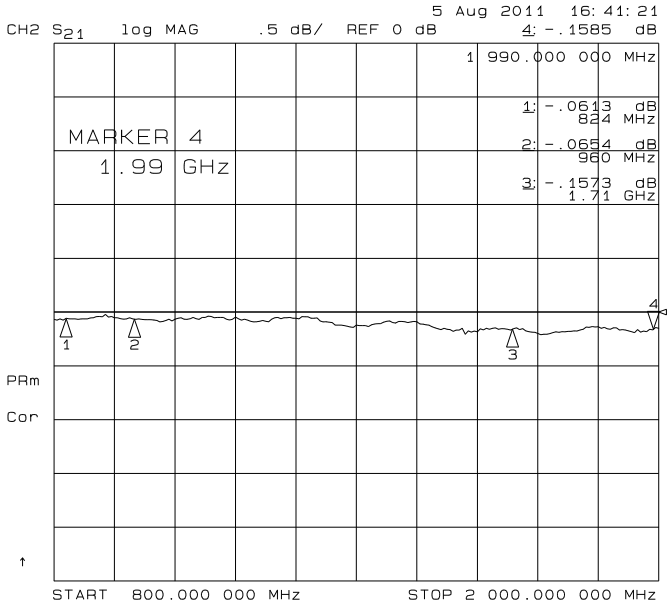

6.4.2.3. Antenna Installation Guidelines

- Install the antenna in a place covered by the LTE signal with CAT-M1 support.
- Antenna must not be installed inside metal cases
- Antenna must not be installed according Antenna manufacturer instructions
- Antenna integration should optimize the Radiation Efficiency. Efficiency values > 50% are recommended on all frequency bands
- Antenna integration should not perturb the radiation pattern described in Antenna manufacturer documentation.
- It is preferable to get an omnidirectional radiation pattern to
- Antenna Gain must not exceed values indicated in regulatory requirements, where applicable, in order to meet related EIRP limitations. Typical antenna Gain in most M2M applications does not exceed 2dBi
- If the device antenna is located farther than 20cm from the human body and there are no co-located transmitter then the Telit FCC/IC approvals can be re-used by the end product
- If the device antenna is located closer than 20cm from the human body or there are co-located transmitter then the additional FCC/IC testing may be required for the end product (Telit FCC/IC approvals cannot be reused)

7. AUDIO SECTION

The Telit digital audio interface (DVI) of the ME910G1 Module is based on the I^2S serial bus interface standard. The audio port can be connected to end device using digital interface, or via one of the several compliant codecs (in case an analog audio is needed).

7.1. Electrical Characteristics

The product is providing the DVI on the following pins:

Pin	Signal	I/O	Function	Internal Pull Up	Type
B9	DVI_WA0	I/O	Digital Audio Interface (Word Alignment / LRCLK)		CMOS 1.8V
B6	DVI_RX	I	Digital Audio Interface (RX)		CMOS 1.8V
B7	DVI_TX	O	Digital Audio Interface (TX)		CMOS 1.8V
B8	DVI_CLK	I/O	Digital Audio Interface (BCLK)		CMOS 1.8V

7.2. Codec examples

Please refer to the Digital Audio Application note.

8. GNSS SECTION

ME910G1 module includes a state-of-art receiver that can simultaneously search and track satellite signals from multiple satellite constellations. This multi-GNSS receiver uses the entire spectrum of GNSS systems available: GPS, GLONASS, BeiDou, Galileo, and QZSS.

8.1. GNSS Signals Pin-out

Pin	Signal	I/O	Function	Type
R9	ANT_GNSS	I	GNSS Antenna (50 ohm)	
R7	GNSS_LNA_EN	O	GNSS External LNA Enable	CMOS 1.8V

8.2. RF Front End Design

The ME910G1 Module contains a pre-select SAW filter but doesn't contain the LNA needed to reach the maximum sensitivity. Active antenna (antenna with a built-in low noise amplifier) must be used and must be supplied with proper bias-tee circuit.

8.2.1. Guidelines of PCB line for GNSS Antenna

- Ensure that the antenna line impedance is 50ohm.
- Keep the antenna line on the PCB as short as possible to reduce the loss.
- Antenna line must have uniform characteristics, constant cross section, avoid meanders and abrupt curves.
- Keep one layer of the PCB used only for the Ground plane, if possible.
- Surround (on both the sides, over and under) the antenna line on PCB with Ground, avoid having other signal tracks facing directly the antenna line of track.
- The ground around the antenna line on PCB has to be strictly connected to the Ground Plane by placing vias once per 2mm at least.
- Place EM noisy devices as far as possible from antenna line.
- Keep the antenna line far away from power supply lines.
- Keep the antenna line far away from GSM RF lines.
- If you have EM noisy devices around the PCB hosting the module, such as fast switching ICs, take care of the shielding of the antenna line by burying it inside the layers of PCB and surround it with Ground planes, or shield it with a metal frame cover.
- If you do not have EM noisy devices around the PCB hosting the module, use a strip-line on the superficial copper layer for the antenna line. The line attenuation will be lower than a buried one.

8.2.2. Hardware-based solution for GNSS and LTE coexistence

When in the user application a stand-alone GNSS receiver is present, the LTE transmission may desensitize the GNSS receiver in particular if the decoupling between LTE and GNSS antennas is low. A SAW filter can be added on LTE side, to protect GNSS receiver from LTE out-of-band emissions, as described in the schematic below.

When the GNSS receiver embedded in the ME310G1 module is used, there is no condition for degradation, because LTE part and GNSS part are never active simultaneously, therefore the filtering on the LTE side is not needed.

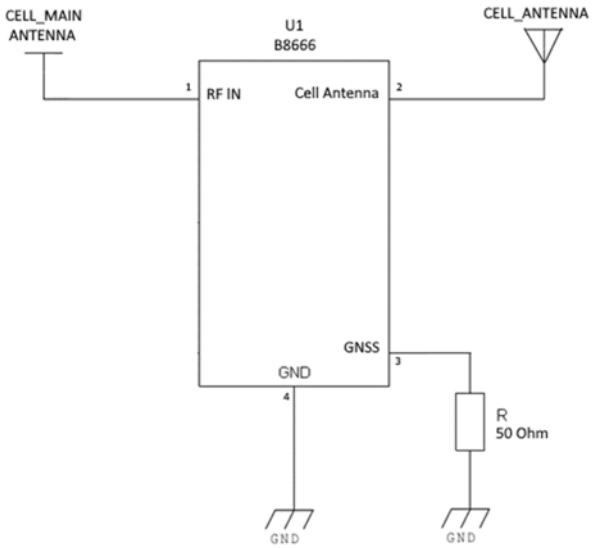

8.3. GNSS Antenna Requirements

GNSS active antenna must be used or integrated in the application.

8.3.1. GNSS Antenna specification

Item	Value
Frequency range	1559.0 ~ 1610.0 MHz
Gain	15 ~ 30dB
Impedance	50 ohm
Noise Figure of LNA	< 1.5 (recommended)

DC supply voltage	DC 1.8 ~ 3.3V
VSWR	≤ 3:1 (recommended)

8.3.2. GNSS Antenna – Installation Guidelines

- The antenna must be installed according to the antenna manufacturer's instructions to obtain the maximum performance of GNSS receiver.
- The antenna location must be evaluated carefully if operating in conjunction with any other antenna or transmitter.
- The antenna must not be installed inside metal cases or near any obstacle that may degrade features like antenna lobes and gain.

8.3.3. Powering the External LNA (active antenna)

The LNA of active antenna needs a source of power because 1.8V or 3V DC voltage needed by active antenna is not supplied by the ME910G1 module, but can be easily included by the host design.

The electrical characteristics of the GPS_LNA_EN signal are:

Level	Min	Max
Output High Level	1.6V	1.9V
Output Low Level	0V	0.3V

Example of external antenna bias circuitry:

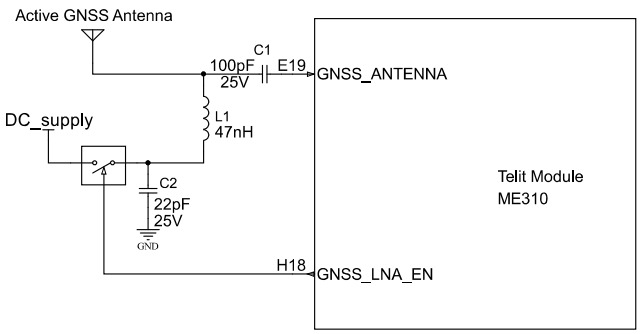

Be aware of max bias current in case of unwanted short on antenna cable, decoupling inductor may be damaged.

In case of LNA with 1.8V supply, VAUX/POWERMON pin can be used to supply active GNSS antenna

8.4. GNSS Characteristics

The table below specifies the GNSS characteristics and expected performance:

Parameters		Typical Measurement
Sensitivity	Tracking Sensitivity	-159 dBm
	Navigation	-155 dBm
	Cold Start	-144 dBm
Min Navigation update rate		1Hz

9. MECHANICAL DESIGN

9.1. Drawing

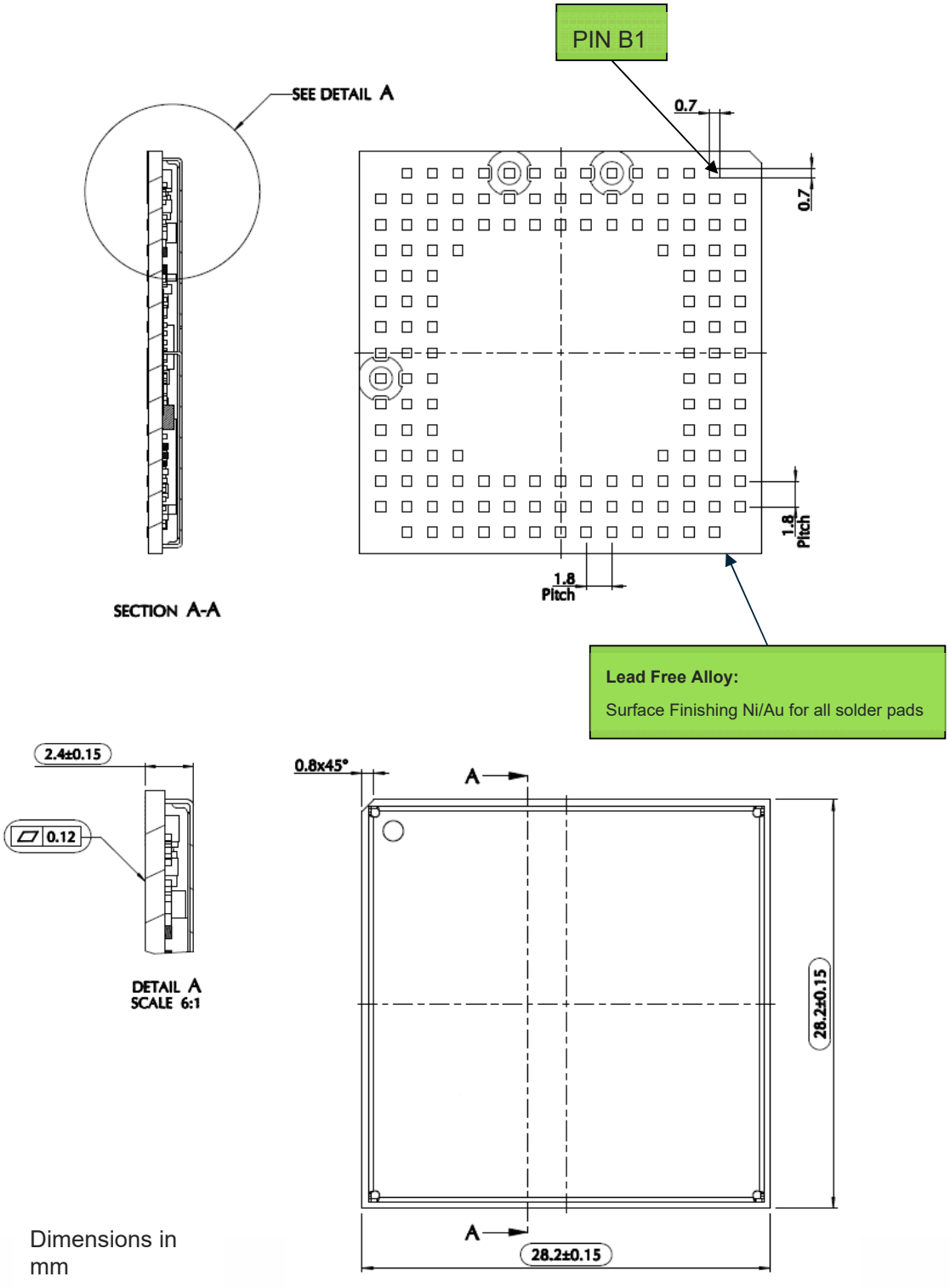

Dimensions in mm

10. APPLICATION PCB DESIGN

The ME910G1 modules have been designed in order to be compliant with a standard lead-free SMT process

10.1. Recommended footprint for the application

TOP VIEW

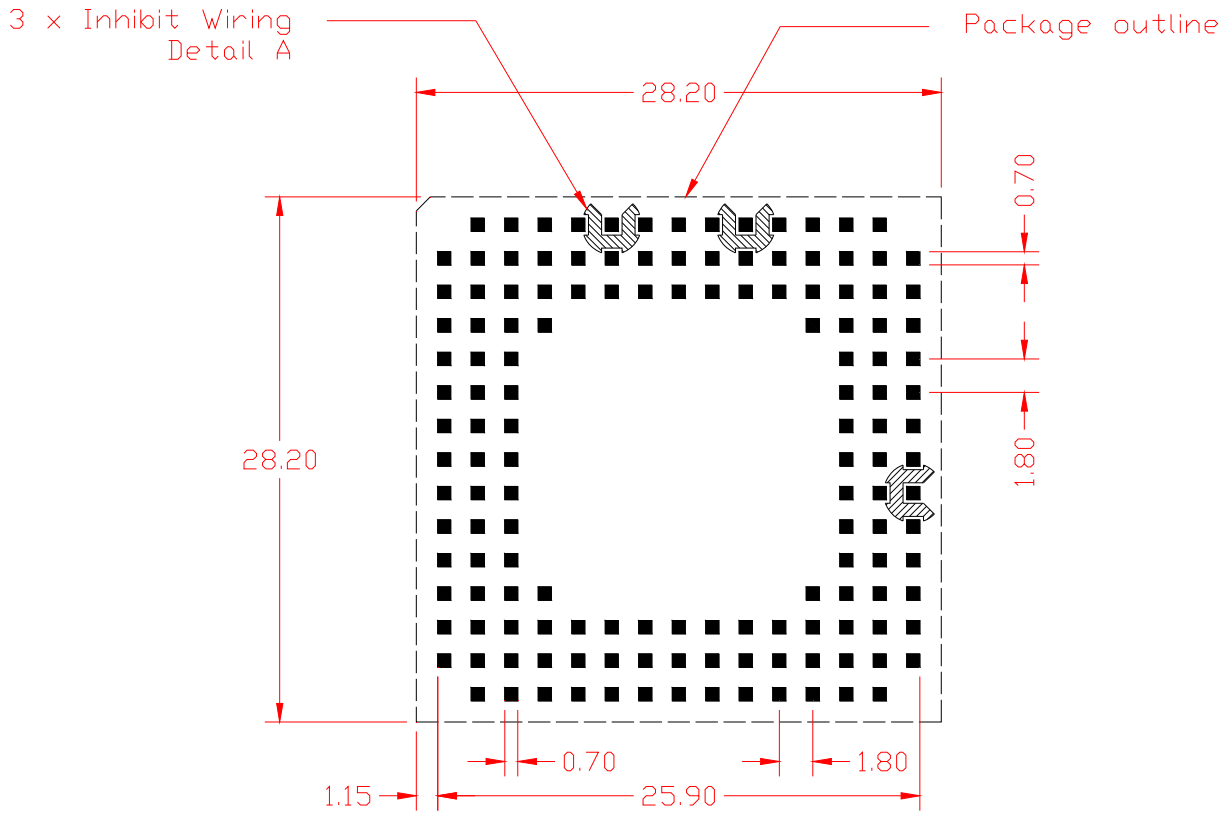

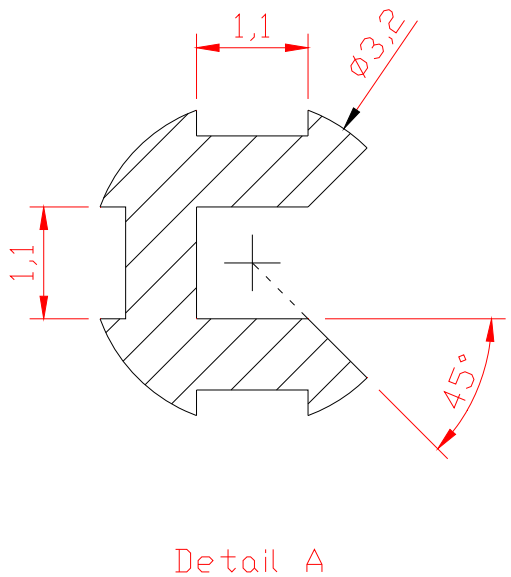

Solder resist pattern (dimensions in mm)

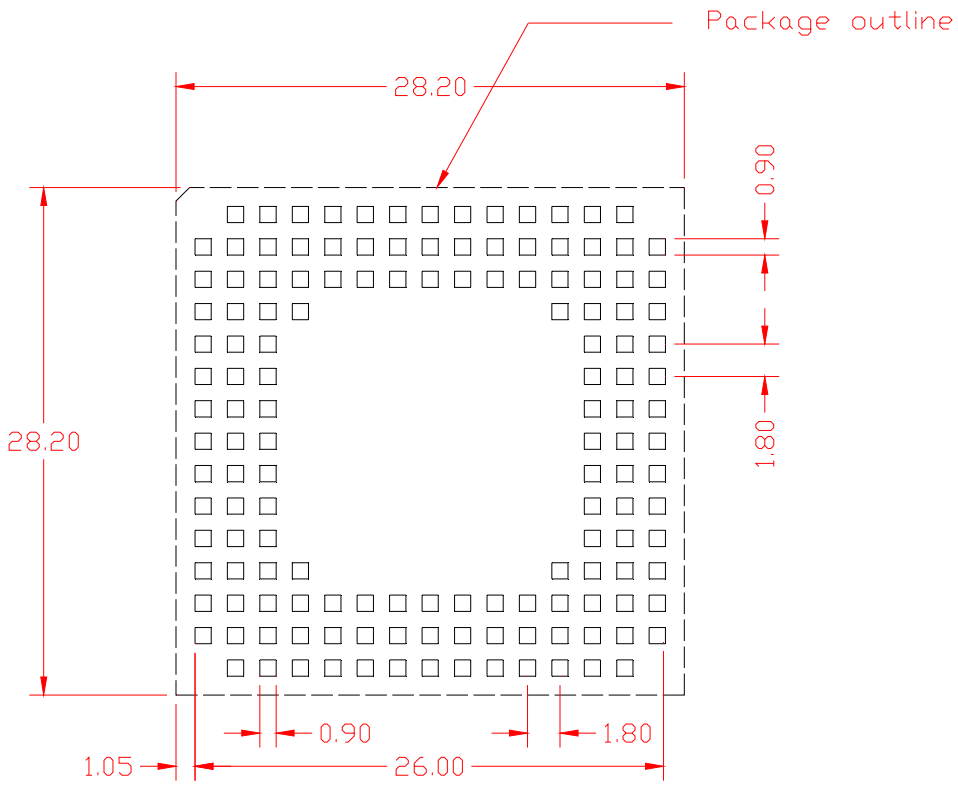

Top Transparent View

In order to easily rework the ME910G1 is suggested to consider on the application a 1.5 mm placement inhibit area around the module.
It is also suggested, as common rule for an SMT component, to avoid having a mechanical part of the application in direct contact with the module.

NOTE:
In the customer application, the region under WIRING INHIBIT (see figure above) must be clear from signal or ground paths.

10.2. PCB pad design

In PCB design, the solder pads can be defined as either Solder Mask Defined (SMD) or Non-Solder Mask Defined (NSMD). The difference between these two solder mask pad definitions, is in the closeness of the solder mask to the metal pad. In SMD pads, the solder mask opening is smaller than the metal pad and overlaps the metal on all sides. The solder mask opening defines the solderable area of the pad. In NSMD pads, the solder mask opening is larger than the metal pad and does not overlap the metal. The metal edge defines the solderable area of the pad (see Figure below).
Since the metal etching process in PCB manufacture, has significantly tighter alignment and etch tolerances than the alignment registration of the solder masking process, which, a more accurate solder pad land pattern can be obtained with NSMD pads. In addition, with SMD pads, the solder mask that overlaps the metal pad introduces additional height above the metal surface that may affect solder joint adhesion and reliability.
Non solder mask defined (NSMD) type is recommended for the solder pads on the PCB.

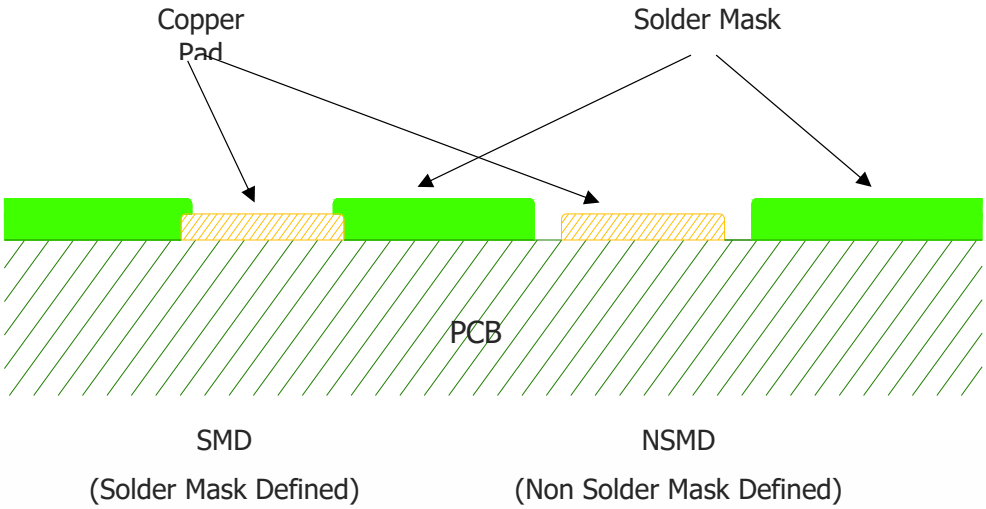

10.3. Recommendations for PCB pad dimensions

It is not recommended to place via or micro-via not covered by solder resist in an area of 0,3 mm around the pads unless it carries the same signal of the pad itself

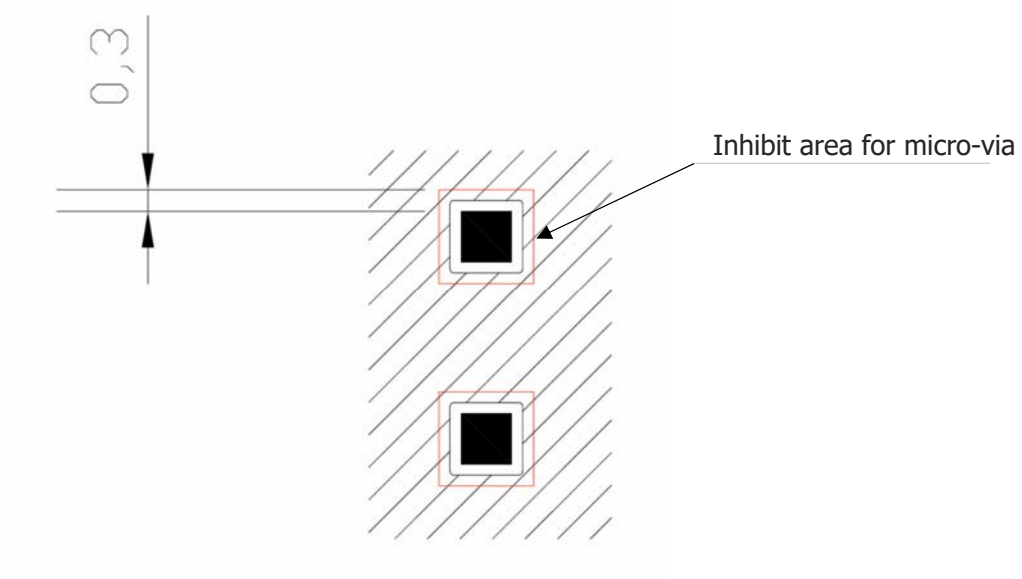

Holes in pad are allowed only for blind holes and not for through holes.

Recommendations for PCB pad surfaces:

Finish	Layer Thickness (um)	Properties
Electro-less Ni / Immersion Au	3 –7 / 0.05 – 0.15	good solder ability protection, high shear force values

The PCB must be able to resist the higher temperatures which are occurring at the lead-free process. This issue should be discussed with the PCB-supplier. Generally, the wettability of tin-lead solder paste on the described surface plating is better compared to lead-free solder paste.

It is not necessary to panel the application's PCB, however in that case it is suggested to use milled contours and predrilled board breakouts; scoring or v-cut solutions are not recommended

10.4. Thermal performance

FR4 is one of the most commonly used PCB materials, it is a flame retardant composite material, composed by fiberglass-reinforced and epoxy laminate. One of the features of the FR4, is to have a very low thermal conductivity. An inexpensive way to improve thermal transfer for FR-4 PCBs is to add thermal vias - plated through-holes (PTH) between conductive layers. Vias are created by drilling holes and copper plating them, in the same way that a PTH or via is used for electrical interconnections between layers. An array of plated through-hole thermal vias, should be located in the GND area underneath Telit module of the PCB to provide a thermal connection from the PCB GND to additional metal layers of the PCB.

The application PCB layout should include plated through-hole thermal vias for efficient heat dissipation from the Telit module into the PCB. One of the following thermal via types should be used:

- Open plated through-hole vias that will provide lower PCB fabrication costs but may fill with solder.
- Plugged and capped plated through-hole vias that will provide higher PCB fabrication costs but will not fill with solder.

Telit recommends creating areas of 10 mil (0.254-mm) vias arranged on a 25 mil (0.635-mm) rectilinear matrix. The reason for this choice is the combination of cost, performance and manufacturability. According to several PCB manufacturers, 10-mil holes and 25-mil spacing are reasonable and repeatable production choice.

A uniform metal plating thickness on the PCB will ensure reliable, high Telit module solder assembly yield.

10.5. Stencil

A silk-screen process will be required for the deposition of solder paste to the PCB, for reflow of the Telit module to the PCB. The silk-screen process requires the use of an aperture based metal stencil where solder paste is transferred through the apertures onto the solder pads of the application PCB. To minimize solder voids and ensure maximum electrical and thermal connectivity of the module to the PCB, large pads, solder volume, and solder straining must be considered in the stencil design. The design and fabrication of the stencil determines the quality of the solder paste deposition onto the PCB and the resulting solder joint after reflow. The primary stencil parameters are aperture size, thickness, and fabrication method.

The stencil should be made from stainless steel and the apertures layout can be the same of the recommended footprint (1:1). The recommended thickness shall be 127 um (5 mil). A stencil thickness of 152 µm (6 mil) can be used as well.

10.6. Solder paste

Various types and grades of solder paste can be used for surface mounting Telit modules. For leadfree applications, a Sn-Ag (SA) or Sn-Ag-Cu (SAC) solder paste can be used. Any Type 3 solder paste that is either water-soluble or no clean is acceptable.
We recommend using only “no clean” solder paste in order to avoid the cleaning of the modules after assembly.

10.7. Solder Reflow

Recommended solder reflow profile:

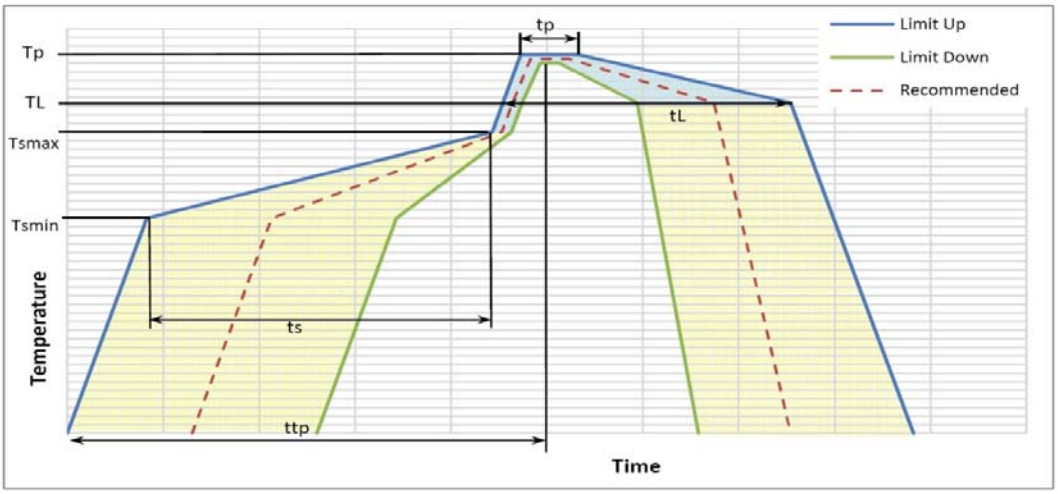

Profile Feature	Pb-Free Assembly Free
Average ramp-up rate (T_L to T_P)	3°C/second max
Preheat **– Temperature Min (Tsmin)** **– Temperature Max (Tsmax)** **– Time (min to max) (ts)**	 150°C 200°C 60-180 seconds
Tsmax to TL **– Ramp-up Rate**	 3°C/second max
Time maintained above:	

– Temperature (TL) **– Time (tL)**	217°C 60-150 seconds
Peak Temperature (Tp)	245 +0/-5°C
Time within 5°C of actual Peak Temperature (tp)	10-30 seconds
Ramp-down Rate	6°C/second max.
Time 25°C to Peak Temperature	8 minutes max.

NOTE:

All temperatures refer to topside of the package, measured on the package body surface

WARNING:

THE ME910G1 MODULE WITHSTANDS ONE REFLOW PROCESS ONLY.

WARNING:

The above solder reflow profile represents the typical SAC reflow limits and does not guarantee adequate adherence of the module to the customer application throughout the temperature range. Customer must optimize the reflow profile depending on the overall system taking into account such factors as thermal mass and warpage.

10.8. Inspection

An inspection of the solder joint between the solder pads of the Telit module and the application PCB should be performed. The best visual inspection tool for inspection of the Telit module solder joints on the PCB is a transmission X-ray, which can identify defects such as solder bridging, shorts, opens, and large voids (Note: small voids in large solder joints are not detrimental to the reliability of the solder joint).

11. PACKAGING

11.1. Tray

The ME910 modules are packaged on trays that can be used in SMT processes for pick & place handling.The first Marketing and Engineering samples of the ME910G1 series will be shipped with the current packaging of the xE910 modules (on trays of 20 pieces each). Please note that Telit is going to introduce a new packaging for the xE910 family, as per the Product Change Notification PCN-0000-14-0055, therefore the mass production units of ME910G1 will be shipped according to the following drawings:

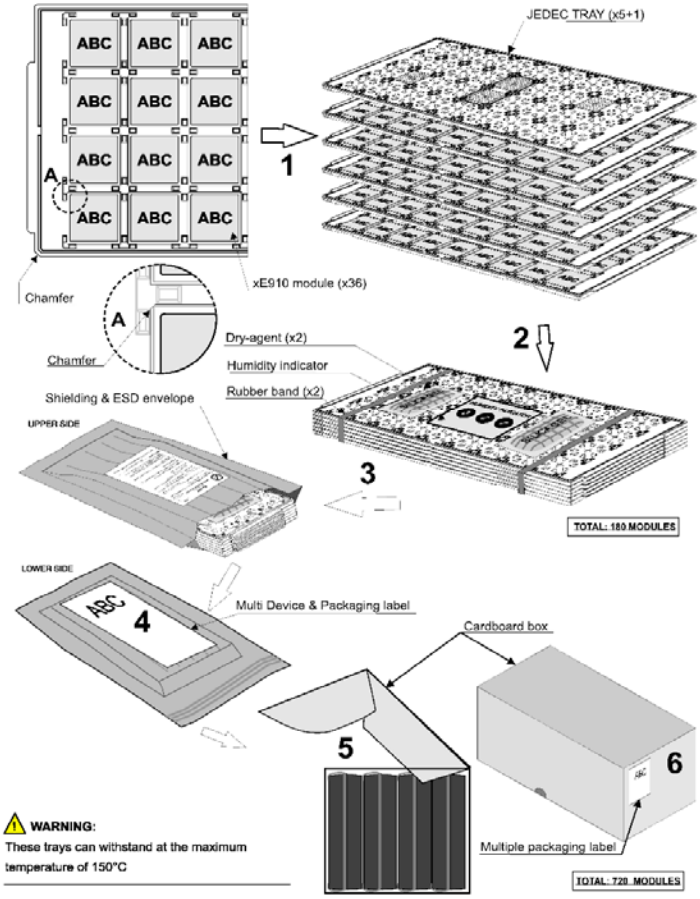

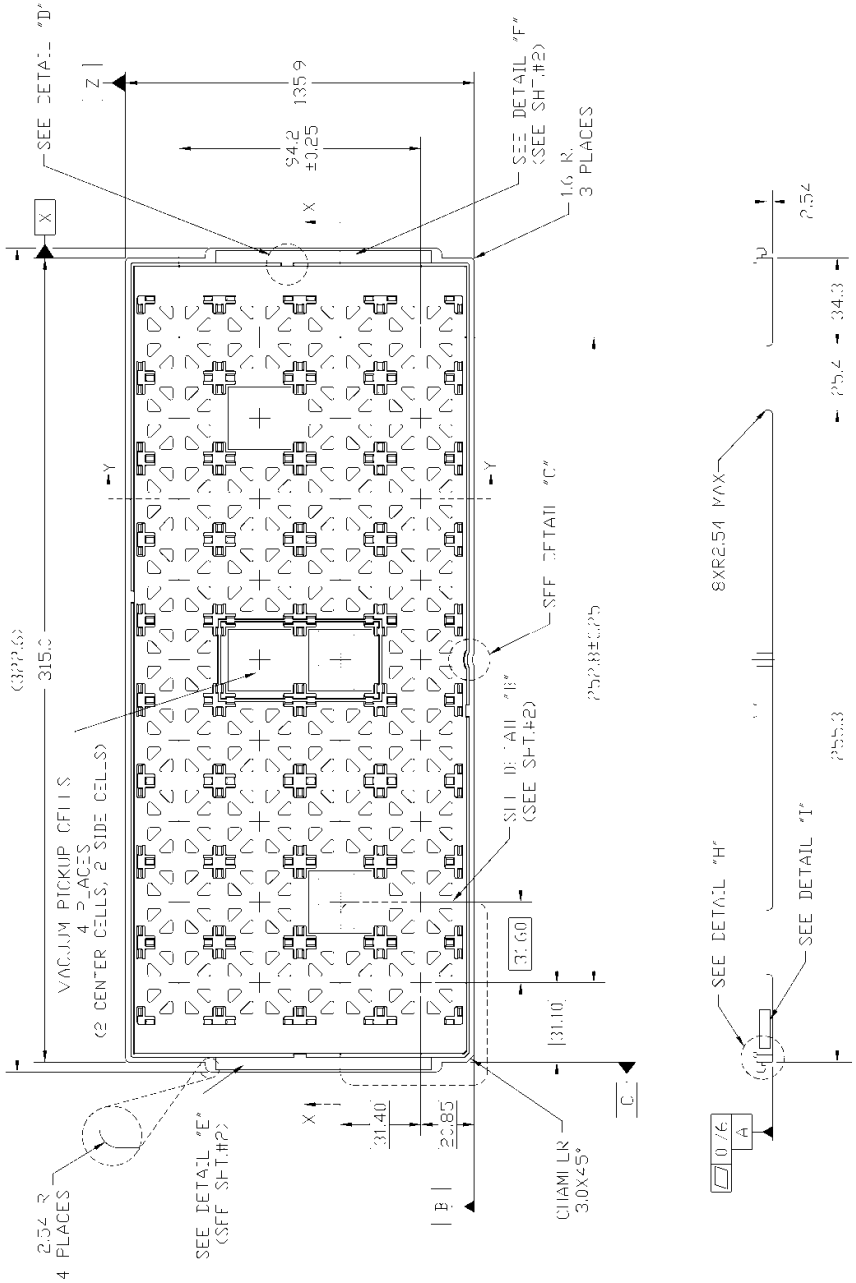
SEE DETAIL "D"
SEE DETAIL "F"
(SEE SHT.#2)
1.6 R.
3 PLACES
135.9
94.2
±0.25
315.0
VACUUM PICKUP CELLS
4 PLACES
(2 CENTER CELLS, 2 SIDE CELLS)
SEE DETAIL "C"
SEE DETAIL "B"
(SEE SHT.#2)
31.60
31.10
31.40
22.85
CHAMFER
3.0X45°
2.54 R
4 PLACES
SEE DETAIL "E"
(SEE SHT.#2)
8XR2.54 MAX
SEE DETAIL "H"
SEE DETAIL "I"
2.54
34.3
25.4
255.3

11.2. Reel

The ME910 can be packaged on reels of 200 pieces each. See figure for module positioning into the carrier.

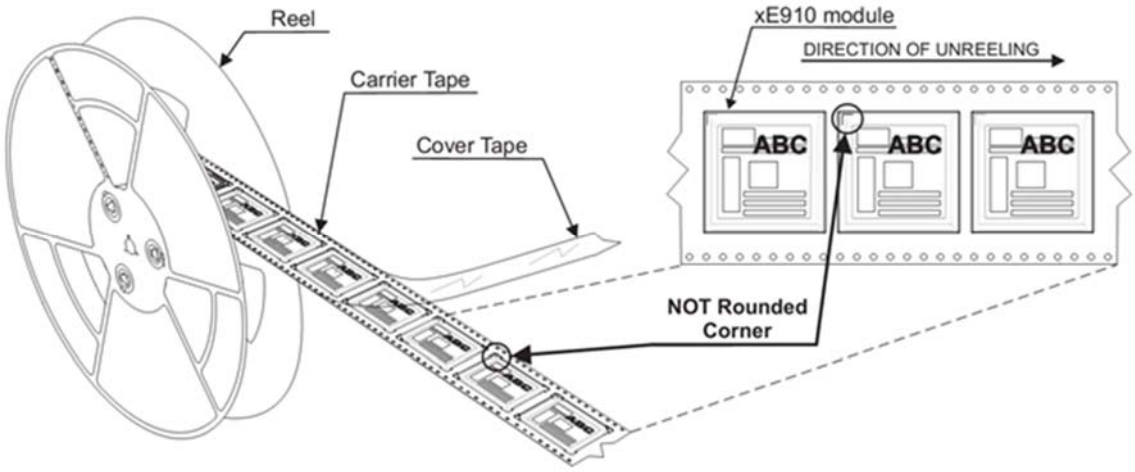

11.3. Carrier Tape detail

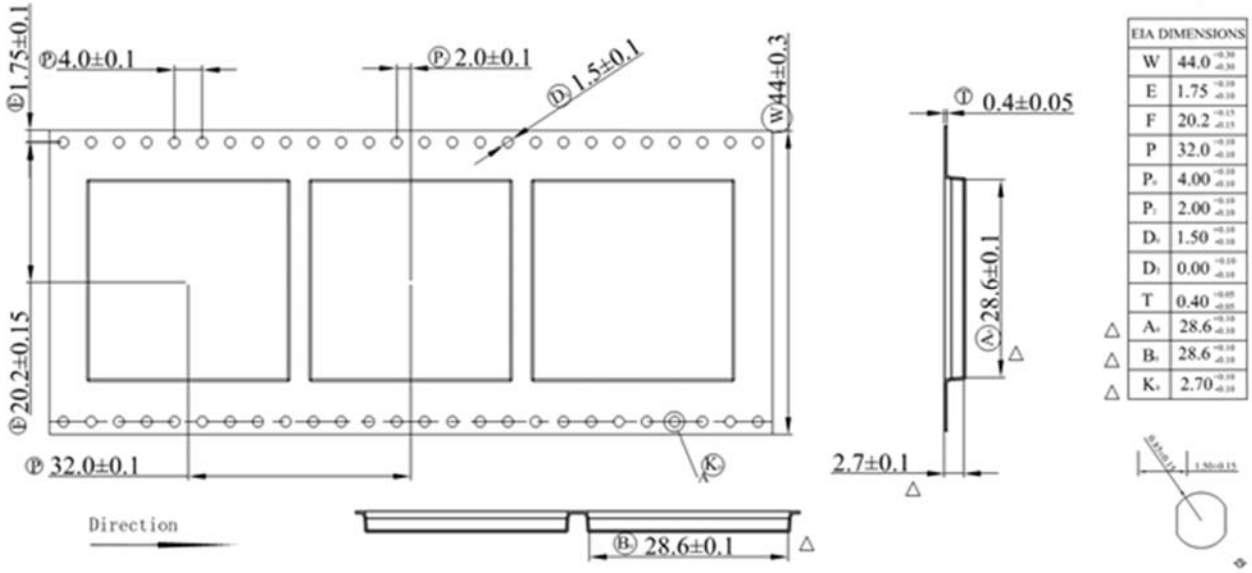

11.4. Reel detail

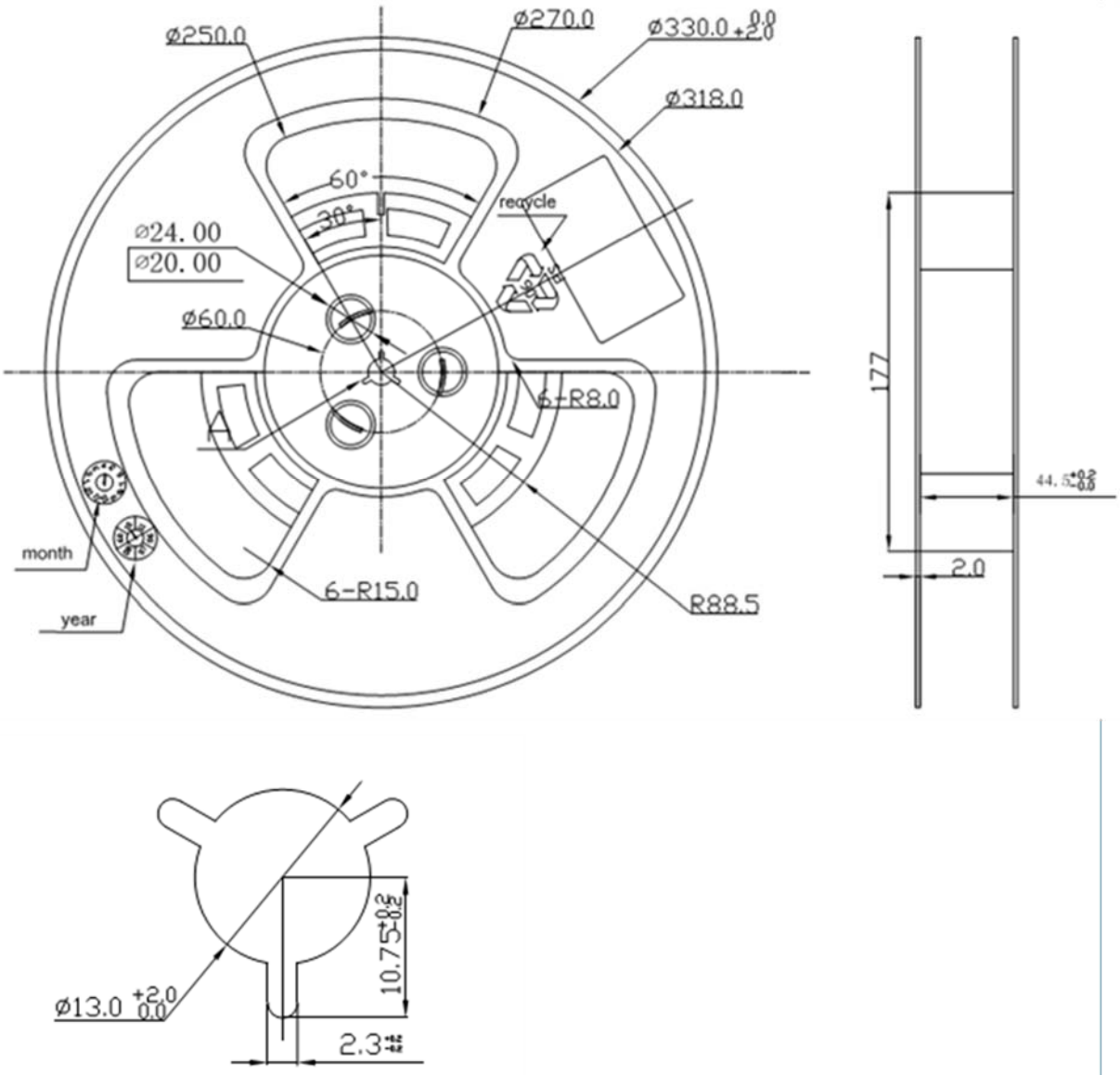

11.5. Packaging detail

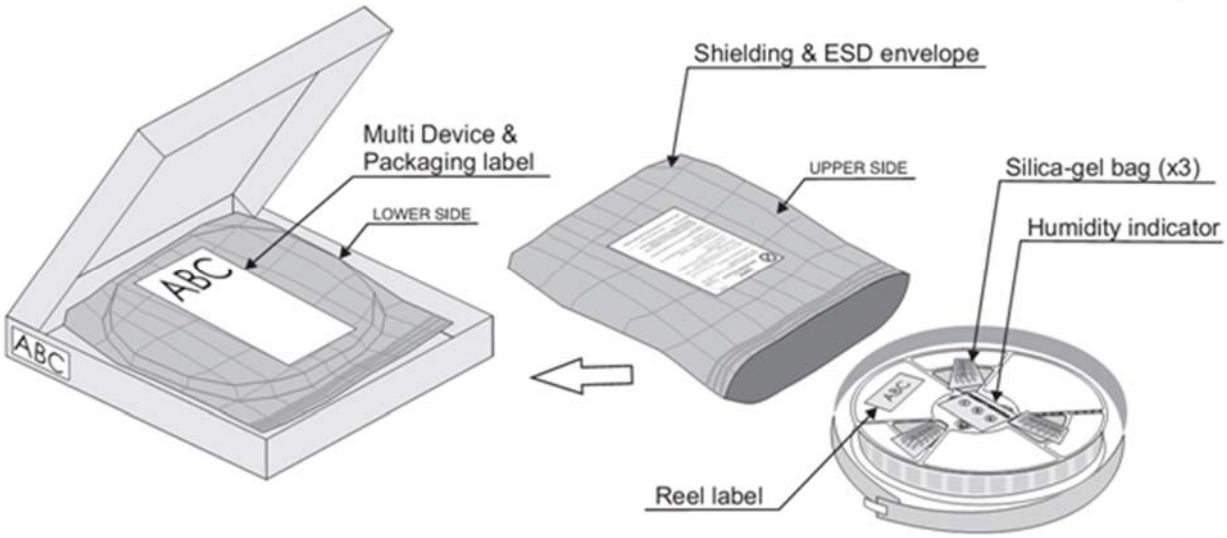

11.6. Moisture sensitivity

The ME910G1 is a Moisture Sensitive Device level 3, in according with standard IPC/JEDEC J-STD-020, take care all the relatives requirements for using this kind of components.

Moreover, the customer has to take care of the following conditions:

a) Calculated shelf life in sealed bag: 12 months at <40°C and <90% relative humidity (RH).

b) Environmental condition during the production: 30°C / 60% RH according to IPC/JEDEC J-STD-033A paragraph 5.

c) The maximum time between the opening of the sealed bag and the reflow process must be 168 hours if condition b) “IPC/JEDEC J-STD-033D paragraph 5.2” is respected

d) Baking is required if conditions b) or c) are not respected

e) Baking is required if the humidity indicator inside the bag indicates 10% RH or more

12. CONFORMITY ASSESSMENT ISSUES

12.1. Approvals

Type Approval	ME910G1-W1	ME910G1-WW	ME910G1-WWV
EU RED	Yes	Yes	Yes
US FCC	Yes	Yes	Yes
CA ISED	Yes	Yes	Yes
BRAZIL ANATEL	-	Yes	-
JAPAN JRF & JTBL	-	Yes	-
CHINA CCC	Yes	TBD	TBD

12.2. RED approval

12.2.1. RED Declaration of Conformity

Hereby, Telit Communications S.p.A declares that the ME910G1-W1, ME910G1-WW and ME910G1-WWV Modules are in compliance with Directive 2014/53/EU.

The full text of the EU declaration of conformity is available at the following internet address: http://www.telit.com\red

Text of 2014/53/EU Directive (RED) can be found here:

https://eur-lex.europa.eu/legal-content/EN/TXT/?uri=CELEX:32014L0053

12.2.2. Antennas

This radio transmitter has been approved under RED to operate with the antenna types listed below with the maximum permissible gain indicated. The usage of a different antenna in the final hosting device may need a new assessment of host conformity to RED.

Model	Antenna Type
ME910G1-W1	Omnidirectional Antenna Gain 2.14 dBi
ME910G1-WW	
ME910G1-WWV	

Max Gain for RED (dBi)			
Band	**ME910G1-W1**	**ME910G1-WW**	**ME910G1-WWV**
GSM 900	---	---	8.48
DCS 1800	---	---	14.36
GPRS/EGPRS 900	---	5.47	5.47
GPRS/EGPRS 1800	---	9.34	9.34
FDD 1	14.84	11.84	11.84
FDD 3	14.33	11.33	11.33
FDD 8	11.45	8.45	8.45
FDD 20	11.20	8.20	8.20
FDD 28	10.47	7.47	7.47

12.3. FCC and ISED approval / *FCC et ISDE approbation*

12.3.1. FCC certificates

The FCC Certificate is available here: https://www.fcc.gov/oet/ea/fccid

12.3.2. ISED Certificate / *ISDE certificates*

The ISED Certificate is available here / *Le certificat ISDE est disponible ici*:

https://sms-sgs.ic.gc.ca/equipmentSearch/searchRadioEquipments?execution=e1s1&lang=en

12.3.3. Applicable FCC and ISED rules / *Liste des règles FCC et ISDE applicables*

Model *Modèle*	**Applicable FCC Rules**	**Applicable ISED Rules** *Règles ISDE applicables*
ME910G1-W1	47 CFR Part 2, 22, 24, 27, 90	RSS: 132 Issue3, 133 Issue 6, 130 Issue 2, 139 Issue 3; RSS-Gen Issue 5
ME910G1-WW		
ME910G1-WWV		

12.3.4. FCC and ISED Regulatory notices / *Avis réglementaires de FCC et ISDE*

Modification statement / *Déclaration de modification*

Telit has not approved any changes or modifications to this device by the user. Any changes or modifications could void the user's authority to operate the equipment.

Telit n'approuve aucune modification apportée à l'appareil par l'utilisateur, quelle qu'en soit la nature. Tout changement ou modification peuvent annuler le droit d'utilisation de l'appareil par l'utilisateur.

Interference statement / *Déclaration d'interférence*

This device complies with Part 15 of the FCC Rules and Industry Canada licence-exempt RSS standard(s). Operation is subject to the following two conditions: (1) this device may not cause interference, and (2) this device must accept any interference, including interference that may cause undesired operation of the device.

Le présent appareil est conforme aux CNR d'Industrie Canada applicables aux appareils radio exempts de licence. L'exploitation est autorisée aux deux conditions suivantes : (1) l'appareil ne doit pas produire de brouillage, et (2) l'utilisateur de l'appareil doit accepter tout brouillage radioélectrique subi, même si le brouillage est susceptible d'en compromettre le fonctionnement.

Wireless notice / *Wireless avis*

This device complies with FCC/ISED radiation exposure limits set forth for an uncontrolled environment and meets the FCC radio frequency (RF) Exposure Guidelines and RSS-102 of the ISED radio frequency (RF) Exposure rules. This transmitter must not be co-located or operating in conjunction with any other antenna or transmitter. The antenna should be installed and operated with minimum distance of 20 cm between the radiator and your body.

Le présent appareil est conforme à l'exposition aux radiations FCC / ISED définies pour un environnement non contrôlé et répond aux directives d'exposition de la fréquence de la FCC radiofréquence (RF) et RSS-102 de la fréquence radio (RF) ISED règles d'exposition. L'émetteur ne doit pas être colocalisé ni fonctionner conjointement avec à autre antenne ou autre émetteur. L'antenne doit être installée de façon à garder une distance minimale de 20 centimètres entre la source de rayonnements et votre corps.

FCC Class B digital device notice (FCC only)

This equipment has been tested and found to comply with the limits for a Class B digital device, pursuant to part 15 of the FCC Rules. These limits are designed to provide reasonable protection against harmful interference in a residential installation. This equipment generates, uses and can radiate radio frequency energy and, if not installed and used in accordance with the instructions, may cause harmful interference to radio communications. However, there is no guarantee that interference will not occur in a particular installation. If this equipment does cause harmful interference to radio or television reception, which can be determined by turning the equipment off and on, the user is encouraged to try to correct the interference by one or more of the following measures:

Reorient or relocate the receiving antenna.

- Increase the separation between the equipment and receiver.
- Connect the equipment into an outlet on a circuit different from that to which the receiver is connected.
- Consult the dealer or an experienced radio/TV technician for help.

CAN ICES-3 (B) / NMB-3 (B) (ISED only) / *(ISDE seulement)*

This Class B digital apparatus complies with Canadian ICES-003.

Cet appareil numérique de classe B est conforme à la norme canadienne ICES-003.

12.3.5. Antennas / *Antennes*

FCC

This radio transmitter has been approved by FCC and ISED to operate with the antenna types listed below with the maximum permissible gain indicated. Antenna types not included in this list, having a gain greater than the maximum gain indicated for that type, are strictly prohibited for use with this device.

Model	Antenna Type
ME910G1-W1	Omnidirectional Antenna Gain 2.14 dBi
ME910G1-WW	
ME910G1-WWV	

Max Gain for FCC (dBi)			
Band	**ME910G1-W1**	**ME910G1-WW**	**ME910G1-WWV**
GSM 850	---	---	9.44
GSM 1900	---	---	11.04
GPRS/EGPRS 850	---	6.93	6.93
GPRS/EGPRS 1900	---	10.42	10.42
FDD 2	11.0	12.01	12.01
FDD 4	8.0	12.01	12.01
FDD 5	12.4	9.41	9.41
FDD 12	11.6	8.70	8.70
FDD 13	12.1	9.16	9.16
FDD 25	11.0	12.01	12.01
FDD 26	12.3	9.36	9.36
FDD 66	8.0	12.01	12.01
FDD 71	11.4	11.47	11.47
FDD 85	11.6	8.69	8.69

ISED / *ISDE*

This radio transmitter has been approved by ISED to operate with the antenna types listed below with the maximum permissible gain indicated. Antenna types not included in this list, having a gain greater than the maximum gain indicated for that type, are strictly prohibited for use with this device.

Le présent émetteur radio a été approuvé par ISDE pour fonctionner avec les types d'antenne énumérés ci-dessous et ayant un gain admissible maximal. Les types d'antenne non inclus dans cette liste, et dont le gain est supérieur au gain maximal indiqué, sont strictement interdits pour l'exploitation de l'émetteur.

Model ***Modèle***	**Antenna Type** ***Type d'Antenne***
ME910G1-W1	Omnidirectional Antenna Gain 2.14 dBi *Omnidirectionelle* *Gain de l'antenne 2.14 dBi*
ME910G1-WW	
ME910G1-WWV	

Gain maximum pour ISED (dBi) / *Gain maximum pour ISDE (dBi)*			
Bande	**ME910G1-W1**	**ME910G1-WW**	**ME910G1-WWV**
GSM 850			6.15
GSM 1900			11.04
GPRS/EGPRS 850	---	3.64	3.64
GPRS/EGPRS 1900	---	5.13	5.13
FDD 2	11.0	8.52	8.52
FDD 4	8.0	8.29	8.29
FDD 5	9.1	6.12	6.12
FDD 12	8.6	5.63	5.63
FDD 13	8.9	5.95	5.95

FDD 25	11.0	8.52	8.52
FDD 26	9.0	6.09	6.09
FDD 66	8.0	8.29	8.29
FDD 71	8.4	8.48	8.48
FDD 85	8.6	5.63	5.63

12.3.6. FCC label and compliance information

The product has a FCC ID label on the device itself. Also, the OEM host end product manufacturer will be informed to display a label referring to the enclosed module The exterior label will read as follows: “Contains Transmitter Module FCC ID: RI7ME910G1W1” or “Contains FCC ID: RI7ME910G1W1” for ME910G1-W1 and : “Contains Transmitter Module FCC ID: RI7ME910G1WW” or “Contains FCC ID: RI7ME910G1WW” for ME910G1-WW and ME910G1-WWV

Below list of all the models and related FCC ID:

Model	FCC ID
ME910G1-W1	RI7ME910G1W1
ME910G1-WW	RI7ME910G1WW
ME910G1-WWV	

12.3.7. ISED label and compliance information/ *Étiquette et informations de conformité ISDE*

The host product shall be properly labelled to identify the modules within the host product.

The ISED certification label of a module shall be clearly visible at all times when installed in the host product; otherwise, the host product must be labelled to display the ISED certification number for the module, preceded by the word "contains" or similar wording expressing the same meaning, as follows:

Contains IC: XXXXXX-YYYYYYYYYYY

In this case, XXXXXX-YYYYYYYYYYY is the module's certification number.

Le produit hôte devra être correctement étiqueté, de façon à permettre l'identification des modules qui s'y trouvent.

L'étiquette d'homologation d'un module d'ISDE devra être apposée sur le produit hôte à un endroit bien en vue, en tout temps. En l'absence d'étiquette, le produit hôte doit porter une étiquette sur laquelle figure le numéro d'homologation du module d'ISDE, précédé du mot « contient », ou d'une formulation similaire allant dans le même sens et qui va comme suit :

Contient IC : XXXXXX-YYYYYYYYYYY

Dans ce cas, XXXXXX-YYYYYYYYYYY est le numéro d'homologation du module.

Model ***Modèle***	**ISED Certification Number** ***Num. de certification ISDE***
ME910G1-W1	5131A-ME910G1W1
ME910G1-WW	5131A-ME910G1WW
ME910G1-WWV	

12.3.8. Test modes and additional testing requirements / *Sur les modes de test et les exigences de test supplémentaires*

The module has been evaluated in mobile stand-alone conditions. For different operational conditions from a stand-alone modular transmitter in a host (multiple, simultaneously transmitting modules or other transmitters in a host), additional testing may be required (collocation, retesting…)

If this module is intended for use in a portable device, you are responsible for separate approval to satisfy the SAR requirements of FCC Part 2.1093 and IC RSS-102.

Le module a été évalué dans des conditions autonomes mobiles. Pour différentes conditions de fonctionnement d'un émetteur modulaire autonome dans un hôte (plusieurs modules émettant simultanément ou d'autres émetteurs dans un hôte), des tests supplémentaires peuvent être nécessaires (colocalisation, retesting…)

Si ce module est destiné à être utilisé dans un appareil portable, vous êtes responsable de l'approbation séparée pour satisfaire aux exigences SAR de la FCC Partie 2.1093 et IC RSS-102.

12.3.9. FCC Additional testing, Part 15 Subpart B disclaimer

The modular transmitter is only FCC authorized for the specific rule parts (i.e., FCC transmitter rules) listed on the grant, and that the host product manufacturer is responsible for compliance to any other FCC rules that apply to the host not covered by the modular transmitter grant of certification. If the grantee markets their product as being Part 15 Subpart B compliant (when it also contains unintentional-radiator digital circuity), then the grantee shall provide a notice stating that the final host product still requires Part 15 Subpart B compliance testing with the modular transmitter installed. The end product with an embedded module may also need to pass the FCC Part 15 unintentional emission testing requirements and be properly authorized per FCC Part 15.

12.4. ANATEL Regulatory Notices

"Este equipamento não tem direito à proteção contra interferência prejudicial e não pode causar interferência em sistemas devidamente autorizados"

"This equipment is not entitled to protection against harmful interference and must not cause interference in duly authorized systems"

ME910G1-WW, ME310G1-WW, ML865G1-WW Homologation #: 08566-20-02618

13. SAFETY RECOMMENDATIONS

13.1. READ CAREFULLY

Be sure the use of this product is allowed in the country and in the environment required. The use of this product may be dangerous and has to be avoided in the following areas:

- Where it can interfere with other electronic devices in environments such as hospitals, airports, aircrafts, etc.
- Where there is risk of explosion such as gasoline stations, oil refineries, etc. It is the responsibility of the user to enforce the country regulation and the specific environment regulation.

Do not disassemble the product; any mark of tampering will compromise the warranty validity. We recommend following the instructions of the hardware user guides for correct wiring of the product. The product has to be supplied with a stabilized voltage source and the wiring has to be conformed to the security and fire prevention regulations. The product has to be handled with care, avoiding any contact with the pins because electrostatic discharges may damage the product itself. Same cautions have to be taken for the SIM, checking carefully the instruction for its use. Do not insert or remove the SIM when the product is in power saving mode.

The system integrator is responsible for the functioning of the final product; therefore, care has to be taken to the external components of the module, as well as any project or installation issue, because the risk of disturbing the cellular network or external devices or having impact on the security. Should there be any doubt, please refer to the technical documentation and the regulations in force. Every module has to be equipped with a proper antenna with specific characteristics. The antenna has to be installed with care in order to avoid any interference with other electronic devices and has to guarantee a minimum distance from the body (20 cm). In case this requirement cannot be satisfied, the system integrator has to assess again the final product against the regulation about exposure to electromagnetic fields.

The equipment is intended to be installed in a restricted area location.

The equipment must be supplied by an external specific limited power source in compliance with the standard EN 62368-1:2014.

The European Community provides some Directives for the electronic equipment introduced on the market. All of the relevant information is available on the European Community website:

https://ec.europa.eu/growth/sectors/electrical-engineering_en

14. ACRONYMS

TTSC	Telit Technical Support Centre
USB	Universal Serial Bus
HS	High Speed
DTE	Data Terminal Equipment
UMTS	Universal Mobile Telecommunication System
WCDMA	Wideband Code Division Multiple Access
HSDPA	High Speed Downlink Packet Access
HSUPA	High Speed Uplink Packet Access
UART	Universal Asynchronous Receiver Transmitter
HSIC	High Speed Inter Chip
SIM	Subscriber Identification Module
SPI	Serial Peripheral Interface
ADC	Analog – Digital Converter
DAC	Digital – Analog Converter
I/O	Input Output
GPIO	General Purpose Input Output
CMOS	Complementary Metal – Oxide Semiconductor
MOSI	Master Output – Slave Input
MISO	Master Input – Slave Output
CLK	Clock

CS	Chip Select
RTC	Real Time Clock
PCB	Printed Circuit Board
ESR	Equivalent Series Resistance
VSWR	Voltage Standing Wave Radio
VNA	Vector Network Analyzer

15. DOCUMENT HISTORY

Revision	Date	Changes
0	2019-04-12	• First issue
1	2019-08-29	• Bands support updating • Added ME910G1-WW • Temperature range update • Added power consumption figures • Removed B14 • Extended Voltage Range lower limit change
2	2020-01-23	• Conformity assessment update • Power consumption figures update • RX Sensitivity figures update • RF Section update • Pull-up/down values update
3	2020-06-10	• Conformity assessment update • TX Output Power update • Power Consumption section update • GNSS Section update • Applicability table update
4	2020-06-18	• The title of chapter 5.7.3.2 has been changed from "Modem serial port 2" in "Modem serial port 2 (USIF1)". • The title of chapter 5.7.3.1 has been changed from "Modem serial port 1" in "Modem serial port 1 (USIF0)". • In the table of chapter 3.1, the "Asynchronous serial port" section title has been changed in "Asynchronous serial port (USIF0)".
5	2020-07-22	• Conformity assessment update with ANATEL
6		• Conformity assessment update • TX Power update

SUPPORT INQUIRIES

Link to **www.telit.com** and contact our technical support team for any questions related to technical issues.

www.telit.com

Telit Communications S.p.A.
Via Stazione di Prosecco, 5/B
I-34010 Sgonico (Trieste), Italy

Telit Wireless Solutions Inc.
3131 RDU Center Drive, Suite 135
Morrisville, NC 27560, USA

Telit Wireless Solutions Ltd.
10 Habarzel St.
Tel Aviv 69710, Israel

Telit IoT Platforms LLC
5300 Broken Sound Blvd, Suite 150
Boca Raton, FL 33487, USA

Telit Wireless Solutions Co., Ltd.
8th Fl., Shinyoung Securities Bld.
6, Gukjegeumyung-ro8-gil, Yeongdeungpo-gu
Seoul, 150-884, Korea

Telit Wireless Solutions
Technologia e Servicos Ltda
Avenida Paulista, 1776, Room 10.C
01310-921 São Paulo, Brazil

Telit reserves all rights to this document and the information contained herein. Products, names, logos and designs described herein may in whole or in part be subject to intellectual property rights. The information contained herein is provided "as is". No warranty of any kind, either express or implied, is made in relation to the accuracy, reliability, fitness for a particular purpose or content of this document. This document may be revised by Telit at any time. For most recent documents, please visit www.telit.com

Copyright © 2016, Telit

[04.2016]

Mod. 0805 2016-08 Rev.5