xE922-3GR
Hardware User Guide

1VV0301272 Rev.0.8 - 2017-01-05

Making machines talk.

APPLICABILITY TABLE

PRODUCT
HE922-3GR
WE922-3GR

APPLICABILITY TABLE 1

Reproduction forbidden without written authorization from Telit Communications S.p.A. - All Rights Reserved.

SPECIFICATIONS SUBJECT TO CHANGE WITHOUT NOTICE

Notice

While reasonable efforts have been made to assure the accuracy of this document, Telit assumes no liability resulting from any inaccuracies or omissions in this document, or from use of the information obtained herein. The information in this document has been carefully checked and is believed to be entirely reliable. However, no responsibility is assumed for inaccuracies or omissions. Telit reserves the right to make changes to any products described herein and reserves the right to revise this document and to make changes from time to time in content hereof with no obligation to notify any person of revisions or changes. Telit does not assume any liability arising out of the application or use of any product, software, or circuit described herein; neither does it convey license under its patent rights or the rights of others.

It is possible that this publication may contain references to, or information about Telit products (machines and programs), programming, or services that are not announced in your country. Such references or information must not be construed to mean that Telit intends to announce such Telit products, programming, or services in your country.

Copyrights

This instruction manual and the Telit products described in this instruction manual may be, include or describe copyrighted Telit material, such as computer programs stored in semiconductor memories or other media. Laws in the Italy and other countries preserve for Telit and its licensors certain exclusive rights for copyrighted material, including the exclusive right to copy, reproduce in any form, distribute and make derivative works of the copyrighted material. Accordingly, any copyrighted material of Telit and its licensors contained herein or in the Telit products described in this instruction manual may not be copied, reproduced, distributed, merged or modified in any manner without the express written permission of Telit. Furthermore, the purchase of Telit products shall not be deemed to grant either directly or by implication, estoppel, or otherwise, any license under the copyrights, patents or patent applications of Telit, as arises by operation of law in the sale of a product.

Computer Software Copyrights

The Telit and 3rd Party supplied Software (SW) products described in this instruction manual may include copyrighted Telit and other 3rd Party supplied computer programs stored in semiconductor memories or other media. Laws in the Italy and other countries preserve for Telit and other 3rd Party supplied SW certain exclusive rights for copyrighted computer programs, including the exclusive right to copy or reproduce in any form the copyrighted computer program. Accordingly, any copyrighted Telit or other 3rd Party supplied SW computer programs contained in the Telit products described in this instruction manual may not be copied (reverse engineered) or reproduced in any manner without the express written permission of Telit or the 3rd Party SW supplier. Furthermore, the purchase of Telit products shall not be deemed to grant either directly or by implication, estoppel, or otherwise, any license under the copyrights, patents or patent applications of Telit or other 3rd Party supplied SW, except for the normal non-exclusive, royalty free license to use that arises by operation of law in the sale of a product.

Reproduction forbidden without written authorization from Telit Communications S.p.A. - All Rights Reserved.

Usage and Disclosure Restrictions

License Agreements

The software described in this document is the property of Telit and its licensors. It is furnished by express license agreement only and may be used only in accordance with the terms of such an agreement.

Copyrighted Materials

Software and documentation are copyrighted materials. Making unauthorized copies is prohibited by law. No part of the software or documentation may be reproduced, transmitted, transcribed, stored in a retrieval system, or translated into any language or computer language, in any form or by any means, without prior written permission of Telit

High Risk Materials

Components, units, or third-party products used in the product described herein are NOT fault-tolerant and are NOT designed, manufactured, or intended for use as on-line control equipment in the following hazardous environments requiring fail-safe controls: the operation of Nuclear Facilities, Aircraft Navigation or Aircraft Communication Systems, Air Traffic Control, Life Support, or Weapons Systems (“High Risk Activities"). Telit and its supplier(s) specifically disclaim any expressed or implied warranty of fitness for such High Risk Activities.

Trademarks

TELIT and the Stylized T Logo are registered in Trademark Office. All other product or service names are the property of their respective owners.

Copyright © Telit Communications S.p.A. 2016.

Reproduction forbidden without written authorization from Telit Communications S.p.A. - All Rights Reserved.

Contents

1. Introduction 9
1.1. Scope 9
1.2. Audience 9
1.3. Contact Information, Support 10
1.4. Text Conventions 10
1.5. Supporting documents 11
1.6. Product Variants 11
1.7. Abbreviations 11
2. General Product Description 13
2.1. Overview 13
2.2. General Functionality and Main Features 15
2.3. Reference table of RF bands characteristics 19
2.3.1. Cellular network: 19
2.3.2. WiFi/Bluetooth 20
2.3.3. GNSS 20
2.4. Applications 20
2.5. Sensitivity 21
2.6. High level block Diagram 22
2.7. Environmental requirements 23
2.7.1. Temperature range 23
2.8. xE922-3GR Mechanical Specifications 24
2.8.1. Dimensions 24
2.8.2. Weight 24
2.8.3. RoHS compliance 24
3. xE922-3GR Module pin out 25
3.1. PIN table 25
3.2. LGA Pads Layout 37
4. Electrical specifications 39
4.1. Absolute maximum ratings – not operational 39

Reproduction forbidden without written authorization from Telit Communications S.p.A. - All Rights Reserved.

4.2. Recommended operating conditions 39
4.3. Logic Level Specifications 39

5. Power supply 41
5.1. Input supply 41
5.2. Output supply 42
5.2.1. Linear voltage regulators 42
5.2.1.1. VAUX_1P8V 42
5.2.1.2. VAUX_2P85V 43
5.2.1.3. VAUX_3P0V 43
5.2.1.4. VSIM1/2 44
5.2.2. DC/DC stepdown 44
5.2.2.1. 1V8_OUT 44
5.3. Typical system power consumption 45
5.4. RTC backup 47

6. Power ON/OFF and reset control 49
6.1. Power On 49
6.1.1. ON_OFF key action 49
6.1.2. Switching ON due to charging 50
6.1.3. Switching on due to RTC alarm 50
6.2. Power off 50
6.2.1. Soft power off 50
6.2.2. Emergency power off 50
6.3. Reset 50

7. Battery management 51
7.1. Coulomb counter 51
7.2. Battery charging 52
7.2.1. Block diagram 52
7.2.2. Battery/charger-less operation 54

8. USIM interface 55

9. USB port 57

10. Display interface 60
10.1. MIPI-DSI 60

Reproduction forbidden without written authorization from Telit Communications S.p.A. - All Rights Reserved.

10.2. LVDS 62
10.3. Backlight control 64
10.4. LED_CURSINK 65
10.5. Touch panel 66

11. Camera interface 67

12. Peripheral interfaces 71
12.1. I2C 71
12.2. USIF 72
12.3. SDMMC/SDIO 74
12.4. ADC 77

13. General purpose I/O 78

14. Debug / flash interfaces 81
14.1. USB2.0 HS 81
14.2. USIF2 81
14.3. JTAG 81
14.4. Test pads 81

15. Audio 82
15.1. Analog 82
15.1.1. Analog IN 83
15.1.2. Analog OUT 86
15.1.2.1. Earpiece 87
15.1.2.2. Headset 87
15.1.2.3. Loudspeaker 88
15.2. Digital 90
15.2.1. I2S 90
15.2.2. Digital microphone 90

16. Antenna(s) 91
16.1. **GSM/WCDMA Antenna Requirements** 91
16.1.1. GSM/WCDMA Antenna – PCB line Guidelines 92
16.1.2. GSM/WCDMA Antenna – Installation Guidelines 92

Reproduction forbidden without written authorization from Telit Communications S.p.A. - All Rights Reserved.

16.2. WiFi/BT Antenna Requirements 93
16.3. **GNSS Antenna Requirements** 93
16.3.1. Combined GNSS Antenna 94
16.3.2. Linear and Patch GNSS Antenna 94
16.3.3. Front End Design Considerations 94
16.3.4. GNSS Antenna - PCB Line Guidelines 95
16.3.5. GNSS Antenna – Installation Guidelines 95

17. Mounting the module on your board **96**
17.1. General 96
17.2. Finishing & Dimensions 96
17.3. Recommended foot print for the application main board 97
17.4. Stencil 98
17.5. PCB Pad Design 98
17.6. Recommendations for PCB Pad Dimensions (mm) 99
17.7. Solder Paste 100
17.7.1. Solder Reflow 100

18. Packing system **102**
18.1. Tray Drawing 104
18.2. Moisture Sensitivity 105

19. Safety Recommendations **106**

20. Conformity assessment issues **107**
20.1. FCC/IC Regulatory notices 107
20.1.1. Modification statement 107
20.1.2. Interference statement 107
20.1.3. RF exposure 107
20.1.4. FCC Class B digital device notice 108
20.1.5. Labelling Requirements for the Host device 108
20.2. 1999/5/EC Directive 109

21. Document History **112**

Reproduction forbidden without written authorization from Telit Communications S.p.A. - All Rights Reserved.

1. Introduction

1.1. Scope

The aim of this document is to introduce Telit xE922-3GR modules as well as present possible and recommended hardware solutions useful for developing a product based on the xE922-3GR modules. All the features and solutions detailed are applicable to all xE922-3GR, where "xE922-3GR" refers to the modules listed in the applicability table.

If a specific feature is applicable to a specific product, it will be clearly highlighted.

NOTICE:

The description text "xE922-3GR" refers to all modules listed in the APPLICABILITY TABLE 1.

In this document all the basic functions of a wireless module will be taken into account; for each one of them a valid hardware solution will be suggested and usually incorrect solutions and common errors to be avoided will be highlighted. Obviously this document cannot embrace every hardware solution or every product that may be designed. Obviously avoiding invalid solutions must be considered as mandatory. Whereas the suggested hardware configurations need not be considered mandatory, the information given should be used as a guide and a starting point for properly developing your product with the Telit xE922-3GR module.

NOTICE:

The integration of the GSM/GPRS/EGPRS/WCDMA/HSPA+/WiFi/BT/GNSS xE922-3GR cellular module within user application must be done according to the design rules described in this manual.

The information presented in this document is believed to be accurate and reliable. However, no responsibility is assumed by Telit Communication S.p.A. for its use, such as any infringement of patents or other rights of third parties which may result from its use. No license is granted by implication or otherwise under any patent rights of Telit Communication S.p.A. other than for circuitry embodied in Telit products. This document is subject to change without notice.

1.2. Audience

This document is intended for Telit customers, especially system integrators, about to implement their applications using the Telit xE922-3GR module.

Reproduction forbidden without written authorization from Telit Communications S.p.A. - All Rights Reserved.

1.3. Contact Information, Support

For general contact, technical support, to report documentation errors and to order manuals, contact Telit's Technical Support Center (TTSC) at:

TS-NORTHAMERICA@telit.com if located in North America

For other regions, Collabnet Telit web portal can be used at https://teamforge.telit.com (account can be asked at support.collabnet@telit.com

Alternatively, use:

http://www.telit.com/en/products/technical-support-center/contact.php

For detailed information about where you can buy the Telit modules or for recommendations on accessories and components visit:

http://www.telit.com

To register for product news and announcements or for product questions contact Telit's Technical Support Center (TTSC).

Our aim is to make this guide as helpful as possible. Keep us informed of your comments and suggestions for improvements.

Telit appreciates feedback from the users about the information provided.

1.4. Text Conventions

Danger – This information MUST be followed or catastrophic equipment failure or bodily injury may occur.

Caution or Warning – Alerts the user to important points about integrating the module, if these points are not followed, the module and end user equipment may fail or malfunction.

Tip or Information – Provides advice and suggestions that may be useful when integrating the module.

All dates are in ISO 8601 format, i.e. YYYY-MM-DD.

Reproduction forbidden without written authorization from Telit Communications S.p.A. - All Rights Reserved.

1.5. Supporting documents

- 1VV0301249_EVB USER GUIDE.pdf
- 1VV0301285_IFBD HW User Guide xE922-3GR.pdf
- 1VV0301324_MMI_EXT_CARD_xE922_3GR_HW USER GUIDE
- 80504NT11473A Thermal Guidelines.pdf

For further detailed information, HW/SW user manuals and application notes related to the INTEL chipset applied for this RF module, please consult Intel Business Link Support (IBL): https://businessportal.intel.com

1.6. Product Variants

xE922-3GR is available in the following hardware variants:

Type Number	Description
HE922-3GR	GSM/GPRS/EGPRS/WCDMA/HSPA+/WiFi/BT/GNSS
WE922-3GR	WiFi/BT/GNSS

1.7. Abbreviations

Term	Definition
ABB	Analog baseband
ADC	Analog-to-digital converter
AE	Application-Enabled
AES-NI	Advanced Encryption Standard New Instructions
AFE	Audio FrontEnd
CABC	Content Adaptive Backlight Control
CDP (USB)	Charging downstream port
CEU	Configurable Encryption Unit
CSI	Camera serial interface
DAC	Digital-to-analog converter
DBB	Digital baseband
DCP (USB)	Dedicated charging port
DBP	dead battery provision
DSI	Display serial interface
DSDS	Dual Sim Dual Standby
EOC	End of charge
EDID	Extended display identification data
FDD	Frequency division duplex

Reproduction forbidden without written authorization from Telit Communications S.p.A. - All Rights Reserved.

GLONASS	Global orbiting navigation satellite system
GNSS	Global navigation satellite system
GPIO	General-purpose input/output
GPRS	General packet radio services
GPS	Global positioning system
GSM	Global system for mobile communications
HMI	Human machine interface
I2C	Inter-integrated circuit
ISP	Image Signal Processor
IDI	Inter die interface
LE	Low Energy
LVDS	Low Voltage Differential Signaling
MIPI	Mobile Industry Processor Interface
MS	Microstrip line
PMU	Power management unit
SD	Secure digital
SDP (USB)	Standard downstream port
SL	Strip line
SIM	Subscriber identity module
SOC	System-On-Chip
SOC	State of charge
SMEP	Supervisor Mode Execution Privilege
SPI	Serial peripheral interface
TE	Tearing effect
UART	Universal asynchronous receiver transmitter
UMTS	Universal mobile telecommunications system
USB	Universal serial bus
USIF	Universal serial interface
VMM	Virtual machine manager
VT-x	Intel Virtual Technology
WCDMA	Wideband code division multiple access

Reproduction forbidden without written authorization from Telit Communications S.p.A. - All Rights Reserved.

2. General Product Description

2.1. Overview

Telit's module family xE922-3GR is based on Intel's **IoTG Atom x3** Quad Core processor dual chip platform.

DBB : SoC Atom x3

- CPU: Quad Core (Silvermont) 1.16 GHz
  L1$ I/D 16KB/16KB ; L2$ 1MB
  8-ch main application DMA / 4-ch secure DMA
  Android 32bit, Linux Yocto 32bit
- GPU: GFX core modified Mali-450 MP4 600 MHz $128KB
- DSP : 2x TeakLite @277MHz
- Media Encode/Decode Engine: modified VeriSilicon Media Engine (dec G1/enc H1)
  Video encoding:
  • H.264 BP@level4.0, MP@level4.0, HP@level4.0
  • Bit rate supported is from 10Kbps to 20Mbps
  • JPEG Baseline
  Video decoding:
  • MPEG-1 Main Profile up to High Level
  • MPEG-2 Main Profile up to High Level
  • MPEG-4 Simple Profile up to Level 6, Advanced Profile up to Level 5
  • H.264 up to HP Level 5.1, up to 1080p 30fps (yocto) /720p 50fps (android)
  • HEVC Main Profile up to Level 4.1 High Tier, up to 1080p 30fps (yocto) /720p 50fps (android)
  • VP6/VP8
  • JPEG Baseline interleaved
- Security building blocks

ABB: AGOLD 620

- 2G/3G RF transceiver
- WLAN
- Bluetooth

Reproduction forbidden without written authorization from Telit Communications S.p.A. - All Rights Reserved.

- GNSS
- Audio
- Analog measurement
- Power management

The module incorporates the following key technologies:

- 2G/3G cellular subsystem
- GNSS subsystem
- WiFi and Bluetooth subsystems
- Display subsystem
- Camera subsystem
- Audio subsystem
- Power management

xE922-3GR is designed for commercial (0C to70C) & industrial (extended temperature -40C to +85C) markets quality needs.

In its most basic use case, xE922-3GR can be applied as a wireless communication front-end for M2M products, offering GNSS and mobile communication features to an external host CPU through its rich interfaces.

The module supports data only communication, voice call is not supported.

xE922-3GR can further support customer software applications and security features. xE922-3GR provides software application environment with sufficient system resources for creating rich on board applications. Thanks to a dedicated application processor and embedded security resources, product developers and manufacturers can create products which guarantee fraud prevention and tamper evidence without extra effort for additional security precautions.

xE922-3GR can be self-sufficient and serve as a fully integrated IoT solution. In such a case, customer would simply complement the module with a power supply, speaker amplifier, microphone, antennae and an HMI (if applicable).

xE922-3GR is offered with different variants per the list in Section 1.6:

- HE922-3GR: Cellular/WiFi/BT/GNSS
- WE922-3GR: WiFi/BT/GNSS

Reproduction forbidden without written authorization from Telit Communications S.p.A. - All Rights Reserved.

2.2. General Functionality and Main Features

The xE922-3GR family of IoT modules features 2G/3G modem, GNSS and WiFi/BT connectivity together with an on-chip powerful application processor and a rich set of interfaces.

This overview sums all key interfaces offered by the module , consult the documentation on INTEL's IBL supporting website for actual implementation state.

A) Modem subsystem for data only communication (**H**E922-3GR variant only)

- 2G technology 3GPP TS 45.005
  - GSM/GPRS/EDGE (multislot class 10)

    note : only EDGE RX mode supported
  - Quad band support (GSM850/E-GSM900/DCS1800/PCS1900)
- 3G technology 3GPP TS 25.101 rel 7
  - WCDMA (HSDPA 21Mbps cat14 / HSUPA 5.76Mbps cat6)
  - Quad band support (band 1 / 2 / 5 / 8)
  - Class3 power class
- Two (U)SIM ports – dual voltage 1.8/3V

  ISO 7816-3 IC card standard

B) GNSS subsystem

- GPS/GLONASS receiver
- Assisted GNSS
- SBAS: WAAS, EGNOS

C) WiFi/Bluetooth subsystem

- WiFi 802.11 b/g/n 1x1 (1-14, max channel width 20MHz)
- BT 4.0 & BLE
- Single antenna shared for WiFi and BT
- Up to 72.2Mbps OTA throughput, 50Mbps actual throughput

D) Audio subsystem

- Embedded analog codec
  - 2x microphone inputs + bias supply
  - 1x stereo headset output

Reproduction forbidden without written authorization from Telit Communications S.p.A. - All Rights Reserved.

- 1x mono earpiece output
- 1x mono speaker (classD 700mW/3.8V/8 ohm)

- Dual digital microphone
- I2S digital audio IO (pinning multiplexed with USIF1 port)

E) Display subsystem

Up to 1080p, 24-bit color, 1080p 30fps (yocto) /720p 50fps (android)

- MIPI-DSI (one x4 lanes port, tearing effect timing control)
- LVDS (one x4 lanes port)
- 4 display layer
- Support color space conversion :YUV2RGB and RGB2YUV
- Support replication and dithering
- 2D Graphic Engine
- Backlight control (CABC input, BL feedback input, BL drive output)
- I2C port for touch panel control IC

F) Camera subsystem

Up to 13Mpix, 15 fps (ISP throughput up to 221 Mpix/sec) (8Mpix, 25fps)

- 4 lanes MIPI-CSI for primary camera (up to 13Mpix/1080p)
- One lane MIPI-CSI for secondary camera (up to 5Mpix/720p)
- 1 camera at a time
- GPIO's for camera control
- I2C port for camera subsystem control
- Camera auxiliary supply output

G) Power management

- External battery charger IC support
  - I2C port dedicated to external charger IC control
  - Dedicated GPIO's
  - Fuel gauge input, VBAT/DC sourcing sense ADC input
- Ability to supply the module from DC source without external battery charger IC implementation
- Rich set of embedded power management functions are in place to permit minimization of the powerconsumption of the system in all operating modes.

Reproduction forbidden without written authorization from Telit Communications S.p.A. - All Rights Reserved.

- Reduction of switching power consumption by clock gating.
- Reduction of leakage power by switching off non active logic.
- Dynamic Frequency Voltage Scaling reducing the supply voltage depending on the perfomance requirements of the system

- The following system operating modes are defined :
  - OFF : complete system switched off (all context lost)
  - WORKING : CPU executing scheduled tasks
  - IDLE : CPU in power state HALT , waiting for interrupt
  - DEEP SLEEP: CPU in power state DORMANT

H) Application processor

The Intel virtual machine manager (VMM) shares CPU resources of the quad core Atom between the cellular DBB modem high level protocol implementation, the applied OS and customer applications. Available BSP's are 32bit Android and 32bit Linux (Yocto project).

The chipset external memory interface controller EMIC supports

- Low power LPDDR3 upto 2Gbyte

  clock frequency up to 533MHz (data speed 1066 Mbps/pin)
- embedded MMC card interface eMMC4.51

  clock frequency up to 52MHz (data speed DDR 102 Mbps/pin)

  (dataspeed DDR transfer)

Module embedded memory size implementation :

- FLASH eMMC: 8 Gbyte (x8 pin, data speed up to 833 Mbps)
- RAM LPDDR3: 1 Gbyte (x32 pin, data speed up to 34112 Mbps)

I) Security capabilities of DBB:

Intergrated Trusted Executon Environment (TEE) based on Secure Virtual Machine and HW Crypto Unit (CEU)

- Atom Quad Core:

  VT-x2 / AES-NI / SMEP (Supervisor Mode Execution Privilege)
- Extensible Secure Execution Environment:

  HW crypto accelerator – CEU / 256K SRAM
- Configurable execution unit (CEU):
  - DES/3DES
  - AES(128,192,256)

Reproduction forbidden without written authorization from Telit Communications S.p.A. - All Rights Reserved.

- Exponentiation accelerator – supports RSA(1024.2048)
- Hashing engines : MD5, HMAC, SHA1/256
- True-RNG

- Secure memory : isolated memory region IMR for secure VM
- Secure boot : root of trust is SEC ROM
- Content protection : Widevine Level 1 DRM (HW protected Video Path)

J) Rich set of module I/O interfaces, including:

- SDIO: SD 3.0, 1x 4bit, speed up to DDR50

  only 1.8V supported

- SDMMC: 1x 4bit, default mode (26MHz)

  including power supply (fixed 2.9V) and card detect

- USB2.0 (FS/HS DRD dual role device)

  The USB port is typically used for:

  - Flashing of firmware and module configuration
  - Production testing
  - Accessing the Application Processor's filesystem
  - AT command access
  - High speed WWAN access to external host
  - Diagnostic monitoring and debugging
  - Communication between Java application environment and an external host CPU
  - NMEA data to an external host CPU
  - Connect to USB peripherals or hubs (note: application note available from chipset provider on USB hub connectivity)

- Peripheral Ports

  These can be applied to support several sensors like : accelerometer , gyroscope, magnetometer, proximity and ambient light sensors

  Please consult Intel's IBL Support website for AVL (approved vendor list), as well for recommended implemenation and port assignment

- 3x I2C port full speed:

Reproduction forbidden without written authorization from Telit Communications S.p.A. - All Rights Reserved.

- I2C_AUX : auxiliary use
- I2C_CAM / I2C_TP : available when not applied for camera and/or touchpad control

- USIF1 port: configurable as SPI or UART (up to 48MHz) (multiplexed with I2S)
- USIF2 port: configurable as SPI or UART (up to 26MHz)
- 26 general purpose GPIOs with at least 8 interrupts (more can be available depending on final product configuration)
- Analog audio I/F
- Antenna RF ports (GNSS, CELLULAR,WIFI/BT)

K) Form factor (40x34mm), 441 pin LGA

L) Single supply module. The module generates all its internal supply voltages.

M) Built-in RTC / backup supply pin for supercap

N) Two Operating temperature range specified for the xE922-3GR family:

- Commercial: 0 °C to +70 °C
- Industrial extended temperature: -40 °C to +85 °C

O) Cellular transmitter can work simultaneously with the transmitter in the 2.4GHz band. Only one of the 2.4 GHz modes works at a given moment and it can work simultaneously with any of the cellular modes.

2.3. Reference table of RF bands characteristics

2.3.1. Cellular network:

Mode	Freq. TX (MHz)	Freq. RX (MHz)	Channels	TX - RX offset
PCS 1900	1850.2 ~ 1909.8	1930.2 ~ 1989.8	512 ~ 810	80MHz
DCS 1800	1710 ~ 1785	1805 ~ 1880	512 ~ 885	95MHz

Reproduction forbidden without written authorization from Telit Communications S.p.A. - All Rights Reserved.

Mode	Freq. TX (MHz)	Freq. RX (MHz)	Channels	TX - RX offset
GSM 850	824.2 ~ 848.8	869.2 ~ 893.8	128 ~ 251	45MHz
EGSM 900	890 ~ 915	935 ~ 960	0 ~ 124	45 MHz
	880 ~ 890	925 ~ 935	975 ~ 1023	45 MHz
WCDMA 2100 – B1	1920 ~ 1980	2110 ~ 2170	Tx: 9612 ~ 9888 Rx: 10562 ~ 10838	190MHz
WCDMA 1900 – B2	1850 ~ 1910	1930 ~ 1990	Tx: 9262 ~ 9538 Rx: 9662 ~ 9938	80MHz
WCDMA 850 – B5	824 ~ 849	869 ~ 894	Tx: 4132 ~ 4233 Rx: 4357 ~ 4458	45MHz
WCDMA 900 – B8	880 ~ 915	925 ~ 960	Tx: 2712 ~ 2863 Rx: 2937 ~ 3088	45MHz

2.3.2. WiFi/Bluetooth

	min	typ	max	unit
Frequency range	2402	-	2482	MHz

2.3.3. GNSS

	min	typ	max	unit
GPS	-	1575.5	-	MHz
Glonass	-	1602	-	MHz

2.4. Applications

xE922-3GR modules can be used for all kind of IoT Gateways.

Example applications can be:

- Reduction of production overheads
- Smart management of productions
- Remote device monitoring

Reproduction forbidden without written authorization from Telit Communications S.p.A. - All Rights Reserved.

- Data retrieval to prevent terror attacks
-

2.5. Sensitivity

- 3G =< -110 dBm
- 2G CS1 =< -111 dBm
- 2G CS4 =< -103 dBm

Reproduction forbidden without written authorization from Telit Communications S.p.A. - All Rights Reserved.

2.6. High level block Diagram

- Digital baseband DBB SoC:

  Intel IoTG Atom x3 (quad-core CPU/GPU), multimedia & connectivity, cellular modem accelerators

  MCP multi chip package memory subsystem (eMMC+ LPDDR3)

- Analog baseband ABB :

  Intel AG620 (WiFi-BT/cellular 2G/3G quad-band transceivers, GNSS receiver,power managemant unit PMU, audio frontend AFE)

- RF front end SAW filters / power amplifiers

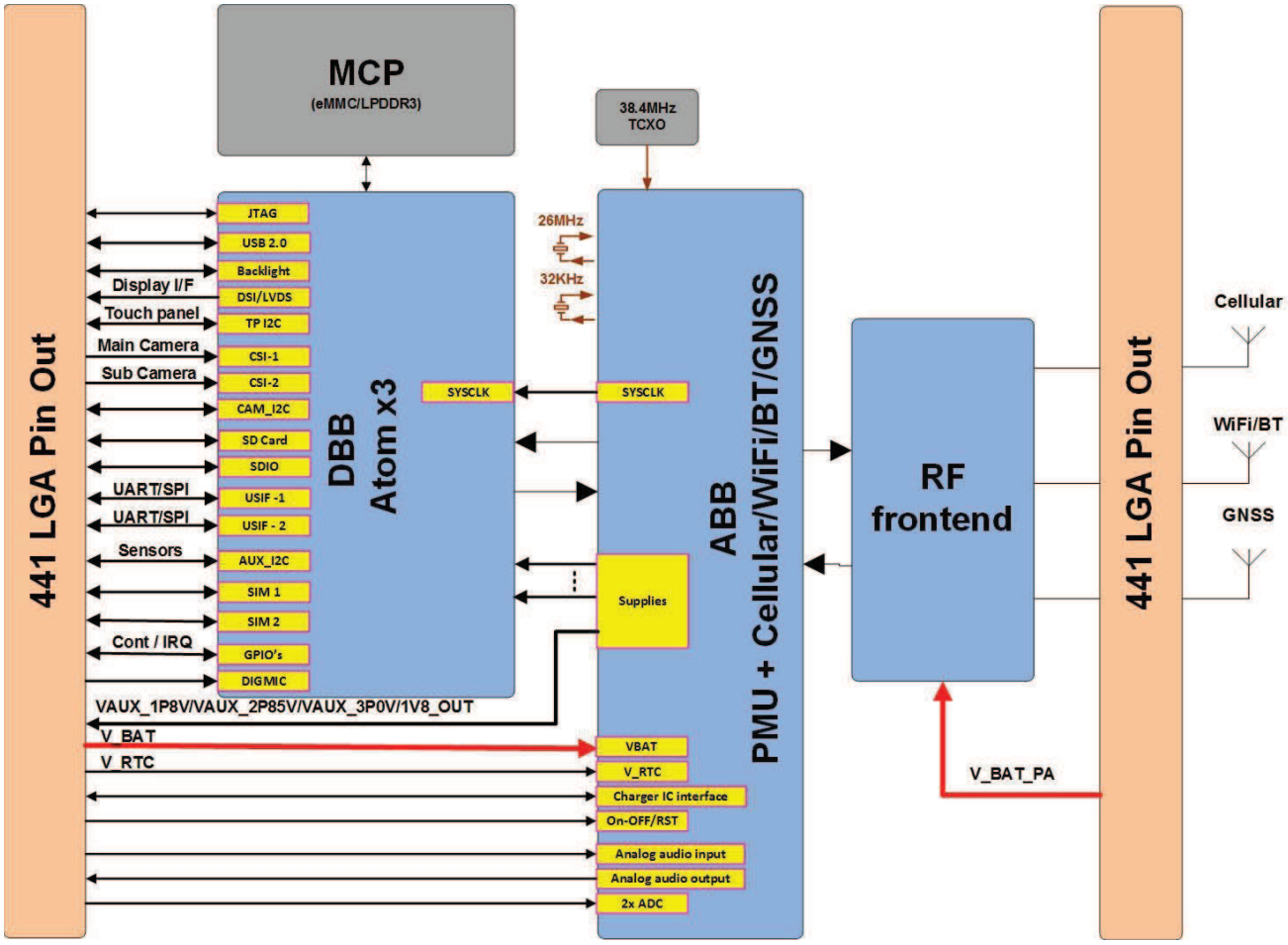

Figure 1

Reproduction forbidden without written authorization from Telit Communications S.p.A. - All Rights Reserved.

2.7. Environmental requirements

2.7.1. Temperature range

Operating Temperature Range	-20 ~ +55°C : This range is defined by 3GPP (the global standard for wireless mobile communication). Telit guarantees its modules to comply with all the 3GPP requirements and to have full functionality of the module with in this range. extended temperature -40 ~ +85°C & commercial temperature 0~+70°C: Telit guarantees full functionality within this range as well. However, there may possibly be some performance deviations in this extended range relative to 3GPP requirements, which means: some RF parameters may deviate from 3GPP specification in the order of few dB. For example: receiver sensitivity or maximum output power may be slightly degraded. Even so, all the functionalities like data connection, SMS , USB communication, UART activation etc. will be maintained, and the effect of such degradations will not lead to malfunction.
Storage and non-operating Temperature Range	–40°C ~ +105°C

Reproduction forbidden without written authorization from Telit Communications S.p.A. - All Rights Reserved.

2.8. xE922-3GR Mechanical Specifications

2.8.1. Dimensions

The Telit xE922-3GR module overall dimensions are:

- Length: 34 mm, +/- 0.15 mm Tolerance
- Width: 40 mm, +/- 0.15 mm Tolerance
- Thickness: 3.0 mm, +/- 0.15 mm Tolerance

2.8.2. Weight

The nominal weight of the xE922-3GR module is 9.7 gram.

2.8.3. RoHS compliance

As a part of Telit corporate policy of environmental protection, the xE922-3GR complies with the RoHS (Restriction of Hazardous Substances) directive of the European Union (EU directive 2011/65/EU).

Reproduction forbidden without written authorization from Telit Communications S.p.A. - All Rights Reserved.

3. xE922-3GR Module pin out

3.1. PIN table

PAD	Signal	I/O	descriptions	Type
USB 2.0 Interface				
W17	USB_ID	AI	USB_ID, USB DRD use	Analog
S17	USB_DP	I/O	USB differential Data (+)	Analog
U17	USB_DN	I/O	USB differential Data (-)	Analog
AR8	VBUS_DET	I	VBUS detection	Analog
Main Camera				
D21	CSI1_DP0	AI	Main Camera CSI Data0 Input Positive	Analog
F21	CSI1_DN0	AI	Main Camera CSI Data0 Input Negative	Analog
M19	CSI1_DP1	AI	Main Camera CSI Data1 Input Positive	Analog
K19	CSI1_DN1	AI	Main Camera CSI Data1 Input Negative	Analog
F19	CSI1_DP2	AI	Main Camera CSI Data2 Input Positive	Analog
H19	CSI1_DN2	AI	Main Camera CSI Data2 Input Negative	Analog
E18	CSI1_DP3	AI	Main Camera CSI Data3 Input Positive	Analog
G18	CSI1_DN3	AI	Main Camera CSI Data3 Input Negative	Analog
C20	CSI1_CLKP	AI	Main Camera CSI Clock Positive	Analog
E20	CSI1_CLKN	AI	Main Camera CSI Clock Negative	Analog
P17	CAM_MCLK	O	Camera MCLK output	CMOS 1.8V
AM17	CAM_I2C_SDA	I/O	Camera I2C Data	CMOS 1.8V
AP17	CAM_I2C_SCL	I/O	Camera I2C Clock	CMOS 1.8V
A4	CAM1_PD	I/O	Main Camera Power Down / GPIO	CMOS 1.8V
G4	CAM1_RESET	I/O	Main Camera Reset / GPIO	CMOS 1.8V
B7	CAM1_FLASH	I/O	Main Camera Flash Triger	CMOS 1.8V
G6	CAM1_TORCH	I/O	Main Camera Torch Enable	CMOS 1.8V
Secondary Camera				
A18	CSI2_DP	AI	Sub Camera CSI Data Input Positive	Analog
C18	CSI2_DN	AI	Sub Camera CSI Data Input Negative	Analog
B19	CSI2_CLKP	AI	Sub Camera CSI Clock Positive	Analog
D19	CSI2_CLKN	AI	Sub Camera CSI Clock Negative	Analog
H3	CAM2_PD	I/O	Sub Camera Power Down / GPIO	CMOS 1.8V
E4	CAM2_RESET	I/O	Sub Camera Reset / GPIO	CMOS 1.8V
MIPI DSI Display Interface				

Reproduction forbidden without written authorization from Telit Communications S.p.A. - All Rights Reserved.

S19	DSI_DP0	AO	LCD DSI Data_0 Positive	Analog
P19	DSI_DN0	AO	LCD DSI Data_0 Negative	Analog
R20	DSI_DP1	AO	LCD DSI Data_1 Positive	Analog
N20	DSI_DN1	AO	LCD DSI Data_1 Negative	Analog
L20	DSI_DP2	AO	LCD DSI Data_2 Positive	Analog
J20	DSI_DN2	AO	LCD DSI Data_2 Negative	Analog
K21	DSI_DP3	AO	LCD DSI Data_3 Positive	Analog
H21	DSI_DN3	AO	LCD DSI Data_3 Negative	Analog
M21	DSI_CLKP	AO	LCD DSI Clock Positive	Analog
P21	DSI_CLKN	AO	LCD DSI Clock Negative	Analog
AP11	LCD_RESET	I/O	LCD Reset / GPIO	CMOS 1.8V
AP9	LCD_TE	I/O	LCD Tearing effect input	CMOS 1.8V
LVDS Display Interface				
W19	LVDS_TA1P	AO	LVDS Data A Positive	Analog
U19	LVDS_TA1N	AO	LVDS Data A Negative	Analog
X18	LVDS_TB1P	AO	LVDS Data B Positive	Analog
V18	LVDS_TB1N	AO	LVDS Data B Negative	Analog
V20	LVDS_TC1P	AO	LVDS Data C Positive	Analog
T20	LVDS_TC1N	AO	LVDS Data C Negative	Analog
Y21	LVDS_TD1P	AO	LVDS Data D Positive	Analog
W21	LVDS_TD1N	AO	LVDS Data D Negative	Analog
U21	LVDS_TCLK1P	AO	LVDS Clock Positive	Analog
S21	LVDS_TCLK1N	AO	LVDS Clock Negative	Analog
LCD Backlight				
AS15	CABC	AI	Content Adaptive Backlight Control	Analog
AS17	LEDFB_DP	AI	Backlight feedback Positive	Analog
AU17	LEDFB_DN	AI	Backlight feedback Negative	Analog
AP13	LEDDRV	AO	Backlight Drive	Analog
Touch Screen interface				
AD17	TP_SDA	I/O	Touch panel I2C Data	CMOS 1.8V
AB17	TP_SCL	I/O	Touch panel I2C Clock	CMOS 1.8V
F7	TP_RESET	I/O	Touch panel Reset	CMOS 1.8V
F11	TP_IRQ	I/O	Touch panel Interrupt	CMOS 1.8V
SD/MMC Card Interface				
AP15	VDD_SD	-	Power supply out for MMC card 1.8/3V	PWR out
J2	SD_CARD_DET	I	MMC card detect(active low)	CMOS_1.8V
F1	SD_DAT0	I/O	MMC card data 0	CMOS_1.8/3V
H1	SD_DAT1	I/O	MMC card data 1	CMOS_1.8/3V
K1	SD_DAT2	I/O	MMC card data 2	CMOS_1.8/3V
M1	SD_DAT3	O	MMC card data3	CMOS_1.8/3V

Reproduction forbidden without written authorization from Telit Communications S.p.A. - All Rights Reserved.

E2	SD_CLK	O	MMC card clock	CMOS_1.8/3V
G2	SD_CMD	I/O	MMC card command	CMOS_1.8/3V
SDIO Interface				
L4	SDIO_CLK	I/O	CLK	CMOS 1.8V
P3	SDIO_CMD	I/O	CMD	CMOS 1.8V
P1	SDIO_DAT0	I/O	SD0	CMOS 1.8V
N2	SDIO_DAT1	I/O	SD1	CMOS 1.8V
M3	SDIO_DAT2	I/O	SD2	CMOS 1.8V
N4	SDIO_DAT3	I/O	SD3	CMOS 1.8V
USIF 1 (UART/SPI)				
W5	USIF1_RXD	I	UART1 / SPI1 Serial data input	CMOS 1.8V
Y5	USIF1_TXD	O	UART1 / SPI1 Serial data Output	CMOS 1.8V
S5	USIF1_SCLK	I/O	UART1 CTS / SPI1 SCLK	CMOS 1.8V
U5	USIF1_CS	O	UART1 RTS / SPI1 Chip Select	CMOS 1.8V
USIF 2 (UART/SPI)				
AH3	USIF2_RXD	I	UART2 / SPI2 Serial data input	CMOS 1.8V
AE4	USIF2_TXD	O	UART2 / SPI2 Serial data Output	CMOS 1.8V
AD5	USIF2_SCLK	I/O	UART2 CTS / SPI2 SCLK	CMOS 1.8V
AJ2	USIF2_CS	O	UART2 RTS / SPI2 Chip Select	CMOS 1.8V
I2C Ports				
AS1	AUX_I2C_SDA	I/O	I2C3 Data (AUX / Sensors)	CMOS 1.8V
AT2	AUX_I2C_SCL	I/O	I2C3 Clock (AUX / Sensors)	CMOS 1.8V
AC18	CHG_I2C_SCL	I/O	Charger I2C Clock	CMOS 1.8V
AE18	CHG_I2C_SDA	I/O	Charger I2C Data	CMOS 1.8V
SIM card interface 1				
AM5	VSIM1	-	External SIM signal 1 – Power supply for the SIM	1.8 / 2.85V
AR6	SIMCLK1	O	External SIM signal 1 – Clock	1.8 / 2.85V
AN10	USIM1_DETECT	I	External SIM signal 1 – Card detect (Active low)	CMOS 1.8V
AT6	SIMIO1	I/O	External SIM signal 1 – Data I/O	1.8 / 2.85V
AN6	SIMRST1	O	External SIM signal 1 – Reset	1.8 / 2.85V
SIM card interface 2				
AK3	VSIM2	-	External SIM signal 2 – Power supply for the SIM	1.8 / 2.85V
AS7	SIMCLK2	O	External SIM signal 2 – Clock	1.8 / 2.85V
AR10	USIM2_DETECT	I	External SIM signal 2 – Card detect (Active low)	CMOS 1.8V
AU7	SIMIO2	I/O	External SIM signal 2 – Data I/O	1.8 / 2.85V
AP7	SIMRST2	O	External SIM signal 2 – Reset	1.8 / 2.85V
Analog Audio				
AK21	EP_P	AO	Differential Earpiece Positive	Analog
AM21	EP_N	AO	Differential Earpiece Negative	Analog
AG20	MICP1	AI	Earpiece microphone 1 signal input; phase+	Analog

Reproduction forbidden without written authorization from Telit Communications S.p.A. - All Rights Reserved.

AE20	MICN1	AI	Earpiece microphone 1 signal input; phase-	Analog
AF19	MICP2	AI	Headset microphone 2 signal input; phase+	Analog
AH19	MICN2	AI	Headset microphone 2 signal input; phase-	Analog
AJ18	VMIC_BIAS	AO	Analog Microphone bias	PWR out
AJ20	HP_OUT_R	AO	Headset Right Signal Out	Analog
AL20	HP_OUT_L	AO	Headset Left Signal Out	Analog
AH21	SPKR_LP	AO	Speaker Signal Out Positive	Analog
AF21	SPKR_LN	AO	Speaker Signal Out Negative	Analog
Digital microphone				
AV12	DIG_MIC_CLK	DI	Digital microphone Clock Output	CMOS 1.8V
AN12	DIG_MIC_D1	DI	Digital microphone 1 signal input;	CMOS 1.8V
AT12	DIG_MIC_D2	DI	Digital microphone 2 Clock input;	CMOS 1.8V
AG18	MIC_VDD	AO	MEMS/DIG Microphone Power Supply	PWR out
RF Antenna				
AE2	ANT_MAIN	A	Main Cellular RF antenna	RF
T2	ANT_GPS	A	GPS Antenna	RF
AV14	ANT_WIFI_BT	A	WiFi /BT Antenna	RF
DIGITAL GPIO				
AV8	GPIO0_EINT5	I/O	GPIO / External IRQ	CMOS 1.8V
AT8	GPIO1_EINT2	I/O	GPIO / External IRQ, Used for SoC USB ID WU from Sleep	CMOS 1.8V
AS11	GPIO5_EINT7	I/O	GPIO / USB_FAULT IRQ	CMOS 1.8V
G10	GPIO44	I/O	GPIO	CMOS 1.8V
E10	GPIO45	I/O	GPIO	CMOS 1.8V
A10	GPIO46	I/O	GPIO	CMOS 1.8V
H9	GPIO47	I/O	GPIO	CMOS 1.8V
F9	GPIO48	I/O	GPIO	CMOS 1.8V
B9	GPIO49	I/O	GPIO	CMOS 1.8V
G8	GPIO50	I/O	GPIO	CMOS 1.8V
E8	GPIO51	I/O	GPIO	CMOS 1.8V
A8	GPIO52_EINT15	I/O	GPIO / External IRQ	CMOS 1.8V
H17	GPIO53	I/O	GPIO / MIPI Trace Clock	CMOS 1.8V
K5	GPIO54_EINT1	I/O	GPIO / External IRQ	CMOS 1.8V
G14	GPIO55_EINT15	I/O	GPIO / External IRQ	CMOS 1.8V
H7	GPIO56	I/O	GPIO	CMOS 1.8V
B11	GPIO57_EINT9	I/O	GPIO / External IRQ	CMOS 1.8V
D11	GPIO58_EINT2	I/O	GPIO / External IRQ	CMOS 1.8V
E6	GPIO63_EINT8	I/O	GPIO / External IRQ	CMOS 1.8V
A6	GPIO64_EINT13	I/O	GPIO / External IRQ	CMOS 1.8V
H5	GPIO65	I/O	GPIO	CMOS 1.8V
F5	GPIO66_EINT15	I/O	GPIO / External IRQ	CMOS 1.8V

Reproduction forbidden without written authorization from Telit Communications S.p.A. - All Rights Reserved.

B5	GPIO67_EINT0	I/O	GPIO / External IRQ	CMOS 1.8V
F3	GPIO72_EINT9	I/O	GPIO / External IRQ	CMOS 1.8V
B3	GPIO73_EINT10	I/O	GPIO / External IRQ	CMOS 1.8V
Miscellaneous Functions				
AR16	ON_OFF	I	Power ON/OFF	
AU5	MAIN_RESET_IN	I	MAIN_RESET	
AR14	LED_CURSINK	I	GP LED Driver (Sink)	
AS5	HW_KEY	I	Product ID for Production testing	
AN8	GNSS_FTA		Used internally (do not connect)	
AN14	CHG_RST_OUT	O	External Charger Reset	
AB21	CHG_INT_IN	I	Charger IRQ	
AN16	CHG_POK_IN	I	Charger Power OK indication	
AW17	VBUS_PWR_EN	O	Enable External VBUS source for DRD	
AV16	FG_IBATP	I	Battery Fuel Gauge Positive	
AT16	FG_IBATN	I	Battery Fuel Gauge Negative	
AM19	ADC_VBATMEAS	I	Battery/DC-supply measurement ADC	
ADC Ports				
AL18	ADC_IN0	AI	Analog to Digital converter (Batt ID)	Analog
AK19	ADC_IN1	AI	Analog to Digital converter (Batt Temp)	Analog
JTAG				
AT4	JTAG_TDO	O	JTAG	CMOS 1.8V
AN4	JTAG_TDI	I	JTAG	CMOS 1.8V
AR4	JTAG_TMS	I	JTAG	CMOS 1.8V
AV4	JTAG_TCK	O	JTAG	CMOS 1.8V
AW5	JTAG_TRST	O	JTAG	CMOS 1.8V
AW3	JTAG_RTCK	I	JTAG	CMOS 1.8V
Power Supply In / OUT				
AR18	V_BAT_1	-	Main power supply for Baseband	PWR in
AS19	V_BAT_2	-	Main power supply for Baseband	PWR in
AR20	V_BAT_3	-	Main power supply for Baseband	PWR in
AT20	V_BAT_4	-	Main power supply for Baseband	PWR in
AV20	V_BAT_5	-	Main power supply for Baseband	PWR in
AS21	V_BAT_6	-	Main power supply for Baseband	PWR in
AU21	V_BAT_7	-	Main power supply for Baseband	PWR in
AV18	V_BAT_PA_1	-	Main power supply for PA	PWR in
AT18	V_BAT_PA_2	-	Main power supply for PA	PWR in
AU19	V_BAT_PA_3	-	Main power supply for PA	PWR in
AK17	1V8_OUT	-	1.8V Supply / Reference for external peripherals	PWR out
AA18	VAUX_1P8V	-	Camera 1.8V or auxiliary configurable power supply	PWR out
AH17	VAUX_2P85V	-	Camera 2.85V or auxiliary configurable power supply	PWR out

Reproduction forbidden without written authorization from Telit Communications S.p.A. - All Rights Reserved.

AA4	VAUX_3P0V	-	Auxiliary 3.0V power supply (shared with internal eMMC supply)	PWR out
AA20	V_RTC	-	RTC backup	PWR in
GND				
A2	GND	-		GROUND
A14	GND	-		GROUND
A20	GND	-		GROUND
B1	GND	-		GROUND
B13	GND	-		GROUND
B21	GND	-		GROUND
C4	GND	-		GROUND
C6	GND	-		GROUND
C8	GND	-		GROUND
C10	GND	-		GROUND
C12	GND	-		GROUND
D1	GND	-		GROUND
D3	GND	-		GROUND
D5	GND	-		GROUND
D7	GND	-		GROUND
D9	GND	-		GROUND
D13	GND	-		GROUND
E16	GND	-		GROUND
F17	GND	-		GROUND
G20	GND	-		GROUND
H11	GND	-		GROUND
H13	GND	-		GROUND
H15	GND	-		GROUND
J4	GND	-		GROUND
J6	GND	-		GROUND
J8	GND	-		GROUND
J10	GND	-		GROUND
J12	GND	-		GROUND
J14	GND	-		GROUND
J16	GND	-		GROUND
J18	GND	-		GROUND
K3	GND	-		GROUND
K7	GND	-		GROUND
K9	GND	-		GROUND
K11	GND	-		GROUND
K13	GND	-		GROUND
K15	GND	-		GROUND

Reproduction forbidden without written authorization from Telit Communications S.p.A. - All Rights Reserved.

L2	GND	-		GROUND
L6	GND	-		GROUND
L8	GND	-		GROUND
L10	GND	-		GROUND
L12	GND	-		GROUND
L14	GND	-		GROUND
L16	GND	-		GROUND
M5	GND	-		GROUND
M7	GND	-		GROUND
M9	GND	-		GROUND
M11	GND	-		GROUND
M13	GND	-		GROUND
M15	GND	-		GROUND
M17	GND	-		GROUND
N6	GND	-		GROUND
N8	GND	-		GROUND
N10	GND	-		GROUND
N12	GND	-		GROUND
N14	GND	-		GROUND
N16	GND	-		GROUND
P7	GND	-		GROUND
P9	GND	-		GROUND
P11	GND	-		GROUND
P13	GND	-		GROUND
P15	GND	-		GROUND
R2	GND	-		GROUND
R6	GND	-		GROUND
R8	GND	-		GROUND
R10	GND	-		GROUND
R12	GND	-		GROUND
R14	GND	-		GROUND
R16	GND	-		GROUND
S1	GND	-		GROUND
S3	GND	-		GROUND
S7	GND	-		GROUND
S9	GND	-		GROUND
S11	GND	-		GROUND
S13	GND	-		GROUND
S15	GND	-		GROUND
T6	GND	-		GROUND

Reproduction forbidden without written authorization from Telit Communications S.p.A. - All Rights Reserved.

T8	GND	-		GROUND
T10	GND	-		GROUND
T12	GND	-		GROUND
T14	GND	-		GROUND
T16	GND	-		GROUND
U1	GND	-		GROUND
U3	GND	-		GROUND
U7	GND	-		GROUND
U9	GND	-		GROUND
U11	GND	-		GROUND
U13	GND	-		GROUND
U15	GND	-		GROUND
V2	GND	-		GROUND
V6	GND	-		GROUND
V8	GND	-		GROUND
V10	GND	-		GROUND
V12	GND	-		GROUND
V14	GND	-		GROUND
V16	GND	-		GROUND
W7	GND	-		GROUND
W9	GND	-		GROUND
W11	GND	-		GROUND
W13	GND	-		GROUND
W15	GND	-		GROUND
X4	GND	-		GROUND
X6	GND	-		GROUND
X8	GND	-		GROUND
X10	GND	-		GROUND
X12	GND	-		GROUND
X14	GND	-		GROUND
X16	GND	-		GROUND
X20	GND	-		GROUND
Y7	GND	-		GROUND
Y9	GND	-		GROUND
Y11	GND	-		GROUND
Y13	GND	-		GROUND
Y15	GND	-		GROUND
Y19	GND	-		GROUND
AA6	GND	-		GROUND
AA8	GND	-		GROUND

Reproduction forbidden without written authorization from Telit Communications S.p.A. - All Rights Reserved.

AA10	GND	-		GROUND
AA12	GND	-		GROUND
AA14	GND	-		GROUND
AA16	GND	-		GROUND
AB5	GND	-		GROUND
AB7	GND	-		GROUND
AB9	GND	-		GROUND
AB11	GND	-		GROUND
AB13	GND	-		GROUND
AB15	GND	-		GROUND
AC2	GND	-		GROUND
AC6	GND	-		GROUND
AC8	GND	-		GROUND
AC10	GND	-		GROUND
AC12	GND	-		GROUND
AC14	GND	-		GROUND
AC16	GND	-		GROUND
AC20	GND	-		GROUND
AD1	GND	-		GROUND
AD3	GND	-		GROUND
AD7	GND	-		GROUND
AD9	GND	-		GROUND
AD11	GND	-		GROUND
AD13	GND	-		GROUND
AD15	GND	-		GROUND
AD21	GND	-		GROUND
AE6	GND	-		GROUND
AE8	GND	-		GROUND
AE10	GND	-		GROUND
AE12	GND	-		GROUND
AE14	GND	-		GROUND
AE16	GND	-		GROUND
AF1	GND	-		GROUND
AF3	GND	-		GROUND
AF5	GND	-		GROUND
AF7	GND	-		GROUND
AF9	GND	-		GROUND
AF11	GND	-		GROUND
AF13	GND	-		GROUND
AF15	GND	-		GROUND

Reproduction forbidden without written authorization from Telit Communications S.p.A. - All Rights Reserved.

AF17	GND	-		GROUND
AG2	GND	-		GROUND
AG4	GND	-		GROUND
AG6	GND	-		GROUND
AG8	GND	-		GROUND
AG10	GND	-		GROUND
AG12	GND	-		GROUND
AG14	GND	-		GROUND
AG16	GND	-		GROUND
AH5	GND	-		GROUND
AH7	GND	-		GROUND
AH9	GND	-		GROUND
AH11	GND	-		GROUND
AH13	GND	-		GROUND
AH15	GND	-		GROUND
AJ4	GND	-		GROUND
AJ6	GND	-		GROUND
AJ8	GND	-		GROUND
AJ10	GND	-		GROUND
AJ12	GND	-		GROUND
AJ14	GND	-		GROUND
AJ16	GND	-		GROUND
AK5	GND	-		GROUND
AK7	GND	-		GROUND
AK9	GND	-		GROUND
AK11	GND	-		GROUND
AK13	GND	-		GROUND
AK15	GND	-		GROUND
AL2	GND	-		GROUND
AL4	GND	-		GROUND
AL6	GND	-		GROUND
AL8	GND	-		GROUND
AL10	GND	-		GROUND
AL12	GND	-		GROUND
AL14	GND	-		GROUND
AL16	GND	-		GROUND
AM1	GND	-		GROUND
AM3	GND	-		GROUND
AM7	GND	-		GROUND
AM9	GND	-		GROUND

Reproduction forbidden without written authorization from Telit Communications S.p.A. - All Rights Reserved.

AM11	GND	-		GROUND
AM13	GND	-		GROUND
AM15	GND	-		GROUND
AN18	GND	-		GROUND
AN20	GND	-		GROUND
AP1	GND	-		GROUND
AP3	GND	-		GROUND
AP19	GND	-		GROUND
AP21	GND	-		GROUND
AR2	GND	-		GROUND
AS3	GND	-		GROUND
AT10	GND	-		GROUND
AT14	GND	-		GROUND
AU1	GND	-		GROUND
AU3	GND	-		GROUND
AU9	GND	-		GROUND
AU11	GND	-		GROUND
AU13	GND	-		GROUND
AU15	GND	-		GROUND
AV2	GND	-		GROUND
AV6	GND	-		GROUND
AW1	GND	-		GROUND
AW7	GND	-		GROUND
AW9	GND	-		GROUND
AW11	GND	-		GROUND
AW13	GND	-		GROUND
AW15	GND	-		GROUND
AW19	GND	-		GROUND
AW21	GND	-		GROUND
RFU				
D17	RFU1	-		
B17	RFU2	-		
C16	RFU3	-		
A16	RFU4	-		
C2	RFU5	-		
AS13	RFU6	-		
K17	RFU7	-		
AS9	RFU8	-		
AN2	RFU9	-		
AK1	RFU10	-		

Reproduction forbidden without written authorization from Telit Communications S.p.A. - All Rights Reserved.

AH1	RFU11	-		
P5	RFU12	-		
R4	RFU13	-		
T4	RFU14	-		
V4	RFU15	-		
AP5	RFU16	-		
W3	RFU17	-		
Y3	RFU18	-		
AB3	RFU19	-		
AC4	RFU20	-		
X2	RFU21	-		
AA2	RFU22	-		
W1	RFU23	-		
Y1	RFU24	-		
AB1	RFU25	-		
C14	RFU26	-		
G16	RFU27	-		
A12	RFU28	-		
F15	RFU29	-		
G12	RFU30	-		
E12	RFU31	-		
E14	RFU32	-		
F13	RFU33	-		
D15	RFU34	-		
B15	RFU35	-		
T18	RFU36	-		
R18	RFU37	-		
N18	RFU38	-		
L18	RFU39	-		
AR12	RFU40	-		
Y17	RFU41	-		
AB19	RFU42	-		
AD19	RFU43	-		
AV10	RFU44	-		

NOTE:

Unless otherwise specified, RFU pins must be left unconnected (Floating).

Reproduction forbidden without written authorization from Telit Communications S.p.A. - All Rights Reserved.

3.2. LGA Pads Layout

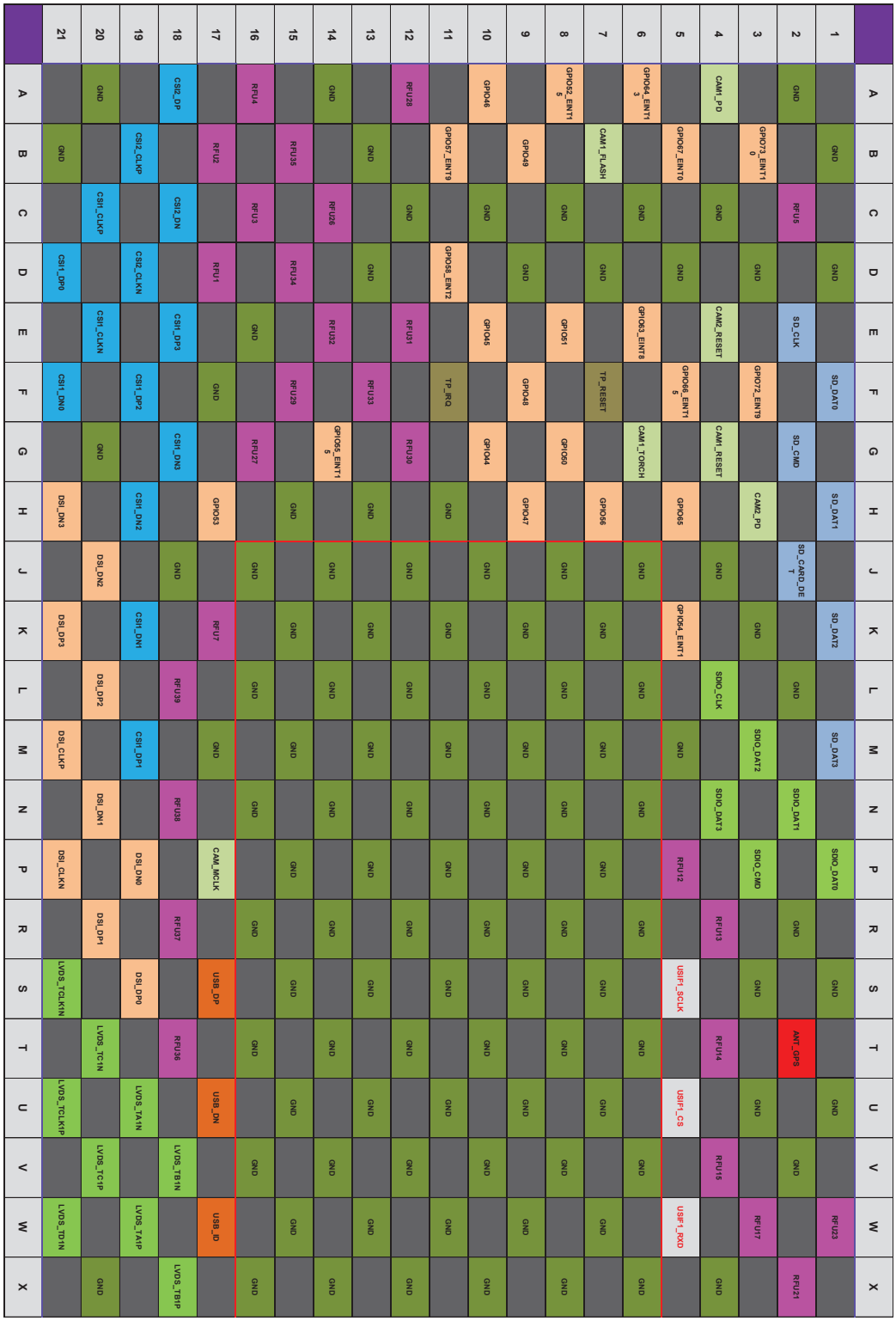

Reproduction forbidden without written authorization from Telit Communications S.p.A. - All Rights Reserved.

	1	2	3	4	5	6	7	8	9	10	11	12	13	14	15	16	17	18	19	20	21
Y	RFU24		RFU18		USIF1_TXD		GND		GND		GND		GND		GND		RFU41		GND		LVDS_TDIP
AA		RFU22		VAUX_3P0V		GND	GND	GND	GND	GND	GND	GND	GND	GND	GND	GND		VAUX_1P8V		V_RTC	
AB	RFU25		RFU19		GND		GND	GND	GND		GND		GND		GND		TP_SCL		RFU42		CHG_INT_IN
AC		GND		RFU20		GND	GND	GND	GND	GND	GND	GND	GND	GND		GND		CHG_I2C_SCL		GND	
AD	GND		GND		USIF2_SCLK		GND	GND	GND		GND		GND		GND		TP_SDA		RFU43		GND
AE		ANT_MAIN		USIF2_TXD		GND	GND	GND	GND	GND	GND	GND	GND	GND		GND		CHG_I2C_SDA		MICN1	
AF	GND		GND		GND		GND	GND	GND		GND		GND		GND		GND		MICP2		SPKR_LN
AG		GND		GND		GND	GND	GND	GND	GND	GND	GND	GND	GND		GND		MIC_VDD		MICP1	
AH	RFU1		USIF2_RXD		GND		GND	GND	GND		GND		GND		GND		VAUX_2P85V		MICN2		SPKR_LP
AJ		USIF2_CS		GND		GND	GND	GND	GND	GND	GND	GND		GND		GND		VMIC_BIAS		HP_OUT_R	
AK	RFU10		VSIM2		GND		GND	GND	GND		GND		GND		GND		1V8_OUT		ADC_IN1		EP_P
AL		GND		GND		GND	GND	GND	GND	GND	GND	GND		GND		GND		ADC_IN0		HP_OUT_L	
AM	GND		GND		VSIM1		GND	GND	GND		GND		GND		GND		CAM_I2C_SDA		ADC_VBATTMEAS		EP_N
AN		RFU19		JTAG_TDI		SIMRST1		GPIO7		USIM1_DETECT		DIG_MIC_D1		CHG_RST_OUT		CHG_PGK_IN		GND		GND	
AP	GND		GND		RFU16		SIMRST2		LCD_TE		LCD_RESET		LEDDRV		VDD_SD		CAM_I2C_SCL		GND		GND
AR		GND		JTAG_TMS		SIMCLK1		VBUS_DET		USIM2_DETECT		RFU40		LED_CURSINK		ON_OFF		V_BAT_1		V_BAT_3	
AS	AUX_I2C_SDA		GND		HW_KEY		SIMCLK2		RFU8		GPIO5_EINT7		RFU6		CABC		LEDFB_DP		V_BAT_2		V_BAT_6
AT		AUX_I2C_SCL		JTAG_TDO		SIMIO1		GPIO1_EINT2		GND		DIG_MIC_D2		GND		FG_IBATN		V_BAT_PA_2		V_BAT_4	
AU	GND		GND		MAIN_RESET_IN		SIMIO2		GND		GND		GND		GND		LEDFB_DN		V_BAT_PA_3		V_BAT_7
AV		GND		JTAG_TCK		GND		GPIO0_EINT5		RFU44		DIG_MIC_CLK		ANT_WIFI		FG_IBATP		V_BAT_PA_1		V_BAT_5	
AW	GND		JTAG_RTCK		JTAG_TRST		GND		GND		GND		GND		GND		VBUS_PWR_EN		GND		GND

Reproduction forbidden without written authorization from Telit Communications S.p.A. - All Rights Reserved.

4. Electrical specifications

4.1. Absolute maximum ratings – not operational

A deviation from listed below values range may harm the xE922-3GR module.

Symbol	Parameter	Min	Max	Unit
VBATT	battery supply voltage on pin VBATT	-0.3	+5.5	[V]
VBATT_PA	battery supply voltage on pin VBATT_PA	-0.3	+6.0	[V]

4.2. Recommended operating conditions

Symbol	Parameter	Min	Typ	Max	Unit
T_{case}	Case temperature (1)	-40	+25	+85	[°C]
VBATT	Battery supply voltage on pin VBATT	3.6	3.8	4.2	[V]
VBATT_PA	Battery supply voltage on pin VBATT_PA	3.6	3.8	4.2	[V]
$I_{BATT_PA} + I_{BATT}$	Peak current to be used to dimension decoupling capacitors on pin VBATT_PA	-	2	-	[A]

(1) T_{case} case temperature: measured at top side shield of module

4.3. Logic Level Specifications

Unless otherwise specified, all the interface circuits of the xE922-3GR are 1.8V CMOS logic.

Only few specific interfaces (such as USIM) are capable of dual voltage I/O.

The following table shows the logic level specifications used in the Telit xE922-3GR interface circuits:

NOTE:

Do not connect xE922-3GR's digital logic signal directly to OEM's digital logic signal with a level higher than 2.1V for 1.8V CMOS signals.

Reproduction forbidden without written authorization from Telit Communications S.p.A. - All Rights Reserved.

For 1.8V CMOS signals:

Absolute Maximum Ratings - Not Functional

Parameter	xE922-3GR	
	Min	Max
Input level on any digital pin when on	-0.3V	+2.16V
Input voltage on analog pins when on	-0.3V	+2.16 V

Operating Range - Interface levels (1.8V CMOS)

	Parameter	xE922-3GR		Unit	condition
		Min	Max		
V_{IH}	Input high level	1.3V	2.1V	[V]	
V_{IL}	Input low level	-0.3V	0.5V	[V]	
V_{OH}	Output high level	1.6V		[V]	Ioh= 0.1 mA
V_{OL}	Output low level		0.2V	[V]	Ioh = -0.1mA
I_{IL}	Low-level input current		1.5	[µA]	no PU/PD
I_{IH}	High-level input current		1.3	[µA]	no PU/PD
$R_{PU/PD}$	pull up/down resistance	7.2	45	[kΩ]	
I_source/sink	GPIO drive strength	2	12	[mA]	Configurable 2,4,8,12 mA Vdrv_HIGH=1.62V/LOW=0.18V

Reproduction forbidden without written authorization from Telit Communications S.p.A. - All Rights Reserved.

5. Power supply

5.1. Input supply

There are 2 input power supplies defined on the xE922-3GR module,

V_BAT, V_BAT_PA.

V_BAT_PA pin supplies transmit RF front end (RFFE) power amplifiers (PA) of the cellular network (2G/3G) connection feature of the module.

V_BAT pin supplies the remaining module circuitry, distributed via an internal power management unit (PMU).

Although defined separately, V_BAT and V_BAT_PA can be connected together. The split implementation allows for separate power consumption characterization of the RFFE as well as optional noise filtering network to isolate V_BAT from the typical bursty character of V_BAT_PA in 2G mode operation.

NOTE:

In GSM/GPRS mode, RF transmission is not continuous and is packed into bursts at a base frequency of about 216 Hz with relative current peaks as high as about 2 A. Therefore the power supply must be designed to withstand these current peaks (from V_BAT_PA input supply pin) without big voltage drops; this means that both the electrical design (current rating and/or decoupling buffer capacitors) and the board layout must be designed for this current flow. If the layout of the PCB is not well designed, a strong noise floor is generated on the ground. This will reflect on all the audio paths producing an audible annoying noise at 216 Hz; if the voltage drops during the peaks, current absorption is too high. The device may even shut down as a consequence of the supply voltage drop.

Reproduction forbidden without written authorization from Telit Communications S.p.A. - All Rights Reserved.

Both V_BAT_PA and V_BAT are protected by Zener transient voltage suppressor diodes internal the module.

Although the internal transient suppressor also protects for reverse polarized input supply application, its max power dissipation is limited as well.

For performance specification of this protection please consult the datasheet. (DF3A6.8FUT1 / ON Semiconductor)

A low ESR buffer capacitor of adequate capacity must be provided on the application main board in order to cut the current absorption peaks (either from system load or during cellular load TX slots , up to 2 A), taking into account the sourcing power supply circuitry implementation is limited qua current rating and/or transient response timing. The buffer capacitor must be selected in order to guarantee at all time V_BAT > BUV battery under voltage (typical 3.0V).

For information, the total 'distributed' capacitance already present inside the module:

- V_BAT_PA : 33uF
- V_BAT : 82uF

5.2. Output supply

5.2.1. Linear voltage regulators

5.2.1.1. VAUX_1P8V

parameter	symbol	value			unit	condition	Default value	Default state
		Min	Typ	max				
External cappacitor	Cext		1000	1400	nF			
Cappacitor ESR	R_esr			100	ohm	100 Hz		
				0.05	ohm	1 MHz…30MHz		
Output voltage	Vreg	1.8		2.85	V	Configurable 1.8/2.5/2.8/2.85V	2.85V	OFF
Output Current	Ireg max			225	mA			
Current Limitation	Imax		400		mA	50% nominal LDO voltage		

Reproduction forbidden without written authorization from Telit Communications S.p.A. - All Rights Reserved.

5.2.1.2. VAUX_2P85V

parameter	symbol	value			unit	condition	Default value	Default state
		Min	Typ	max				
External cappacitor	Cext		1000	1400	nF			
Cappacitor ESR	R_esr			100	ohm	100 Hz		
				0.05	ohm	1 MHz…30MHz		
Output voltage	Vreg	1.8		2.85	V	Configurable 1.8/2.5/2.8/2.85V	2.85V	OFF
Output Current	Ireg max			225	mA			
Current Limitation	Imax		400		mA	50% nominal LDO voltage		

5.2.1.3. VAUX_3P0V

parameter	symbol	value			unit	condition	Default value	Default state
		Min	Typ	max				
External cappacitor	Cext		1000		nF			
Cappacitor ESR	R_esr			100	ohm	100 Hz		
				0.05	ohm	1 MHz…30MHz		
Output voltage	Vreg		3.0		V			ON
Current Limitation	Imax	1			A	V_BAT>3.5V		

Note:

VAUX_3P0V is also applied internally the module, feeding the flash memory part of the eMCP memory.

Reproduction forbidden without written authorization from Telit Communications S.p.A. - All Rights Reserved.

The datasheet of the eMCP specifies a maximum current consumption on this powersupply line of about 150mA (read operation).

Care should be exercised to limit the total power consumption, to keep heat dissipation limited:

Power_dissipation = (V_BAT-3.0V) x (150mA_max+I_external)

5.2.1.4. VSIM1/2

parameter	symbol	value			unit	condition	Default value	Default state
		Min	Typ	max				
External cappacitor	Cext		100	135	nF			
Cappacitor ESR	R_esr			100	ohm	100 Hz		
				0.05	ohm	1 MHz…30MHz		
Output voltage	Vreg	1.2		2.91	V		2.91V	ON
Output Current	Ireg max	30			mA			
Current Limitation	Imax		80		mA			

5.2.2. DC/DC stepdown

5.2.2.1. 1V8_OUT

parameter	symbol	value			unit	condition	Default value	Default state
		Min	Typ	max				
Output capacitor	Cout	11	22	+35%	uF	internal module tot.cap +/-32 uF		
Capacitor ESR	R_esr			100	ohm	100 Hz		
				0.05	ohm	1 MHz…10MHz		
Output voltage	Vreg		1.8		V		1.8V	ON
Output	Ireg			1.2	A			

Reproduction forbidden without written authorization from Telit Communications S.p.A. - All Rights Reserved.

Current	max							
Pull-downr resistor	Rpd			200	ohm	DC/DC is OFF		
Switching frequency	F_dcdc	-3%	3.2	+3%	MHz			

Note:

1V8_OUT is also applied internally the module feeding several I/O peripherals, memory interface and analog RF parts (depending on use case).

Care should be exercised to keep external current dissipation limited in order not to exceed the maximum output current of the DC/DC regulator.

1V8_OUT external usage is primarily targeted for IO reference level or supplying levelshift devices.

5.3. Typical system power consumption

Test conditions:

- room temperature 22deg, still air, no heatsink
- V_BAT/V_BAT_PA= 3.8V
- 50 ohm antenna load impedance
- Display and camera supply current excluded (separately powered)

WLAN related use cases are executed with WiFi hotspot serving the DUT as only client, inside RF shield box.

These are typical power consumption measured at room temperature, with the module mounted on Telit's reference carrier board, no heatsink applied.

At higher ambient temperature condition one can expect higher current consumption due to increasing leakage currents.

SW release: MR1 // sf3gr_telit_he922-flashfiles-eng.android_a60_ww33_camera_orientation.

Type	description	[mA]
off	Module powered off	0.15
idle	Idle Display On	200
	WLAN Active Idle (3G cell registered)	18
	3G Active Idle	21

Reproduction forbidden without written authorization from Telit Communications S.p.A. - All Rights Reserved.

standby	Flight Mode	2.6
	WLAN Idle associated (3G cell registered)	8.6
	2G Standby, DRX5	
	GSM850	4.8
	GSM900	4.8
	DCS1800	4.8
	PCS1900	6.3
	3G Standby, DRX7	
	B1	4
	B2	4.7
	B5	4.1
	B8	4.1
Data traffic	GPRS 4TX(gamma10)/1RX PS	
	GSM850	212
	GSM900	220
	DCS1800	173
	PCS1900	185
	3G 24dBm RMC 12.2kbps	
	B1	572
	B2	713
	B5	480
	B8	600
Audio Playback	MP3 Playback, Wired Headset, flight mode	103
Video Playback	Video Playback 720p 30fps H.264, HP level 4.0, 4Mb/s, Airplane Mode, Landscape Mode	345

Reproduction forbidden without written authorization from Telit Communications S.p.A. - All Rights Reserved.

	Video Streaming HTML5 WLAN -H.264 -720p	776
	Video Streaming HTML5 3G -H.264 -720p chrome52	959
Browsing	Browsing Chrome HTML5 -WLAN	448
	Browsing Chrome HTML5 -3G	560
Imaging	User mode image capture, 3G idle	TBD
	Video Recording, HD 720p 30fps AVC baseline 3.1, 1.5Mbps, 3G idle	876
GNSS	Tracking mode (non-assisted) : GPX Logger app (typical driving test), airplane mode	140
	Acquisitioning mode (non-assisted) 8 satellites / -130dBm	TBD
	Tracking mode (non-assisted) 8 satellites / -130dBm	TBD
BT	Upload file sending	460
	Download file receiving	535
	BT enabled , no device connected	3
	1 BLE sensor device connected, no data	4.6
	1 BLE sensor notifying @1second period	84
	1 BLE sensor notifying @5second period	37
	6 BLE sensors device connected, no data	10
	6 BLE sensors notifying @1second period	89
	6 BLE sensors notifying @5second period	86

5.4. RTC backup

The internal PMU features real-time clock (RTC) based on 32 kHz oscillator, to keep track of date and time. This feature is supplied by an internal LDO V_RTC, typical 2.3V +-5%.

V_RTC is ‘always on’ when V_BAT supply is present (>2.5V min).

V_RTC is internally decoupled with 100 nF. When V_BAT is removed from the module, in case RTC tracking is needed an external supercap is required connected to module pin V_RTC.

Reproduction forbidden without written authorization from Telit Communications S.p.A. - All Rights Reserved.

The following table gives an overview of V_RTC minimum voltage level requirements in order to keep RTC running:

condition	minimum V_RTC [V]		
	min	Typ	max
room temperature		0.8	1.1
-40 to +125deg		0.9	1.2

So typically at room temperature a voltage difference of 2.3V – 0.8V = 1.5V is available for buffering the RTC supply in case V_BAT is removed.

An external capacitor for RTC buffering can be added, typical 100uF, up to maximum 220uF directly to the LGA pin V_RTC.

In case an extreme large (super) capacitor, typical 1 F, is applied, a series resistor of typical 470 Ohm should be added.

Typical current drawn from V_RTC by the RTC clock: 2.6µA

An RTC alarm is one of the possible events to power ON the module.

Reproduction forbidden without written authorization from Telit Communications S.p.A. - All Rights Reserved.

6. Power ON/OFF and reset control

6.1. Power On

Once power applied to the V_BAT, the power on can be triggered by four possible events:

- ON_OFF key event (+ application of power to system with 'first connect' enabled)
- External charger detection (CHG_POK)
- RTC alarm

6.1.1. ON_OFF key action

If the ON_OFF key is forced by external circuitry to V_RTC, the sytem startup procedure begins.

- Active logic : HIGH
- T_on minimum : 100msec
- Debounce :15msec

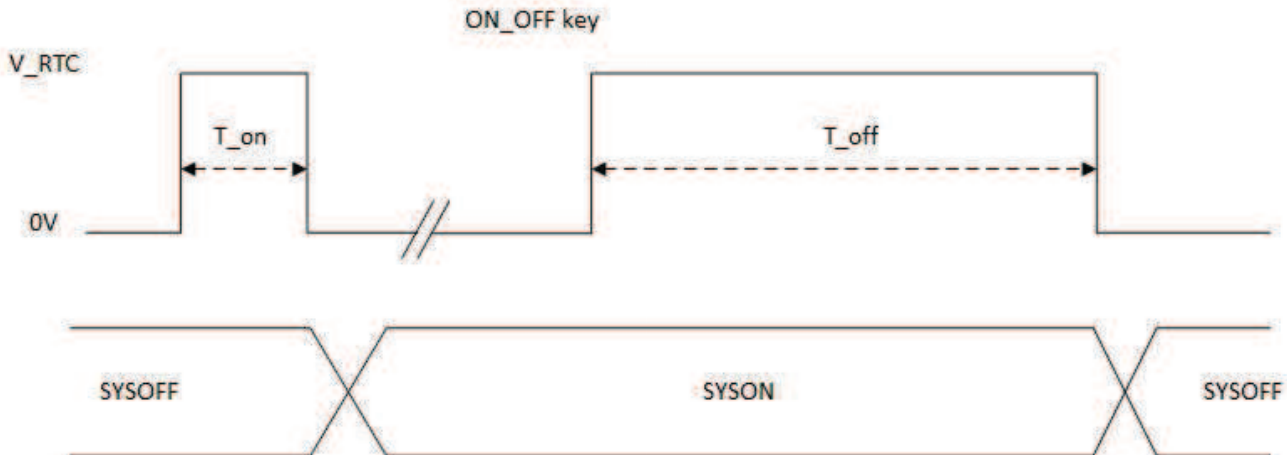

When the system is supplied with V_BAT for the first time, it will automatically start up without waiting for an event.

This so called 'first connect' power up condition can be disabled by adding a pulldown resistor on ON_OFF signal of typical 10 kOhm.

Once the system is ON, if the ON_OFF key is forced to V_RTC for minium T_off > 10 seconds, the system will switch OFF again.

After the initial startup procedure and when FW has booted, the ON_OFF key will be re-programmed to wake up the system when asserted during sleep mode.

Reproduction forbidden without written authorization from Telit Communications S.p.A. - All Rights Reserved.

6.1.2. Switching ON due to charging

If an external charger is detected the system startup procedure begins. An external charger can be detected by LOW level detection on CHG_POK and / or CHG_INT input pins. Both pins have an internal pullup applied to V_RTC. (See chapter 7.2 for charger IC connections)

6.1.3. Switching on due to RTC alarm

The real time clock can generate a wake-up signal called RTC alarm. Once the PMU detects this level high the system startup procedure begins.

6.2. Power off

There are two ways to trigger a power off cycle of the system.

6.2.1. Soft power off

Based on application specific implementation and/or user interaction, the SW can trigger a power off cycle.

6.2.2. Emergency power off

In case the PMU detects a HW failure, the PMU will shut down by itself.

The following events will trigger an emergency power off:

- PMU watchdog time-out
- ON_OFF key pressed for more than 10 sec
- ADC_VBATMEAS < threshold (default 2.3V)

  Overtemperature (refer to thermal design guide)

6.3. Reset

For soft reset, the system SW can trigger two types of soft reset.

One type will reset the DBB and go through the PMU power off/on sequence,

The other type will only reset the CPU while keeping voltage regulators enabled.

For hard reset, the system can be reset by pulling LGA pin AU5 “MAIN_RESET_IN” active LOW.

Reproduction forbidden without written authorization from Telit Communications S.p.A. - All Rights Reserved.

7. Battery management

The xE922-3GR chipset supports an (optional) complete battery management solution based on external charger IC interfacing by the following dedicated charging control lines.

PAD	Signal	I/O	descriptions	Type
AN14	CHG_RST_OUT	O	External Charger Reset	
AB21	CHG_INT_IN	I	Charger IRQ	
AN16	CHG_POK_IN	I	Charger Power OK indication	
AV16	FG_IBATP	I	Battery Fuel Gauge Positive	
AT16	FG_IBATN	I	Battery Fuel Gauge Negative	
AM19	ADC_VBATMEAS	I	Battery measurement ADC	
AC18	CHG_I2C_SCL	I/O	Charger I2C Clock	CMOS 1.8V
AE18	CHG_I2C_SDA	I/O	Charger I2C Data	CMOS 1.8V
AL18	ADC_IN0	AI	Analog to Digital converter (MEAS0 Batt ID)	Analog
AK19	ADC_IN1	AI	Analog to Digital converter (MEAS1 Batt Temp)	Analog

The battery management system foresees in the following main functions:

- Battery voltage/capacity monitoring (fuel gauge)
- Battery charger interface (I2C bus, predefined IO's)

7.1. Coulomb counter

The coulomb counter is a current integration method to improve the battery state of charge, while combined with VBATMEAS voltage monitoring. Below figure shows the required connections, where the biderectional battery current is sensed across a shunt resistor (low side sensing, typ. 20 mOhm).

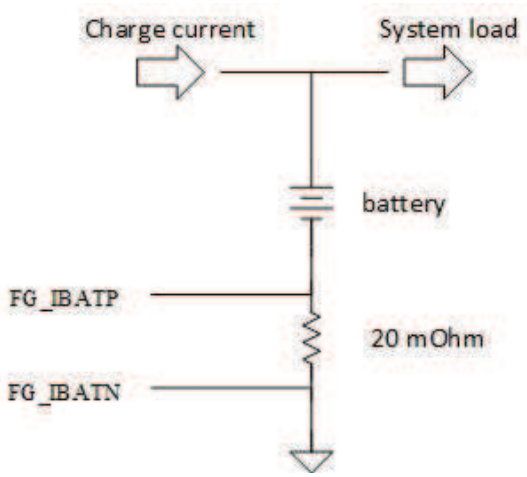

Always connect the sense resistor to the negative (ground) side of the battery. Positive side battery sensing is not supported and will damage the chip.

Reproduction forbidden without written authorization from Telit Communications S.p.A. - All Rights Reserved.

Minimize parasitic resistance in the current path by using thick copper traces between sense resistor and PCB ground and negative battery terminal respectively.

The fuel gauge FG_IBATP/N signal pair should be routed as differential and isolated from aggressors (like clocks, DC/DC switching nodes) to minimize noise interference.

A low pass filter 4.7k/1uF is present inside the xE922-3GR module.

When using 2-teminal resistor, apply 4-wire terminal layout pattern scheme as suggested in following figure.

4-Wire sensing using a 2-terminal resistor

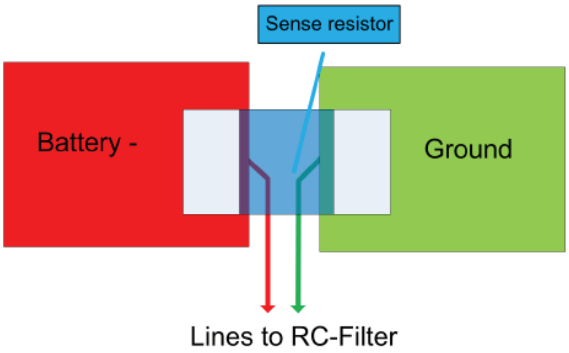

7.2. Battery charging

The system SW supports application of an external charger IC solution BQ24296 from Texas Instruments TI, an I2C controlled, 3A single cell, USB Charger. For detailed performance, please consult the datasheet.

Please consult Intel's IBL support website for application note and actual supported charger IC type numbers.

7.2.1. Block diagram

The below figure gives an overview how the BQ24296 solution should be interfaced with the onboard PMU/ABB/DBB functions.

Note: currently PSEL control from ABB is not supported. Charging from USB or DC-adapter is set by tying PSEL to HIGH or LOW respectively.

Reproduction forbidden without written authorization from Telit Communications S.p.A. - All Rights Reserved.

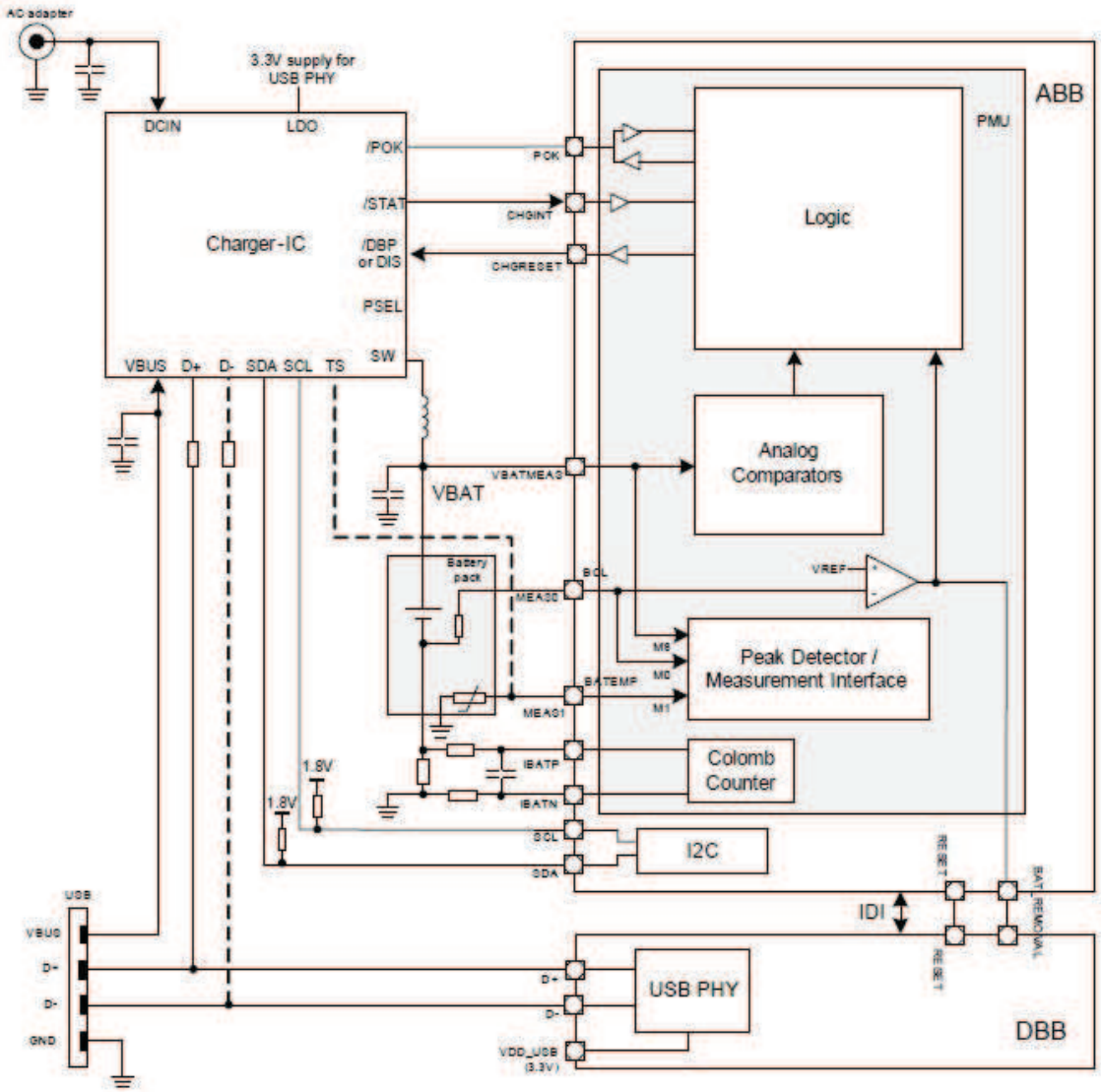

The CHG_POK line (active LOW, internal pullup to always_on domain V_RTC) wakes the system once a valid input supply source is present. It has the same effect as the ON_OFF key event to initiate a power-up sequence.

The CHG_INT line (active LOW, internal pullup to always_on domain V_RTC) signals charger state change or failure, and replaces, in case not used, the CHG_POK function.

The CHG_RESET will disable the external charger, in case of PMU reset or battery removal detect.

The CHG_I2C interface is used to control charging process parameters and charger status monitoring.

Reproduction forbidden without written authorization from Telit Communications S.p.A. - All Rights Reserved.

7.2.2. Battery/charger-less operation

In case the xE922-3GR module is applied directly from a DC source supply, without battery and/or external charger IC, the charger specific interface signals should be connected as indicated in the next picture.

Since VBATMEAS and POK signals are still used in the power on sequencing / boot process, it is important to have the following minimum connections implemented.

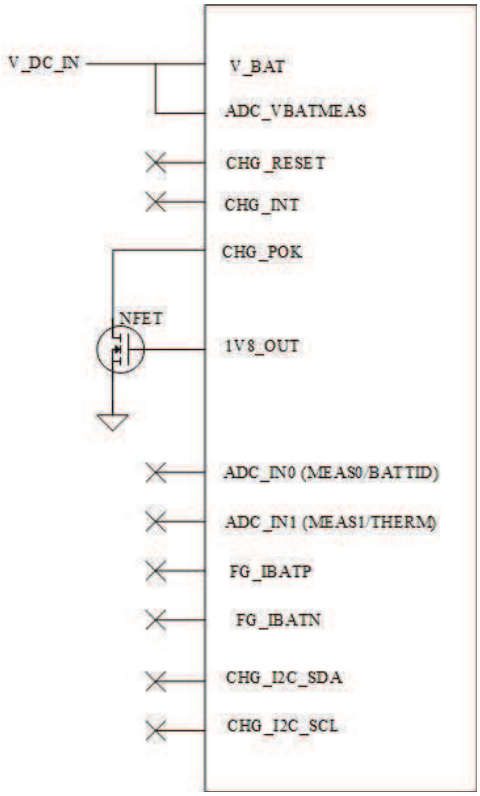

Reproduction forbidden without written authorization from Telit Communications S.p.A. - All Rights Reserved.

8. USIM interface

xE922-3GR supports two external USIM interfaces (dual volt 1.8/3V) compatible with ISO 7816-3 IC Card standard.

PAD	Signal	I/O	descriptions	Type
SIM card interface 1				
AM5	VSIM1	-	External SIM signal 1 – Power supply for the SIM	1.8 / 2.85V
AR6	SIMCLK1	O	External SIM signal 1 – Clock	1.8 / 2.85V
AN10	USIM1_DETECT	I	External SIM signal 1 – Card detect (Active low)	CMOS 1.8V
AT6	SIMIO1	I/O	External SIM signal 1 – Data I/O	1.8 / 2.85V
AN6	SIMRST1	O	External SIM signal 1 – Reset	1.8 / 2.85V
SIM card interface 2				
AK3	VSIM2	-	External SIM signal 2 – Power supply for the SIM	1.8 / 2.85V
AS7	SIMCLK2	O	External SIM signal 2 – Clock	1.8 / 2.85V
AR10	USIM2_DETECT	I	External SIM signal 2 – Card detect (Active low)	CMOS 1.8V
AU7	SIMIO2	I/O	External SIM signal 2 – Data I/O	1.8 / 2.85V
AP7	SIMRST2	O	External SIM signal 2 – Reset	1.8 / 2.85V

Next figure illustrates how a typical SIM socket should be connected.

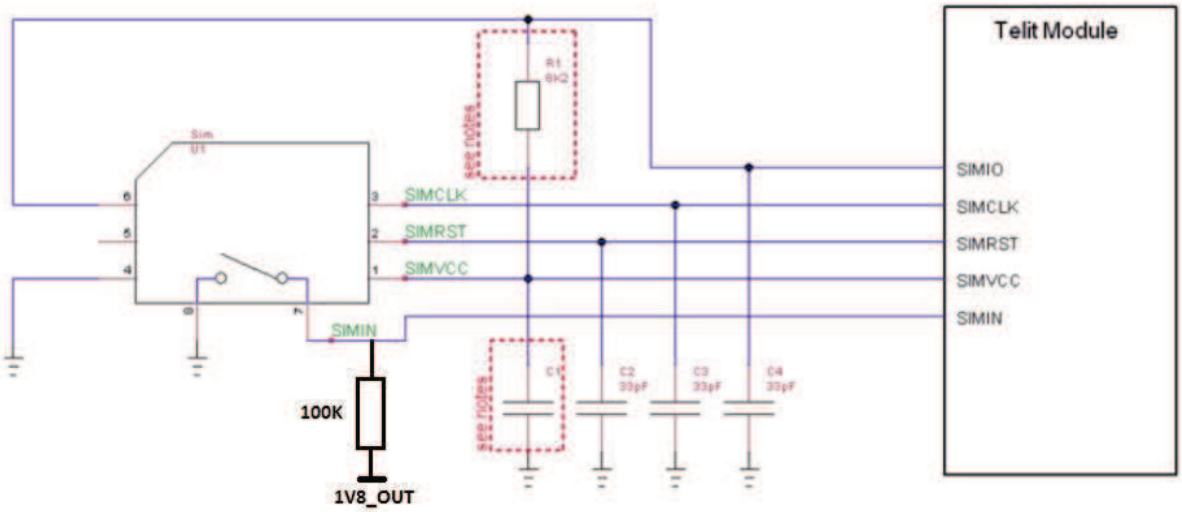

Reproduction forbidden without written authorization from Telit Communications S.p.A. - All Rights Reserved.

NOTE FOR R1:

The resistor value on SIMIO pulled up to SIMVCC should be defined accordingly in order to be compliant with 3GPP specification for USIM electrical testing. Rise/fall time of SIMIO line should not exceed 1 µs.

The xE922-3GR module contains an internal 4.7 kOhm pull-up resistor on SIMIO which should be sufficient in most applications.

For C1 a value of 1uF is recommended with the XE922-3GR product.

USIMx_DETECT line has no internal pull up activated, an external pullup resistor of typical 100 kOhm is required on the application main board.

Refer to the following document for more SIM integration recommendations:

- SIM_Integration_Design_Guide_Application_Note_Rev10, 80000nt10001a

Note1:

Only SIM1 interface is active by default.

Please consult Intel Business Link Support (IBL) how to activate SIM2 interface

Note2:

USIM_DETECT mechanism is not enabled by default.

SIM detection is currently implemented via SW polling.

Please consult Intel Business Link Support (IBL) on HW SIM detection.

Reproduction forbidden without written authorization from Telit Communications S.p.A. - All Rights Reserved.

9. USB port

The xE922-3GR module includes a Universal Serial Bus (USB) transceiver, which operates at USB high-speed (480Mbits/sec). It can also operate with USB full-speed (12Mbits/sec) hosts.

It is compliant with the USB 2.0 'DRD' dual role specification, 15 endpoints, and can be used control and data transfers as well as for diagnostic monitoring and firmware update.

The interface does not support 'OTG' (HNP) to switch roles on the fly.

Once the module enumerates as a device or host, it stays in that mode. The USB cable needs to be removed and reconnected to enumerate in the alternate mode.

The USB port on the Telit xE922-3GR is typically the main interface between the module and OEM hardware.

The USB_D+ and USB_D- signals have a clock rate of 480MHz in HS mode. The signal traces should be routed carefully. Trace lengths, number of vias and capacitive loading should be minimized. The impedance value should be as close as possible to 90 Ohms differential.

The table below describes the USB interface signals:

Signal	xE922-3GR Pad.	Usage
VBUS_DET	AR8	Power sense for the internal USB transceiver. Minimum high level detect level @ roomtemp: 2.9V
USB_D-	U17	Minus (-) line of the differential, bi-directional USB signal to/from the peripheral device
USB_D+	S17	Plus (+) line of the differential, bi-directional USB signal to/from the peripheral device
USB_ID	W17	ID pin to distinguish between host and device side for dual role DRD USB protocol
GPIO1_EINT2	AT8	Used for SoC USB ID WU from Sleep

For proper DRD operation USB_ID (W17) should be connected to GPIO1_EINT2 (AT18) to detect device connection in low power modes.

NOTE:

- VBUS_DET input power is internally used to detect cable VBUS (USB device attach) and start enumeration process. It is not used for supplying internal xE922-3GR USB HW block.

NOTE:

In the case of not using USB communication, it is still highly recommended to place an optional USB connector in the application board.

Reproduction forbidden without written authorization from Telit Communications S.p.A. - All Rights Reserved.

At least Test point of the USB signals are required since the USB physical communication is needed in the case of SW update.

Routing guide lines for the display USB2.0 interface:

The next figure shows a typical signal traject with different sub trajects.

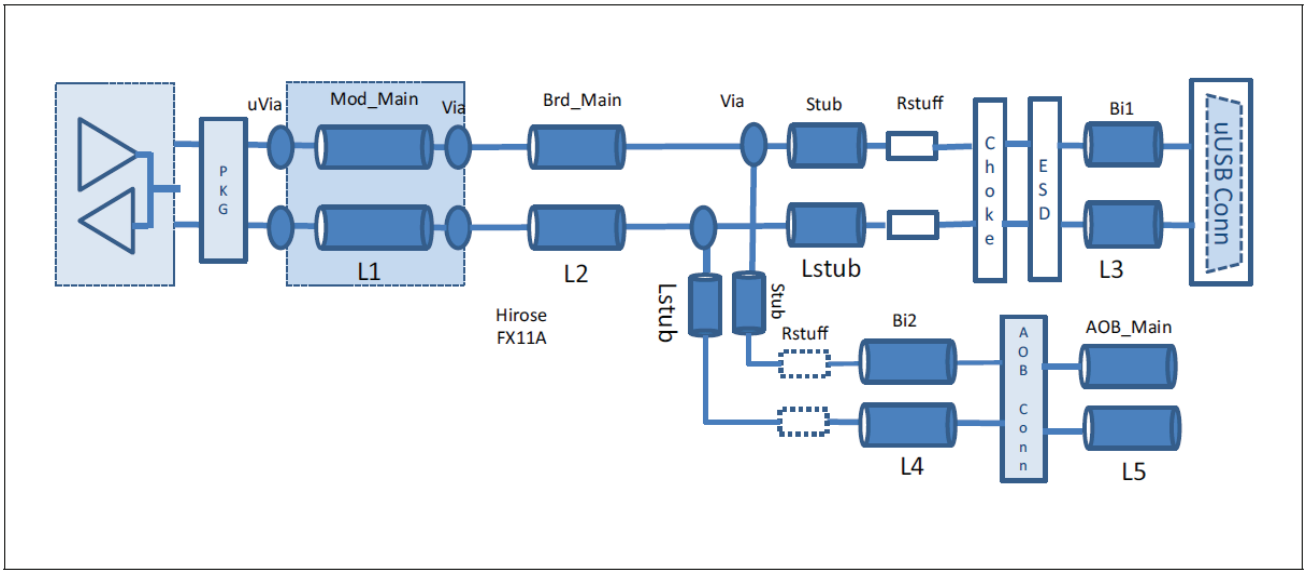

Recommended routing guidelines for the whole USB signal traject :

parameter	guideline
Characteristic impedance (stripline / microstrip)	90 ohm differential 10%(SL) 15%(MS)
Trace spacing : between differential pairs or between differential pair and other signals (h = dielectric height)	4xh (SL) 6xh (MS)
Max. number of vias allowed	3 through-hole vias + 4 microvias (including via under USB connector)
Length matching between P and N within a differential pair	Within same layer mismatch: +/-0.254 mm Total length mismatch: +/-0.381 mm

Reproduction forbidden without written authorization from Telit Communications S.p.A. - All Rights Reserved.

Guidelines for sub trajects:

parameter	module	main	Bi1	Bi2	AOB	stub
Transmission line segment	L1 (MS/SL)	L2 (SL)	L3 (MS)	L4 (MS)	L5(SL)	Lstub
Max. length [mm]	25.4	101.6	12.7	25.4	101.6	5.1

Actual xE922-3GR module signal trace (L1) implementation:

signal name	module trace length [mm]	Number of microvias on the module
USB_DP	5.06	3
USB_DN	5.29	3

Reproduction forbidden without written authorization from Telit Communications S.p.A. - All Rights Reserved.

10. Display interface

The xE922-3GR supports a display according following 3 interface types:

- MIPI-DSI (4-lane, GPIO's including tearing effect timing control)
- LVDS (4-lane)

On top of this display interface the module also features backlight control (CABC input, BL feedback input, BL drive output) and I2C port to control a touch panel IC.

LCD_RESET and LCD_TE interface pins become available as general GPIO function in case no LCD feature implemented in the system.

Please consult Intel's IBL Support website for AVL (approved vendor list), as well for recommended implementation and port assignment

10.1. MIPI-DSI

4-lane MIPI DSI compliant, utilizing MIPI DPHY as physical layer.
Max rate of bit clock of a DPHY lane is defined as 400MHz, or equivalent data rate 800Mbps.

PAD	Signal	I/O	descriptions	Type
MIPI DSI Display Interface				
S19	DSI_DP0	AO	LCD DSI Data_0 Positive	Analog
P19	DSI_DN0	AO	LCD DSI Data_0 Negative	Analog
R20	DSI_DP1	AO	LCD DSI Data_1 Positive	Analog
N20	DSI_DN1	AO	LCD DSI Data_1 Negative	Analog
L20	DSI_DP2	AO	LCD DSI Data_2 Positive	Analog
J20	DSI_DN2	AO	LCD DSI Data_2 Negative	Analog
K21	DSI_DP3	AO	LCD DSI Data_3 Positive	Analog
H21	DSI_DN3	AO	LCD DSI Data_3 Negative	Analog
M21	DSI_CLKP	AO	LCD DSI Clock Positive	Analog
P21	DSI_CLKN	AO	LCD DSI Clock Negative	Analog
AP11	LCD_RESET	I/O	LCD Reset / GPIO	CMOS 1.8V
AP9	LCD_TE	I/O	LCD Tearing effect input	CMOS 1.8V

Routing guide lines for the display MIPI-DSI interface:

The next figure shows a typical signal traject with different sub trajects.

Reproduction forbidden without written authorization from Telit Communications S.p.A. - All Rights Reserved.

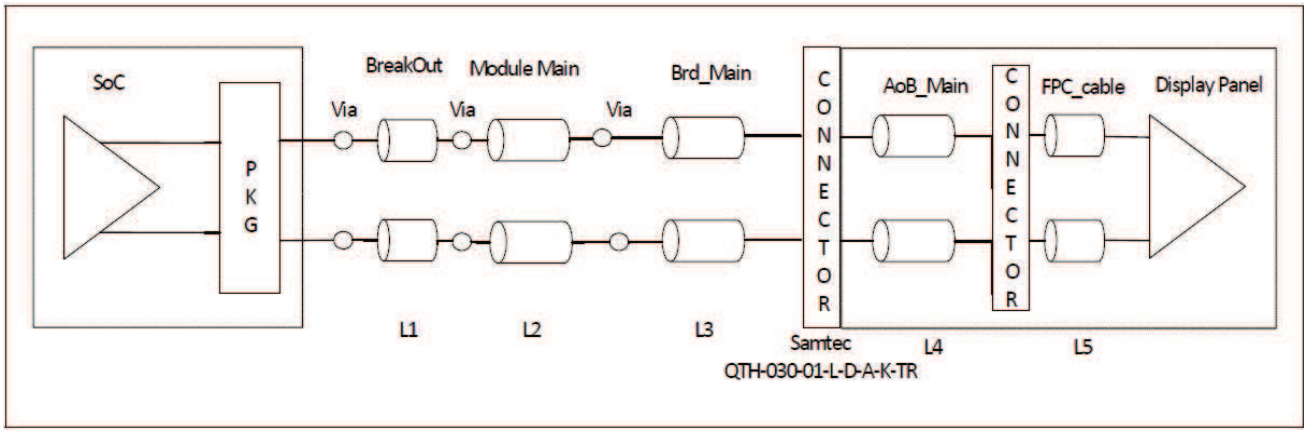

Recommended routing guidelines for the whole MIPI-DSI signal traject:

parameter	guideline
Characteristic impedance (stripline / microstrip)	100 ohm differential 10%(SL) 15%(MS)
Trace spacing : between differential pairs or between differential pair and other signals (h = dielectric height)	5xh (SL) 7xh (MS)
Total length (module (L1+L2) + carrier(L3)+add-on pcb(L4) + FPC cable(L5))	Min. 50.8 mm / Max. 152.4 mm (MS/SL)
Max. number of vias allowed	4 through-hole vias + 4 microvias + 2 connector pins
Length matching between P and N within a differential pair	Within same layer mismatch: +/-0.254 mm Total length mismatch: +/-0.381 mm
Length matching between DATA to CLK	Within same layer mismatch : +/- 1.27 mm Total length mismatch: +/- 2.54 mm

Guidelines for off-module sub trajects:

parameter	Carrier board	Addon board	FPC cable
Transmission line segment	L3	L4	L5
Length [mm]	50.8 - 83.8 (MS/SL)	12.7 - 25.4 (MS)	50.8 - 127

Reproduction forbidden without written authorization from Telit Communications S.p.A. - All Rights Reserved.

Actual xE922-3GR module signal trace (L1+L2) implementation:

signal name	module trace length [mm]	Number of microvias on the module
DSI_CLKN	9.88	2
DSI_CLKP	9.65	2
DSI_DN0	7.39	2
DSI_DP0	7.15	2
DSI_DN1	9.09	2
DSI_DP1	9.28	2
DSI_DN2	8.60	2
DSI_DP2	8.43	2
DSI_DN3	12.16	2
DSI_DP3	12.01	2

10.2. LVDS

4-lane 'Low voltage differential signaling' LVDS transmitter, implementing the LVDS PHY with electrical parameters according TIA/EIA-644 technical standard.

LVDS Clock range: 20 – 170 MHz.

PAD	Signal	I/O	descriptions	Type
LVDS Display Interface				
W19	LVDS_TA1P	AO	LVDS Data A Positive	Analog
U19	LVDS_TA1N	AO	LVDS Data A Negative	Analog
X18	LVDS_TB1P	AO	LVDS Data B Positive	Analog
V18	LVDS_TB1N	AO	LVDS Data B Negative	Analog
V20	LVDS_TC1P	AO	LVDS Data C Positive	Analog
T20	LVDS_TC1N	AO	LVDS Data C Negative	Analog
Y21	LVDS_TD1P	AO	LVDS Data D Positive	Analog
W21	LVDS_TD1N	AO	LVDS Data D Negative	Analog
U21	LVDS_TCLK1P	AO	LVDS Clock Positive	Analog

Reproduction forbidden without written authorization from Telit Communications S.p.A. - All Rights Reserved.

S21	LVDS_TCLK1N	AO	LVDS Clock Negative	Analog

Routing guide lines for the display LVDS interface:

The next figure shows a typical signal traject with different sub trajects.

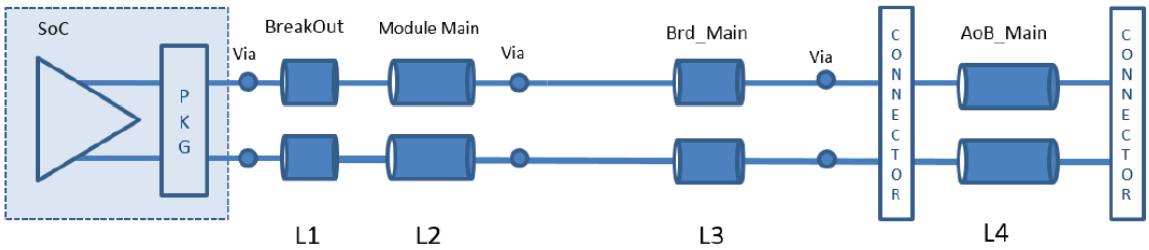

Recommended routing guidelines for the whole LVDS signal traject:

parameter	guideline
Characteristic impedance (stripline / microstrip)	100 ohm differential 10%(SL) 15%(MS)
Trace spacing : between differential pairs or between differential pair and other signals (h = dielectric height)	5xh (SL) 7xh (MS)
Total length (module (L1+L2) + carrier(L3)+add-on pcb(L4))	Min. 50.8 mm / Max. 203.2 mm (MS/SL)
Max. number of vias allowed	4 through-hole vias + 4 microvias + 2 connector pins
Length matching between P and N within a differential pair	Within same layer mismatch: +/-0.254 mm Total length mismatch: +/-0.381 mm
Length matching between DATA to CLK	Within same layer mismatch : +/- 1.27 mm Total length mismatch: +/- 2.54 mm

Reproduction forbidden without written authorization from Telit Communications S.p.A. - All Rights Reserved.

Guidelines for off-module sub trajects:

parameter	Carrier board	Addon board
Transmission line segment	L3	L4
Length [mm]	82.5 (MS/SL)	Max. 203.2 – (L1+L2+L3)

Actual xE922-3GR module signal trace (L1+L2) implementation:

signal name	module trace length [mm]	Number of microvias on the module
LVDS_TCLK1N	10.47	2
LVDS_TCLK1P	10.46	2
LVDS_TA1N	9.12	2
LVDS_TA1P	9.31	2
LVDS_TB1N	8.25	2
LVDS_TB1P	8.51	2
LVDS_TC1N	8.16	2
LVDS_TC1P	7.99	2
LVDS_TD1N	12.64	2
LVDS_TD1P	12.46	2

10.3. Backlight control

PAD	Signal	I/O	descriptions	Type
LCD Backlight				
AS15	CABC	AI	Content Adaptive Backlight Control	Analog
AS17	LEDFB_DP	AI	Backlight feedback Positive	Analog
AU17	LEDFB_DN	AI	Backlight feedback Negative	Analog
AP13	LEDDRV	AO	Backlight Drive	Analog

The LED current generator feature can generate supply current for display or keypad backlight LED's

Reproduction forbidden without written authorization from Telit Communications S.p.A. - All Rights Reserved.

A typical application of the backlight control is drawn in below figure .

LEDDRV controls the gate of an external NFET with PWM signal.

During first time period t1 the inductor L is charged via the n-channel FET closed , while during second period t2 the inductor L is discharged via the parallel LED's.

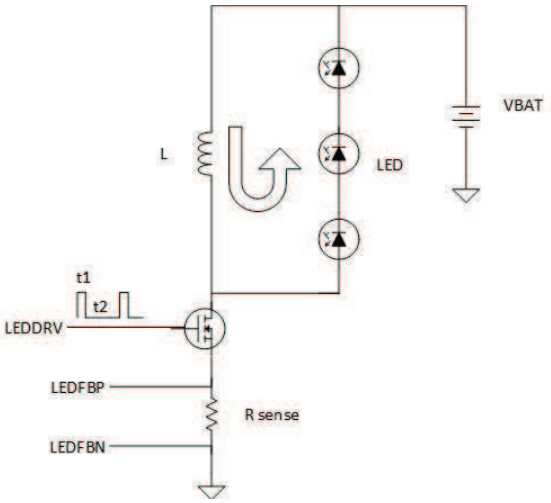

CABC = Content Adaptive Backlight Control input from external backlighting control IC.

In order to keep the 'perceived' brightness the same, the brightness of the LED backlight can be dimmed while increasing the light shining through the LCD filter. When CABC operation is enabled, the LEDDRV PWM is kept low/disabled when the CABC signal is low.

This way the backlight power consumption can be reduced.

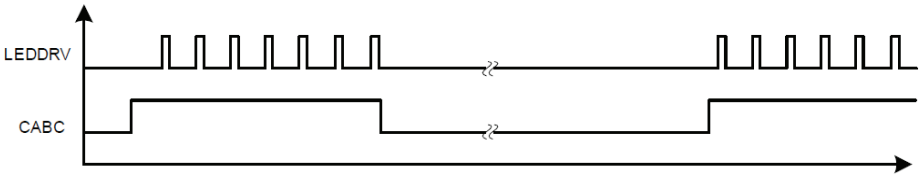

Please consult the appropriate application note on Intel's IBL support website.

10.4. LED_CURSINK

PAD	Signal	I/O	descriptions	Type
AR14	LED_CURSINK	I	GP LED Driver (Sink)	Analog

The LED_CURSINK features a programmable (in steps of 2mA) current sink up to 40mA, typically used for LED keypad backlighting.

Reproduction forbidden without written authorization from Telit Communications S.p.A. - All Rights Reserved.

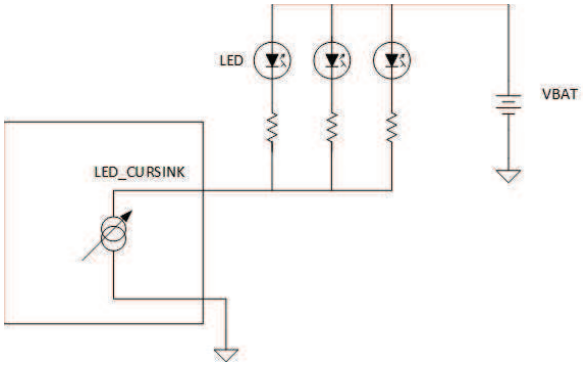

10.5. Touch panel

PAD	Signal	I/O	descriptions	Type
Touch Screen interface				
AD17	TP_SDA	I/O	Touch panel I2C Data	CMOS 1.8V
AB17	TP_SCL	I/O	Touch panel I2C Clock	CMOS 1.8V
F7	TP_RESET	I/O	Touch panel Reset	CMOS 1.8V
F11	TP_IRQ	I/O	Touch panel Interrupt	CMOS 1.8V

A dedicated I2C bus and control lines are foreseen to interface with an external touch panel control IC.
Besides touch panel interface, this I2C bus can also be applied for display EDID retrieval at boot time.
In case touch panel is not used, the above signals can be used as GPIO's, interrupts or general purpose I2C.

Reproduction forbidden without written authorization from Telit Communications S.p.A. - All Rights Reserved.

11. Camera interface

The xE922-3GR module offers two CIF camera interfaces.

MIPI CSI-2 compliant, utilizing MIPI DPHY as physical layer.
Max rate of bit clock of a DPHY lane is defined as 500MHz, or equivalent datarate 1Gbps.
Atom x3 chipset ISP throughput limited to max 221Mpix/sec
Please consult Intel's IBL Support website for AVL (approved vendor list), as well for recommended implementation and port assignment

PAD	Signal	I/O	descriptions	Type
Main Camera				
D21	CSI1_DP0	AI	Main Camera CSI Data0 Input Positive	Analog
F21	CSI1_DN0	AI	Main Camera CSI Data0 Input Negative	Analog
M19	CSI1_DP1	AI	Main Camera CSI Data1 Input Positive	Analog
K19	CSI1_DN1	AI	Main Camera CSI Data1 Input Negative	Analog
F19	CSI1_DP2	AI	Main Camera CSI Data2 Input Positive	Analog
H19	CSI1_DN2	AI	Main Camera CSI Data2 Input Negative	Analog
E18	CSI1_DP3	AI	Main Camera CSI Data3 Input Positive	Analog
G18	CSI1_DN3	AI	Main Camera CSI Data3 Input Negative	Analog
C20	CSI1_CLKP	AI	Main Camera CSI Clock Positive	Analog
E20	CSI1_CLKN	AI	Main Camera CSI Clock Negative	Analog
P17	CAM_MCLK	O	Camera MCLK output	CMOS 1.8V
AM17	CAM_I2C_SDA	I/O	Camera I2C Data	CMOS 1.8V
AP17	CAM_I2C_SCL	I/O	Camera I2C Clock	CMOS 1.8V
A4	CAM1_PD	I/O	Main Camera Power Down / GPIO	CMOS 1.8V
G4	CAM1_RESET	I/O	Main Camera Reset / GPIO	CMOS 1.8V
B7	CAM1_FLASH	I/O	Main Camera Flash Triger	CMOS 1.8V
G6	CAM1_TORCH	I/O	Main Camera Torch Enable	CMOS 1.8V
Secondary Camera				
A18	CSI2_DP	AI	Sub Camera CSI Data Input Positive	Analog
C18	CSI2_DN	AI	Sub Camera CSI Data Input Negative	Analog
B19	CSI2_CLKP	AI	Sub Camera CSI Clock Positive	Analog
D19	CSI2_CLKN	AI	Sub Camera CSI Clock Negative	Analog
H3	CAM2_PD	I/O	Sub Camera Power Down / GPIO	CMOS 1.8V
E4	CAM2_RESET	I/O	Sub Camera Reset / GPIO	CMOS 1.8V
Camera power supply				
AA18	VAUX_1P8V	-	Camera/Auxiliary 1.8V power supply	POWER
AH17	VAUX_2P85V	-	Camera/Auxiliary power supply 1 (2.85V)	POWER

Reproduction forbidden without written authorization from Telit Communications S.p.A. - All Rights Reserved.

Main camera:

- High resolution up to 13Mpixel /15 fps
- 4-lane MIPI CSI-2
- up to 550Mbps/lane data rate (limited by ISP throughput)

Secondary camera:

- Low resolution up to 5Mpixel
- 1-lane MIPI CSI-2
- up to 1Gbps/lane data rate

The cameras cannot be used simultaneously, only 1 at the time.
A dedicated CAM_I2C bus interfaces is featured to control the CMOS camera devices (external pullup resistors to VAUX_1P8V required), as well as CAM_RESET and CAM_PD control pins for each CIF interface.
The reference clock CAM_MCLK frequency is max 26MHz.

CAM1_FLASH and _TORCH enable flash and torch resp. of main camera.

In case the Camera interface is not used, the above signals can be used as GPIO's, interrupts or general purpose I2C (in that case add external pullup resistors to 1V8_OUT)

Two voltage regulators can be used for camera device supply:
- VAUX_1P8V
- VAUX_2P85V

Both have a current rating of max 225mA.

Typically 1uF external decoupling capacitance to be added (additional to internal 1uF).
In case not applied for camera supply, both regulators can be used for other purpose.

Routing guide lines for the display MIPI-CSI-2 interface:

The next figure shows a typical signal traject with different sub trajects.

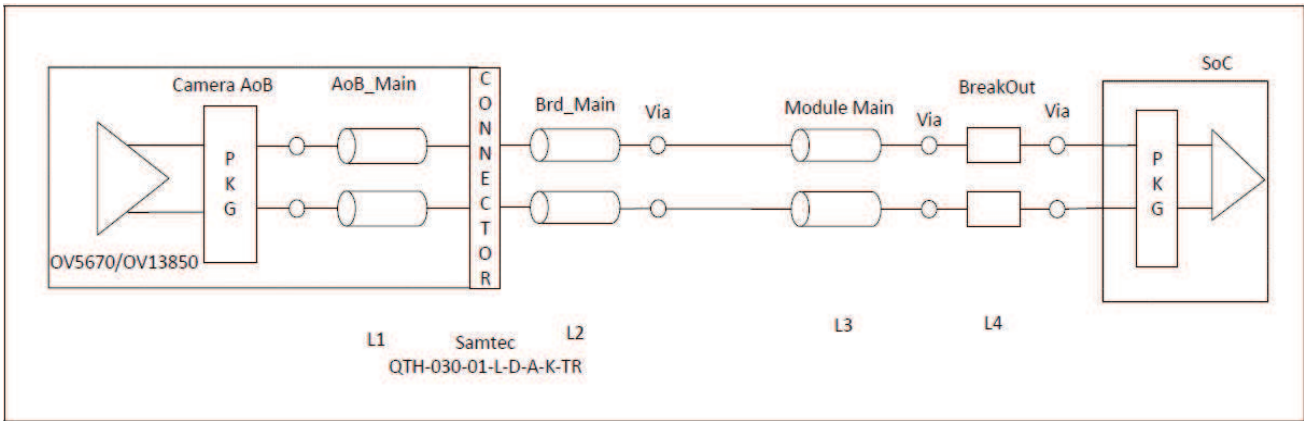

Reproduction forbidden without written authorization from Telit Communications S.p.A. - All Rights Reserved.

Recommended routing guidelines for the whole MIPI-CSI-2 signal traject :

parameter	guideline
Characteristic impedance (stripline / microstrip)	100 ohm differential 10%(SL) 15%(MS)
Trace spacing : between differential pairs or between differential pair and other signals (h = dielectric height)	5xh (SL) 7xh (MS)
Total length (add-on pcb (L1)+ carrier (L2)+ (module (L3+L4))	Min. 45.7 mm / Max. 203.2 mm (MS/SL)
Max. number of vias allowed	2 through-hole vias + 3 microvias + 2 connector pins
Length matching between P and N within a differential pair	Within same layer mismatch: +/-0.254 mm Total length mismatch: +/-0.381 mm
Length matching between DATA to CLK	Within same layer mismatch : +/- 1.27 mm Total length mismatch: +/- 2.54 mm

Guidelines for off-module sub trajects:

parameter	Addon board	Carrier board
Transmission line segment	L1	L2
Length [mm]	12.7 – 63.5 (MS)	12.7 – 88.9 (MS/SL)

Actual xE922-3GR module signal trace (L3+L4) implementation:

signal name	module trace length [mm]	Number of microvias on the module
CSI1_CLKN	9.99	2
CSI1_CLKP	9.79	2
CSI1_DN0	10.97	2
CSI1_DP0	11.22	2
CSI1_DN1	7.26	2

Reproduction forbidden without written authorization from Telit Communications S.p.A. - All Rights Reserved.

CSI1_DP1	7.48	2
CSI1_DN2	7.77	2
CSI1_DP2	7.52	2
CSI1_DN3	7.31	2
CSI1_DP3	7.26	2

signal name	module trace length [mm]	Number of microvias on the module
CSI2_CLKN	10.04	2
CSI2_CLKP	10.26	2
CSI2_DN	10.46	2
CSI2_DP	10.7	2

Reproduction forbidden without written authorization from Telit Communications S.p.A. - All Rights Reserved.

12. Peripheral interfaces

12.1. I2C

The xE922-3GR offers in total four I2C bus interfaces.

1V8 IO, standard/fast mode SCLK 100 kHz/400 kHz.

The below table gives an overview and indicates the assigned functions that are 'reserved' for each I2C bus port.

PAD	Signal	I/O	descriptions	Type
AM17	CAM_I2C_SDA	I/O	Camera I2C Data	CMOS 1.8V
AP17	CAM_I2C_SCL	I/O	Camera I2C Clock	CMOS 1.8V
AD17	TP_SDA	I/O	Touch panel I2C Data	CMOS 1.8V
AB17	TP_SCL	I/O	Touch panel I2C Clock	CMOS 1.8V
AC18	CHG_I2C_SCL	I/O	Charger I2C Clock	CMOS 1.8V
AE18	CHG_I2C_SDA	I/O	Charger I2C Data	CMOS 1.8V
AS1	AUX_I2C_SDA	I/O	I2C3 Data (AUX / Sensors)	CMOS 1.8V
AT2	AUX_I2C_SCL	I/O	I2C3 Clock (AUX / Sensors)	CMOS 1.8V

- CAM_I2C signal lines need external 2.2k pullup resistors to VAUX_1P8V.
- TP_/CHG_/AUX_ I2C signal lines have internal 2.2k pullup resistors to 1V8_OUT

Care should be taken to limit the total bus load capacitance to meet maximum rise time requirement of 300ns (fast-mode) or 1 µs (standard-mode).

None of these I2C bus ports are connected internal the module to other peripherals.

In case not applied for the reserved functions, the camera and touch panel I2C busses can be applied for general use case. In that case CAM_I2C signal lines should be pulled up to 1V8_OUT.

The charger I2C interface is dedicated and cannot be used for other purpose

Reproduction forbidden without written authorization from Telit Communications S.p.A. - All Rights Reserved.

12.2. USIF

xE922-3GR offers two 'Universal Serial Interface' ports, configurable either as SPI or UART

- USIF1 :SPI (up to 48MHz) / UART
- USIF2 :SPI (up to 26MHz) / UART

PAD	Signal	I/O	descriptions	Type
USIF 1 (UART/SPI)				
W5	USIF1_RXD	I	UART1 / SPI1 Serial data input	CMOS 1.8V
Y5	USIF1_TXD	O	UART1 / SPI1 Serial data Output	CMOS 1.8V
S5	USIF1_SCLK	I/O	UART1 RTS / SPI1 SCLK	CMOS 1.8V
U5	USIF1_CS	O	UART1 CTS / SPI1 Chip Select	CMOS 1.8V
USIF 2 (UART/SPI)				
AH3	USIF2_RXD	I	UART2 / SPI2 Serial data input	CMOS 1.8V
AE4	USIF2_TXD	O	UART2 / SPI2 Serial data Output	CMOS 1.8V
AD5	USIF2_SCLK	I/O	UART2 CTS / SPI2 SCLK	CMOS 1.8V
AJ2	USIF2_CS	O	UART2 RTS / SPI2 Chip Select	CMOS 1.8V

Remark:
USIF1 pinning is also multiplexed with an optional digital audio I2S interface bus (refer to audio chapter).

<u>Routing guide lines for the USIF interface (SPI mode):</u>

Recommended routing guidelines for the whole USIF signal traject:

parameter	guideline
Characteristic impedance (stripline / microstrip)	50 ohm single ended 10%(SL) 15%(MS)
Trace spacing : between differential pairs or between differential pair and other signals (h = dielectric height)	2xh (SL) 3xh (MS)
Total length (module (L1) + carrier(L2))	Min. 5.1 mm / Max. 330.2 mm (MS/SL)
Max. number of vias allowed	4 through-hole vias + 4 microvias
Length matching between DATA to CLK	Total length mismatch: +/- 12.7 mm

Reproduction forbidden without written authorization from Telit Communications S.p.A. - All Rights Reserved.

Actual xE922-3GR module signal trace (L1) implementation USIF1:

signal name	module trace length [mm]	Number of microvias on the module
USIF1_SCLK	24.8	3
USIF1_RXD	20.8	3
USIF1_TXD	20.2	3
USIF1_CS	22.2	3

Actual xE922-3GR module signal trace (L1) implementation USIF2:

signal name	module trace length [mm]	Number of microvias on the module
USIF2_SCLK	60.8	3
USIF2_RXD	59.2	3
USIF2_TXD	59.4	3
USIF2_CS	58.7	3

Reproduction forbidden without written authorization from Telit Communications S.p.A. - All Rights Reserved.

12.3. SDMMC/SDIO

SDIO: SD 3.0, 1x 4bit, speed up to DDR50 (clk 48MHz) / SDR50 (clk 96MHz), only 1.8V supported

SDMMC: SD 3.0, 1x 4bit, default mode 26MHz, including power supply VDD_SD (fixed to 2.9V) and card detect

Note:

In case SDMMC 1.8V support is needed, an external 3.0V voltage regulator should be added (ENABLE pin controlled by VDD_SD line), to supply card VDD pin of the card holder.

PAD	Signal	I/O	descriptions	Type
SD/MMC Card Interface				
AP15	VDD_SD	-	Power supply out for SDMMC card	2.9V
J2	SD_CARD_DET	I	MMC card detect(active low)	CMOS_1.8V
F1	SD_DAT0	I/O	MMC card data 0	CMOS_1.8/3V
H1	SD_DAT1	I/O	MMC card data 1	CMOS_1.8/3V
K1	SD_DAT2	I/O	MMC card data 2	CMOS_1.8/3V
M1	SD_DAT3	O	MMC card data3	CMOS_1.8/3V
E2	SD_CLK	O	MMC card clock	CMOS_1.8/3V
G2	SD_CMD	I/O	MMC card command	CMOS_1.8/3V
SDIO Interface				
L4	SDIO_CLK	I/O	CLK	CMOS 1.8V
P3	SDIO_CMD	I/O	CMD	CMOS 1.8V
P1	SDIO_DAT0	I/O	SD0	CMOS 1.8V
N2	SDIO_DAT1	I/O	SD1	CMOS 1.8V
M3	SDIO_DAT2	I/O	SD2	CMOS 1.8V
N4	SDIO_DAT3	I/O	SD3	CMOS 1.8V

Reproduction forbidden without written authorization from Telit Communications S.p.A. - All Rights Reserved.

A typical diagram for SDMMC card connection is shown in below figure.

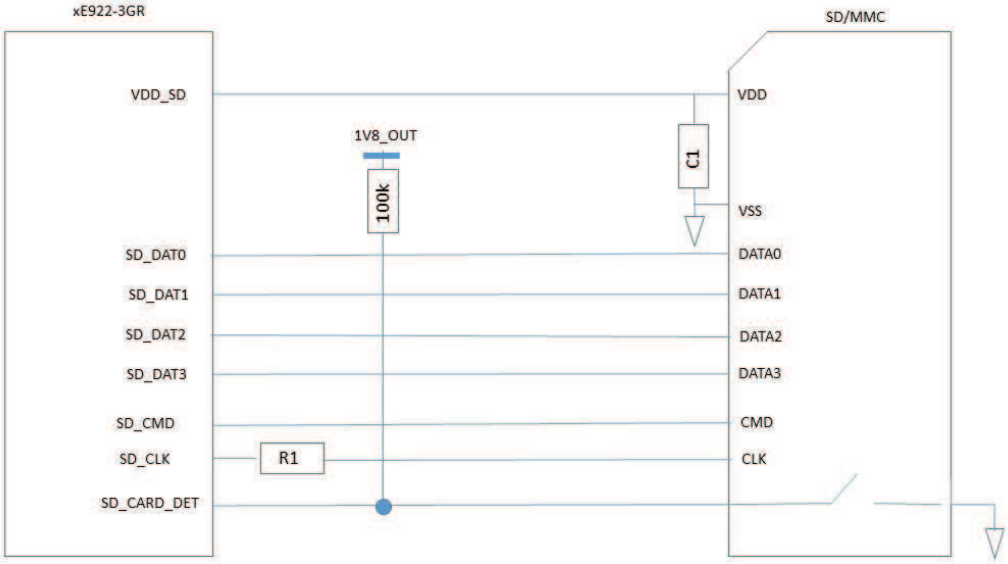

Series resistor R1 place holder is recommended for tuning high speed CLK signal, typ.27 Ohm.

Internal regulator VDD_SD supports dual voltage level 2.9V (default)/1.8V, with current rating max 255 mA.

Maximum decoupling capacitance C1 is up to 5 uF (including the internal 1uF decoupling already present).

In case ESD protection to be applied, use high speed device < 2pF.

<u>Routing guide lines for the display SDMMC/SDIO interface:</u>

The next figure shows a typical signal traject with different sub trajects.

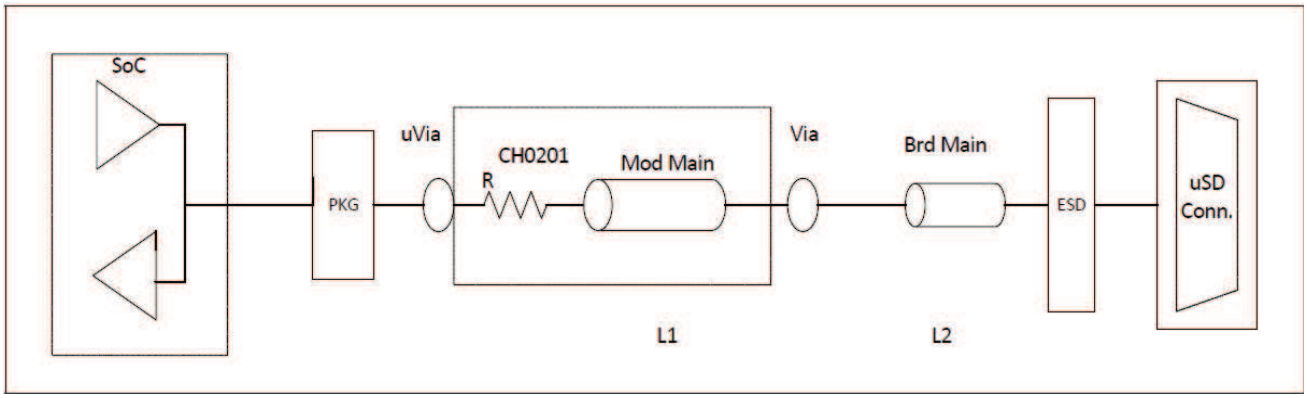

Reproduction forbidden without written authorization from Telit Communications S.p.A. - All Rights Reserved.

Recommended routing guidelines for the whole SDMMC/SDIO signal traject:

parameter	guideline
Characteristic impedance (stripline / microstrip)	50 ohm single ended 10%(SL) 15%(MS)
Trace spacing (h = dielectric height)	2xh (SL) 3xh (MS)
Total length (module (L1) + carrier(L2))	Min. 12.7 mm / Max. 88.9 mm (MS/SL)
Max. number of vias allowed	4 through-hole vias + 3 microvias
Length matching between DATA/CMD to CLK	Within same layer mismatch : +/- 1.27 mm Total length mismatch: +/- 2.54 mm
Termination resistors (Note: no series resistors implemented on xE922-3GR module side)	Rseries on CLK is 27 ohm +/-10%, and on DAT 39 ohm +/-10%. The series resistor placeholder should be close to module CLK, DATA and CMD lanes. Use of the resistor is to improve signal quality .Based on validation data, resistor can be removed or retained on the board

Actual xE922-3GR module signal trace (L1) implementation:

signal name	module trace length [mm]	Number of microvias on the module
SDIO_CLK	18.81	3
SDIO_CMD	18.40	5
SDIO_DAT0	19.85	3
SDIO_DAT1	18.39	4
SDIO_DAT2	17.65	4
SDIO_DAT3	17.62	4

Reproduction forbidden without written authorization from Telit Communications S.p.A. - All Rights Reserved.

signal name	module trace length [mm]	Number of microvias on the module
SD_CLK	37.86	4
SD_CMD	37.26	4
SD_DAT0	37.79	4
SD_DAT1	36.54	4
SD_DAT2	35.72	4
SD_DAT3	36.49	4

12.4. ADC

xE922-3GR offers in total three ADC input lines:

PAD	Signal	I/O	descriptions	Type
AM19	ADC_VBATMEAS	I	Battery measurement ADC	Analog
AL18	ADC_IN0	AI	Analog to Digital converter 1 (Batt ID)	Analog
AK19	ADC_IN1	AI	Analog to Digital converter 2 (Batt Temp)	Analog

When the system implements an external battery charger IC circuitry, the above pin description explains the reserved usage in that case. When no charger IC is implemented, ADC_IN0 and _IN1 can be used for general purpose ADC input.
ADC_VBATMEAS still needs to be applied at the main supply pin V_BAT of the module in order to properly boot the system.

ADC_INx properties:

- resolution : 12 bit
- input voltage range : 0V … 1.2V (for ADC_IN0/1)
- input resistance: minimum 1 MOhm

Reproduction forbidden without written authorization from Telit Communications S.p.A. - All Rights Reserved.

13. General purpose I/O

The following table gives an overview of the xE922-3GR pins that are 'suggested' for general purpose I/O use case:

PAD	Signal	I/O	descriptions	Type	Reset state
AV8	GPIO0_EINT5	I/O	GPIO / External IRQ	CMOS 1.8V	T/PD
AT8	GPIO1_EINT2	I/O	GPIO / External IRQ, Used for SoC USB ID WU from Sleep	CMOS 1.8V	T/PD
AS11	GPIO5_EINT7	I/O	GPIO / USB_FAULT IRQ	CMOS 1.8V	T/PD
G10	GPIO44	I/O	GPIO	CMOS 1.8V	T/PD
E10	GPIO45	I/O	GPIO	CMOS 1.8V	T/PD
A10	GPIO46	I/O	GPIO	CMOS 1.8V	T/PD
H9	GPIO47	I/O	GPIO	CMOS 1.8V	T/PD
F9	GPIO48	I/O	GPIO	CMOS 1.8V	T/PD
B9	GPIO49	I/O	GPIO	CMOS 1.8V	T/PD
G8	GPIO50	I/O	GPIO	CMOS 1.8V	T/PD
E8	GPIO51	I/O	GPIO	CMOS 1.8V	T/PD
A8	GPIO52_EINT15	I/O	GPIO / External IRQ	CMOS 1.8V	T/PD
H17	GPIO53	I/O	GPIO / MIPI Trace Clock	CMOS 1.8V	T/PD
K5	GPIO54_EINT1	I/O	GPIO / External IRQ	CMOS 1.8V	T/PD
G14	GPIO55_EINT15	I/O	GPIO / External IRQ	CMOS 1.8V	T/PD
H7	GPIO56	I/O	GPIO	CMOS 1.8V	T/PD
B11	GPIO57_EINT9	I/O	GPIO / External IRQ	CMOS 1.8V	T/PD
D11	GPIO58_EINT2	I/O	GPIO / External IRQ	CMOS 1.8V	T/PD
E6	GPIO63_EINT8	I/O	GPIO / External IRQ	CMOS 1.8V	T/PD
A6	GPIO64_EINT13	I/O	GPIO / External IRQ	CMOS 1.8V	T/PD
H5	GPIO65	I/O	GPIO	CMOS 1.8V	T/PD
F5	GPIO66_EINT15	I/O	GPIO / External IRQ	CMOS 1.8V	T/PD
B5	GPIO67_EINT0	I/O	GPIO / External IRQ	CMOS 1.8V	T/PD
F3	GPIO72_EINT9	I/O	GPIO / External IRQ	CMOS 1.8V	T/PD
B3	GPIO73_EINT10	I/O	GPIO / External IRQ	CMOS 1.8V	T/PD

As indicated in the table some of these GPIO's can be configured for external interrupt /wake up (edge, level detect). The optional GPIO's defined for camera or display control, in case not applied, can also be applied for general use case.

Reproduction forbidden without written authorization from Telit Communications S.p.A. - All Rights Reserved.

Each SoC pad's characteristics are controlled by a peripheral called PCL (Port Control Logic).
In the next page table a 'complete' overview of all PCL muxing options for 'all DBB pins externally available' on the xE922-3GR module LGA pinout is detailed out.
In order to clarify the correspondence between the module's pin naming and chip set supplier documentation naming convention, the DBB SoC BGA ball pin /signal names as well as xE922-3GR LGA pin number / signal names are indicated in different columns.
Yellow color code highlights the xE922-3GR module's intentional target use.
Note:
Please note GPIO2_EINT4 is applicable as "input only" because of internal level shift circuitry to accommodate for 5V VBUS_USB level detect.

Please consult Intel Business Link Support (IBL) for detailed info (like SW user guide) how to program the GPIO configuration/multiplex for your specific application.

Each pad has following characteristics indicated:

Pad pull class: This is the pull-up and pull-down strength of the pad that can be enabled/disabled using PCL registers. There are three pull classes of pads on 1.8V IO domain, A, B, and D (C is not used). A is the strongest (PU=155uA typ, PD=135uA Typ), B is medium (PU=80.8uA typ, PD=64uA typ) and D is the weakest (PU=16.4uA typ, PD=16.2uA typ). Pull-up/pull-down can be enabled through PCL registers but their strength is fixed as indicated in the GPIO spreadsheet, refer to it for each individual pad's pull class.

Drive strength, also referred to as drive/output current for the pad. 2mA, 4mA, 8mA and 12mA are supported and can be selected by PCL register.

Buffer Type: Schmitt Trigger ST or buffer BU. This setting is not selectable through PCL registers. Refer to GPIO spreadsheet for each individual pad's buffer type.

RESET state during RESET (PU or PD): All pads come up in a default state during and after reset until PCL registers are initialized. It is important to note that connection of each GPIO to application circuit requires determination whether application circuit is sensitive to the GPIO being HIGH or LOW at reset, e.g., it might not be desirable to have an RF transmitter enabled by default during power-on reset so the GPIO allocated to its RESET and/or power-down input should be such that it holds the transmitter in "disabled" state at the time of power-on until SW takes control. Refer to GPIO table for each individual pad's default state at reset.

Signal direction during RESET (input or output): Refer to GPIO table for each individual pad's default direction at reset.

Functions multiplexed on each pad: Each pad not associated with dedicated interfaces can have up to 7 alternate functions multiplexed on it in addition to GPIO function. Refer to GPIO table for each individual pad's alternate functions.
Interrupts: the chip set supports sixteen external interrupts (EINT[15:0]) signals that are multiplexed on different pins but can only be used in one location. Not all interrupt signals are available as some are on pins used for dedicated functions.
GPIOs and their different aspects described above can be configured through SW. Please refer to software architecture document for more details.

Reproduction forbidden without written authorization from Telit Communications S.p.A. - All Rights Reserved.

SoC Pin Name	SoC Ball	I/O @ Reset	State @ Reset	voltage domain	buffer type	DBB pull class	F1	F2	F3	F4	F5	F6	F7	GPIO Index	xE922_3GR Selected Function	xE9223GR Signal Name	xE922_3GR LGA PIN#	Description
#DBB KEYPAD I/F																		
KP_IN0	C20	I	T/PD	1.8V	ST	A	KP_IN0	MIPI_TRACE_DATA0	0	MIPI_TRACE_DATA8	TRACE_CADATA	HW_MON4	EINT_5	GPIO_000	EINT_5	GPIO0_EINT5	AV8	GPIO / External IRQ
KP_IN1	D20	I	T/PD	1.8V	ST	A	KP_IN1	MIPI_TRACE_DATA1	PWM1	MIPI_TRACE_DATA9	TRACE_CAFLAG	HW_MON5	EINT_2	GPIO_001	EINT_2	GPIO1_EINT2	AT8	External IRQ, Used for SoC USB ID WU from Sleep
KP_IN2	C21	I	T/PD	1.8V	ST	A	KP_IN2	MIPI_TRACE_DATA2	0	MIPI_TRACE_DATA10	TRACE_CAREADY	HW_MON6	EINT_4	GPIO_002	EINT_4	VBUS_DET	AR8	External IRQ, used for VBUS Detection
KP_OUT0	D21	I	T/PD	1.8V	ST	A	KP_OUT0	MIPI_TRACE_DATA3	CC2_IN	MIPI_TRACE_DATA11	TRACE_ACDATA	HW_MON7	EINT_6	GPIO_003	CC2_IN	USIM2_DETECT	AR10	USIM2_Detect
KP_OUT1	E17	I	T/PD	1.8V	ST	A	KP_OUT1	MIPI_TRACE_CLK	CC1_IN	0	TRACE_ACFLAG	HW_MON8	ETM7_PIPESTAT0	GPIO_004	CC1_IN	USIM1_DETECT	AN10	USIM1_Detect
KP_OUT2	C19	I	T/PD	1.8V	ST	A	KP_OUT2	MIPI_TRACE_DATA4	DSP_2G_IN0	MIPI_TRACE_DATA12	TRACE_ACREADY	HW_MON9	EINT_7	GPIO_005	EINT_7	GPIO5_EINT7	AS11	GPIO / USB_FAULT IRQ
KP_OUT3	D19	I	T/PD	1.8V	ST	A	KP_OUT3	MIPI_TRACE_DATA5	DSP_2G_IN1	MIPI_TRACE_DATA13	GPO_3G_0	HW_MON10	ETM7_PIPESTAT1	GPIO_006	GPIO_006	LCD_RESET	AP11	LCD Reset
KP_IN3	E20	I	T/PD	1.8V	ST	A	KP_IN3	MIPI_TRACE_DATA6	POS_FTA_FTR	MIPI_TRACE_DATA14	GPO_3G_1	HW_MON11	ETM7_PIPESTAT2	GPIO_007	GPIO_007	GPIO7	AN8	GNSS_FTA
KP_IN5	C18	I	T/PD	1.8V	ST	A	KP_IN5	CC0_CC0IO	DSP_2G_OUT0	CC1_CC1IO	GPO_3G_3	HW_MON13	EINT_3	GPIO_009	EINT_3	LCD_TE	AP9	LCD Tearing effect input
KP_IN6	B20	I	T/PD	1.8V	ST	A	KP_IN6	I2C3_SDA	POS_FTA_FTR	CC0_CC2IO	DSP_AUDIO_OUT0	HW_MON14	0	GPIO_010	I2C3_SDA	AUX_I2C_SDA	AS1	I2C3 Data (AUX / Sensors)
KP_OUT4	D17	I	T/PD	1.8V	ST	A	KP_OUT4	I2C3_SCL	EINT_4	CC0_CC5IO	DSP_AUDIO_OUT1	HW_MON15	CLKOUT0	GPIO_011	I2C3_SCL	AUX_I2C_SCL	AT2	I2C3 Clock (AUX / Sensors)
#DBB USIF1																		
USIF1_RXD_MRST	G3	I	T/PD	1.8V	ST	A	USIF1_RXD_MRST	0	EINT_0	I2S1_RX	DSP_AUDIO_OUT2	HW_MON16	PWM0	GPIO_012	USIF1_RXD_MRST	USIF1_RXD	W5	UART1 / SPI1 Serial data input
USIF1_TXD_MTSR	G2	I	T/PD	1.8V	ST	A	USIF1_TXD_MTSR	0	KP_OUT5	I2S1_TX	EINT_1	0	0	GPIO_013	USIF1_TXD_MTSR	USIF1_TXD	Y5	UART1 / SPI1 Serial data Output
USIF1_CSO0	G5	I	T/PD	1.8V	ST	A	USIF1_CSO0	0	KP_OUT6	I2S1_WA0	EINT_3	USIF1_CTS_N	CC1_IN	GPIO_014	USIF1_CSO0	USIF1_SCLK	S5	UART1 CTS / SPI1 SCLK
USIF1_SCLK	G4	I	T/PD	1.8V	ST	A	USIF1_SCLK	0	KP_OUT7	I2S1_CLK0	CC2_IN	USIF1_RTS_N	EINT_9	GPIO_015	USIF1_SCLK	USIF1_CS	U5	UART1 RTS / SPI1 Chip Select
#DBB USIF2																		
USIF2_RXD_MRST	E12	I	T/PD	1.8V	ST	A	USIF2_RXD_MRST	0	EINT_10	EINT_6	CC0_CC4IO	0	CIF_PRELIGHT_TRIG	GPIO_016	USIF2_RXD_MRST	USIF2_RXD	AH3	UART2 / SPI2 Serial data input
USIF2_TXD_MTSR	E10	I	T/PD	1.8V	ST	A	USIF2_TXD_MTSR	0	CC1_CC0IO	EINT_11	USI_T_IN_TIME_EXT	POS_FTA_FTR	CIF_FL_TRIG_OUT	GPIO_017	USIF2_TXD_MTSR	USIF2_TXD	AE4	UART2 / SPI2 Serial data Output
USIF2_RTS_N	A12	I	T/PD	1.8V	ST	A	USIF2_RTS_N	0	EINT_12	USIF2_CSO0	KP_IN7	USIF2_CSI_N	CIF_SHUTTER_TRIG	GPIO_018	USIF2_RTS_N	USIF2_SCLK	AD5	UART2 CTS / SPI2 SCLK
USIF2_CTS_N	A13	I	T/PD	1.8V	ST	A	USIF2_CTS_N	0	BREAK_IN	USIF2_SCLK	CC1_IN	EINT_13	CIF_SHUTTER_OPEN	GPIO_019	USIF2_CTS_N	USIF2_CS	AJ2	UART2 RTS / SPI2 Chip Select
#DBB NAND																		
NAND_ALE	U6	O	L	1.8V	ST	A	NAND_ALE	SDIO_CMD	USIRFSEQGP0_3G	KP_IN6	EINT_10	RTCK	CC1_CC4IO	GPIO_031	SDIO_CMD	SDIO_CMD	P3	WLAN SDIO Command
NAND_RDN	V5	O	H	1.8V	ST	A	NAND_RDN	SDIO_DAT0	USIRFSEQGP1_3G	KP_OUT4	EINT_11	CC1_CC3IO	USIF2_RTS_N	GPIO_032	SDIO_DAT0	SDIO_DAT0	P1	WLAN SDIO Data 0
NAND_WRN	Y5	O	H	1.8V	ST	A	NAND_WRN	SDIO_DAT1	USIRFSEQGP2_3G	KP_OUT5	PWM3	CC1_CC5IO	USIF2_CTS_N	GPIO_033	SDIO_DAT1	SDIO_DAT1	N2	WLAN SDIO Data 1
NAND_CS0	W4	O	H	1.8V	ST	A	NAND_CS0	SDIO_DAT2	USIRFSEQGP3_3G	KP_OUT6	EINT_14	CC1_CC6IO	CLKOUT0	GPIO_034	SDIO_DAT2	SDIO_DAT2	M3	WLAN SDIO Data 2
NAND_CS1	AA4	O	H	1.8V	ST	A	NAND_CS1	SDIO_DAT3	POS_FTA_FTR	KP_OUT7	BREAK_OUT	CC1_CC4IO	USIF5_RXD_MRST	GPIO_035	SDIO_DAT3	SDIO_DAT3	N4	WLAN SDIO Data 3
NAND_DQS	Y4	I	T/PD	1.8V	ST	A	NAND_DQS	SDIO_CLK	EINT_7	CC1_IN	BREAK_IN	CC0_CC7IO	USIF5_TXD_MTSR	GPIO_036	SDIO_CLK	SDIO_CLK	L4	WLAN SDIO Clock
#DBB SDMMC																		
SDMMC_CMD	T2	I	T/PD	1.8V/2.9V	BU	B	SDMMC_CMD	USIF2_RXD_MRST	EINT_6	KP_IN7	0	DUMMY_INOUT1	0	GPIO_037	SDMMC_CMD	SD_CMD	G2	SD Card Command
SDMMC_DAT0	T3	I	T/PD	1.8V/2.9V	BU	B	SDMMC_DAT0	MIPI_TRACE_DATA0	CC0_CC3IO	DUMMY_INOUT8	EINT_12	DUMMY_INOUT2	0	GPIO_038	SDMMC_DAT0	SD_DAT0	F1	SD Card Data 0
SDMMC_DAT1	U2	I	T/PD	1.8V/2.9V	BU	B	SDMMC_DAT1	MIPI_TRACE_DATA1	EINT_7	CC0_CC6IO	0	DUMMY_INOUT3	0	GPIO_039	SDMMC_DAT1	SD_DAT1	H1	SD Card Data 1
SDMMC_DAT2	T4	I	T/PD	1.8V/2.9V	BU	B	SDMMC_DAT2	MIPI_TRACE_DATA2	BREAK_IN	CC1_CC1IO	0	DUMMY_INOUT4	0	GPIO_040	SDMMC_DAT2	SD_DAT2	K1	SD Card Data 2
SDMMC_DAT3	T5	I	T/PU	1.8V/2.9V	BU	B	SDMMC_DAT3	MIPI_TRACE_DATA3	0	SDMMC_CARD_DETECT	0	DUMMY_INOUT5	0	GPIO_041	SDMMC_DAT3	SD_DAT3	M1	SD Card Data 3
SDMMC_CLK	T1	O	L	1.8V/2.9V	BU	B	SDMMC_CLK	MIPI_TRACE_CLK	CC0_CC4IO	0	0	DUMMY_INOUT6	0	GPIO_042	SDMMC_CLK	SD_CLK	E2	SD Card Clock
SDMMC_CARD_DETECT	E13	I	T/PD	1.8V	BU	A	SDMMC_CARD_DETECT	SDMMC_RESET	EINT_8	0	0	DUMMY_INOUT7	0	GPIO_043	SDMMC_CARD_DETECT	SD_CARD_DET	J2	SD Card Detect
#DBB DISPLAY																		
DIF_D0	M1	I	T/PD	1.8V	ST	B	DIF_D0	CIF_D0	CIF_SHUTTER_OPEN	MIPI_TRACE_DATA0	ETM7_PIPESTAT1	0	0	GPIO_044	MIPI_TRACE_DATA0	GPIO44	G10	GPIO / MIPI Trace Data 0
DIF_D1	N3	I	T/PD	1.8V	ST	B	DIF_D1	CIF_D1	CIF_SHUTTER_TRIG	MIPI_TRACE_DATA1	ETM7_PIPESTAT2	0	0	GPIO_045	MIPI_TRACE_DATA1	GPIO45	E10	GPIO / MIPI Trace Data 1
DIF_D2	N5	I	T/PD	1.8V	ST	B	DIF_D2	CIF_D2	CIF_FL_TRIG_OUT	MIPI_TRACE_DATA2	ETM7_TRACESYNC	0	0	GPIO_046	MIPI_TRACE_DATA2	GPIO46	A10	GPIO / MIPI Trace Data 2
DIF_D3	K4	I	T/PD	1.8V	ST	B	DIF_D3	CIF_D3	CIF_PRELIGHT_TRIG	MIPI_TRACE_DATA3	ETM7_TRACEPKT0	0	KP_OUT7	GPIO_047	MIPI_TRACE_DATA3	GPIO47	H9	GPIO / MIPI Trace Data 3
DIF_D4	K5	I	T/PD	1.8V	ST	B	DIF_D4	CIF_D4	CC1_CC5IO	MIPI_TRACE_DATA4	ETM7_TRACEPKT1	KP_OUT6	0	GPIO_048	MIPI_TRACE_DATA4	GPIO48	F9	GPIO / MIPI Trace Data 4
DIF_D5	N4	I	T/PD	1.8V	ST	B	DIF_D5	CIF_D5	EINT_4	MIPI_TRACE_DATA5	ETM7_TRACEPKT2	KP_OUT4	0	GPIO_049	MIPI_TRACE_DATA5	GPIO49	B9	GPIO / MIPI Trace Data 5
DIF_D6	M4	I	T/PD	1.8V	ST	B	DIF_D6	CIF_D6	EINT_5	MIPI_TRACE_DATA6	ETM7_TRACEPKT3	KP_OUT5	USIF2_TXD_MTSR	GPIO_050	MIPI_TRACE_DATA6	GPIO50	G8	GPIO / MIPI Trace Data 6
DIF_D7	K3	I	T/PD	1.8V	ST	B	DIF_D7	CIF_D7	CC1_CC6IO	MIPI_TRACE_DATA7	ETM7_TRACEPKT4	KP_IN6	0	GPIO_051	MIPI_TRACE_DATA7	GPIO51	E8	GPIO / MIPI Trace Data 7
DIF_D8	M3	I	T/PD	1.8V	ST	B	DIF_D8	KP_IN7	CC0_CC4IO	EINT_15	ETM7_TRACEPKT5	CC0_T0IN	CC1_CC4IO	GPIO_052	GPIO_052	GPIO52_EINT15	A8	GPIO / External IRQ
DIF_KP_IN7	M2	I	T/PD	1.8V	ST	B	DIF_KP_IN7	EINT_0	EINT_6	MIPI_TRACE_CLK	ETM7_TRACECLK	0	0	GPIO_053	MIPI_TRACE_CLK	GPIO53	H17	GPIO / MIPI Trace Clock
DIF_DCLK	N1	I	T/PD	1.8V	ST	B	DIF_DCLK	EINT_1	0	0	ETM7_TRACEPKT6	CC0_T1IN	CC1_CC3IO	GPIO_054	GPIO_054	GPIO54_EINT1	K5	GPIO / External IRQ
DIF_PWM2	F2	I	T/PD	1.8V	ST	B	DIF_PWM2	CIF_VSYNC	EINT_15	0	ETM7_PIPESTAT0	0	CC1_CC2IO	GPIO_055	GPIO_055	GPIO55_EINT15	G14	GPIO / External IRQ
DIF_D9	M5	I	T/PD	1.8V	ST	B	DIF_D9	CIF_HSYNC	CC1_CC0IO	0	ETM7_TRACEPKT7	CC1_T0IN	BREAK_OUT	GPIO_056	GPIO_056	GPIO56	H7	GPIO 56
DIF_HSYNC	K1	I	T/PD	1.8V	ST	B	DIF_HSYNC	0	0	CC2_IN	CC1_CC7IO	EINT_9	0	GPIO_057	GPIO_057	GPIO57_EINT9	B11	GPIO / External IRQ
DIF_VSYNC	G1	I	T/PD	1.8V	ST	B	DIF_VSYNC	CIF_PCLK	0	USIF2_RXD_MRST	0	EINT_2	0	GPIO_058	GPIO_058	GPIO58_EINT2	D11	GPIO / External IRQ
DIF_DATA_EN	J3	I	T/PD	1.8V	ST	B	DIF_DATA_EN	0	0	RTCK	0	CC1_T1IN	EINT_14	GPIO_059	EINT_14	TP_IRQ	F11	Touch interrupt
DIF_D10	K2	I	T/PD	1.8V	ST	B	DIF_D10	USIF1_TXD_MTSR	USIF2_RXD_MRST	EINT_6	T_OUT5	USIF5_RXD_MRST	BREAK_IN	GPIO_060	GPIO_060	TP_RESET	F7	Touch Reset
DIF_D11	J4	I	T/PD	1.8V	ST	B	DIF_D11	USIF1_RXD_MRST	MIPI_TRACE_DATA8	CC1_CC2IO	T_OUT4	CIF_SHUTTER_OPEN	EINT_13	GPIO_061	GPIO_061	CAM1_FLASH	B7	Main Camera Flash Enable
DIF_D12	J1	I	T/PD	1.8V	ST	B	DIF_D12	DM_DAT2	MIPI_TRACE_DATA9	EINT_14	T_OUT2	CIF_SHUTTER_TRIG	0	GPIO_062	GPIO_062	CAM1_TORCH	G6	Main Camera Torch Enable
DIF_D13	J5	I	T/PD	1.8V	ST	B	DIF_D13	DM_CLK	MIPI_TRACE_DATA10	CLKOUT0	EINT_8	USIF5_TXD_MTSR	0	GPIO_063	GPIO_063	GPIO63_EINT8	E6	GPIO / External IRQ
DIF_D14	J2	I	T/PD	1.8V	ST	B	DIF_D14	DM_DAT1	MIPI_TRACE_DATA11	EINT_13	CIF_FL_TRIG_IN	0	BREAK_OUT	GPIO_064	GPIO_064	GPIO64_EINT13	A6	GPIO / External IRQ
DIF_D15	H2	I	T/PD	1.8V	ST	B	DIF_D15	USIF1_SCLK	MIPI_TRACE_DATA12	GPI_3G_1	BREAK_IN	USIF1_RTS_N	0	GPIO_065	GPIO_065	GPIO65	H5	GPIO
DIF_D16	R1	I	T/PD	1.8V	ST	B	DIF_D16	USIF1_CSO0	EINT_15	GPI_3G_0	CC1_CC3IO	USIF1_CTS_N	0	GPIO_066	GPIO_066	GPIO66_EINT15	F5	GPIO / External IRQ
DIF_D17	R2	I	T/PD	1.8V	ST	B	DIF_D17	0	MIPI_TRACE_DATA13	EINT_0	0	0	SDIO_RESET	GPIO_067	GPIO_067	GPIO67_EINT0	B5	GPIO / External IRQ
DIF_D18	L2	I	T/PD	1.8V	ST	B	DIF_D18	0	MIPI_TRACE_DATA14	EINT_5	0	0	SDIO_CLK	GPIO_068	GPIO_068	CAM1_RESET	G4	Main Camera Reset
DIF_D19	N2	I	T/PD	1.8V	ST	B	DIF_D19	0	MIPI_TRACE_DATA15	EINT_1	0	0	SDIO_CMD	GPIO_069	GPIO_069	CAM2_RESET	E4	Sub Camera Reset
DIF_D20	R4	I	T/PD	1.8V	ST	B	DIF_D20	0	0	EINT_7	0	0	SDIO_DAT0	GPIO_070	GPIO_070	CAM1_PD	A4	Main Camera Power Down
DIF_D21	R3	I	T/PD	1.8V	ST	B	DIF_D21	HW_MON13	0	EINT_8	0	0	SDIO_DAT1	GPIO_071	GPIO_071	CAM2_PD	H3	Sub Camera Power Down
DIF_D22	R5	I	T/PD	1.8V	ST	B	DIF_D22	HW_MON14	0	EINT_9	0	0	SDIO_DAT2	GPIO_072	GPIO_072	GPIO72_EINT9	F3	GPIO / External IRQ
DIF_D23	P2	I	T/PD	1.8V	ST	B	DIF_D23	HW_MON15	0	EINT_10	0	0	SDIO_DAT3	GPIO_073	GPIO_073	GPIO73_EINT10	B3	GPIO / External IRQ
#DBB I2C1 _A (Camera)																		
I2C1_SCL	B14	I	T/PU	1.8V	ST	A	I2C1_SCL	USIF1_CSO1	GSICTRL0	0	0	0	0	GPIO_084	I2C1_SCL	CAM_I2C_SCL	AP17	Camera I2C Clock
I2C1_SDA	A15	I	T/PU	1.8V	ST	A	I2C1_SDA	USIF2_CSO1	GSICTRL1	0	0	0	0	GPIO_085	I2C1_SDA	CAM_I2C_SDA	AM17	Camera I2C Data
#DBB I2C4 _B (Touch)																		
I2C4_SDA	F3	I	T	1.8V	ST	A	I2C4_SDA	0	0	0	0	0	0	GPIO_088	I2C4_SDA	TP_SDA	AD17	Touch I2C Data
I2C4_SCL	F4	I	T	1.8V	ST	A	I2C4_SCL	0	0	0	0	0	0	GPIO_089	I2C4_SCL	TP_SCL	AB17	Touch I2C Clock
#DBB USIM1																		
CC1_IO	B18	O	L	1.8V/2.9V	ST	A	CC1_IO	0	0	0	0	0	0	GPIO_090	CC1_IO	SIMIO1	AT6	SIM1_IO
CC1_RST	B17	O	L	1.8V/2.9V	ST	A	CC1_RST	0	0	0	0	0	0	GPIO_091	CC1_RST	SIMRST1	AN6	SIM1_Reset
CC1_CLK	A18	O	L	1.8V/2.9V	ST	A	CC1_CLK	0	0	0	0	0	0	GPIO_092	CC1_CLK	SIMCLK1	AR6	SIM1_Clock
#DBB USIM2																		
CC2_IO	D16	O	L	1.8V/2.9V	ST	A	CC2_IO	0	0	0	0	0	0	GPIO_093	CC2_IO	SIMIO2	AU7	SIM2_IO
CC2_RST	A19	O	L	1.8V/2.9V	ST	A	CC2_RST	0	0	0	0	0	0	GPIO_094	CC2_RST	SIMRST2	AP7	SIM2_Reset
CC2_CLK	B19	O	L	1.8V/2.9V	ST	A	CC2_CLK	0	0	0	0	0	0	GPIO_095	CC2_CLK	SIMCLK2	AS7	SIM2_Clock

Reproduction forbidden without written authorization from Telit Communications S.p.A. - All Rights Reserved.

14. Debug / flash interfaces

For debugging and/or flashing FW to the xE922-3GR module, several interfaces are available.
Please refer to EVB documentation for example of debug connector implementations.

14.1. USB2.0 HS

This interface can be used as image flash download and debug interface (ADB debug interface)

14.2. USIF2

UART configuration, can be used for SW logging UART.
An UART-USB convertor could be attached to connect to PC USB port directly).
By default USIF2 is configured for this logging UART interface, but alternatively USIF1 as well could be used.

14.3. JTAG

PAD	Signal	I/O	descriptions	Type
AT4	JTAG_TDO	O	JTAG	CMOS 1.8V
AN4	JTAG_TDI	I	JTAG	CMOS 1.8V
AR4	JTAG_TMS	I	JTAG	CMOS 1.8V
AV4	JTAG_TCK	O	JTAG	CMOS 1.8V
AW5	JTAG_TRST	O	JTAG	CMOS 1.8V
AW3	JTAG_RTCK	I	JTAG	CMOS 1.8V

14.4. Test pads

For test/debug purpose, the following 'RFU' pins are recommended to have test pads attached:

- AB19: SoC RESET_IN (internally driven by PMU AGOLD620)
- AD19: SoC RESET_OUT

In case the application main board, because of place restrictions, cannot foresee in a JTAG connector placeholder, it is recommended to attach at least test pads on:

AT4, AN4, AR4, AV4, AW5, AW3

Reproduction forbidden without written authorization from Telit Communications S.p.A. - All Rights Reserved.

15. Audio

Note:
The audio interface description below explains all possible audio path routing available by the module's LGA pin map.
Currently the FW does not allow changing the preferred audio path on the fly, it is hard coded.

The default audio configuration is:

- Audio in : analog microphone MICP/N1
- Audio out : analog headphone HP_OUT_R/L

Please consult Intel IBL support for other audio path configuration support.

15.1. Analog

Analog Audio				
AK21	EP_P	AO	Differential Earpiece Positive	Analog
AM21	EP_N	AO	Differential Earpiece Negative	Analog
AG20	MICP1	AI	Earpiece microphone 1 signal input; phase+	Analog
AE20	MICN1	AI	Earpiece microphone 1 signal input; phase-	Analog
AF19	MICP2	AI	Headset microphone 2 signal input; phase+	Analog
AH19	MICN2	AI	Headset microphone 2 signal input; phase-	Analog
AJ18	VMIC_BIAS	AO	Analog Microphone bias	power
AJ20	HP_OUT_R	AO	Headset Right Signal Out	Analog
AL20	HP_OUT_L	AO	Headset Left Signal Out	Analog
AH21	SPKR_LP	AO	Speaker Signal Out Positive	Analog
AF21	SPKR_LN	AO	Speaker Signal Out Negative	Analog

Reproduction forbidden without written authorization from Telit Communications S.p.A. - All Rights Reserved.

The following figure shows a top level view of the analog Audio frontend (AFE) of xE92-3GR ABB/PMU. The IDI connects the ABB to the Audio DSP/DBB.

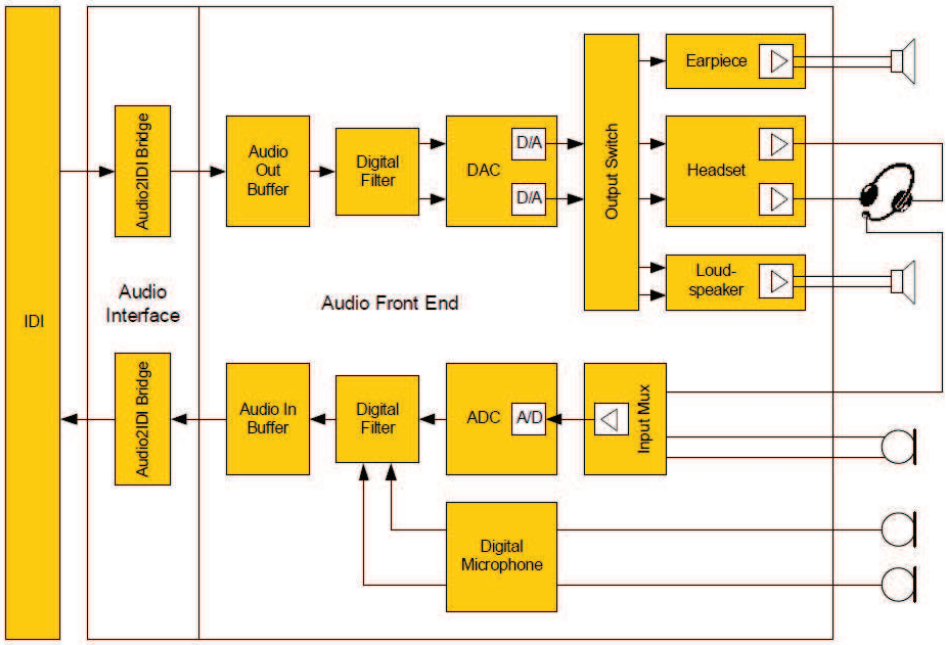

Note:

All measurements done like described in AES-17 standard method for digital audio engineering. The values included in the below tables are extracted from to the chipset datasheet.

15.1.1. Analog IN

The audio-in path consists of an input selector, low noise amplifier LNA and following pre-filter with gain control, second order S-D ADC and finally followed by digital decimator filter. It supports both standard GSM (BW 4 kHz) and wideband (BW 8 kHz) speech bands as well as full BW for audio recording (16 kHz and 24 kHz). Overall gain range of the input path goes from -6 dB to +39dB.

As indicated on below block diagram, two mono microphones inputs are available of which one can be selected at the time, either single ended or differential mode.

Reproduction forbidden without written authorization from Telit Communications S.p.A. - All Rights Reserved.

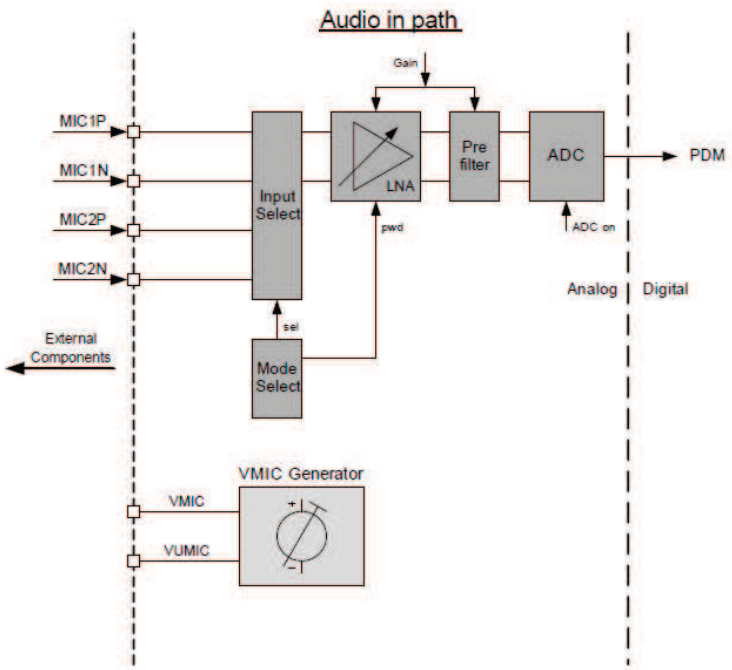

Parameters audio ADC:

Parameter	Min	Typ	Max	Unit	condition
Bit width		16		bit	
BW		20		Hz	Lower limit
	4		20	kHz	Upper limit
sample rate	2		4	MHz	

Parameters decimation filter

Sample rate fs	mode	Passband corner	Passband ripple	Stopband	Stopband attenuation
8 kHz	Narrowband speech	>3.4 kHz	< 1dB	4.0-35 kHz	80 dB
16 kHz	Wideband speech	>6.8 kHz	< 1dB	8.0-35 kHz	80 dB
32 kHz	music	>14 kHz	< 1dB	16-35 kHz	80 dB
48 kHz	CD quality	>20 kHz	< 1dB	24-35 kHz	80 dB

Reproduction forbidden without written authorization from Telit Communications S.p.A. - All Rights Reserved.

The following figure shows typical single ended connection concept for electret microphones (AC coupling value for low cut off frequency @ 300Hz):

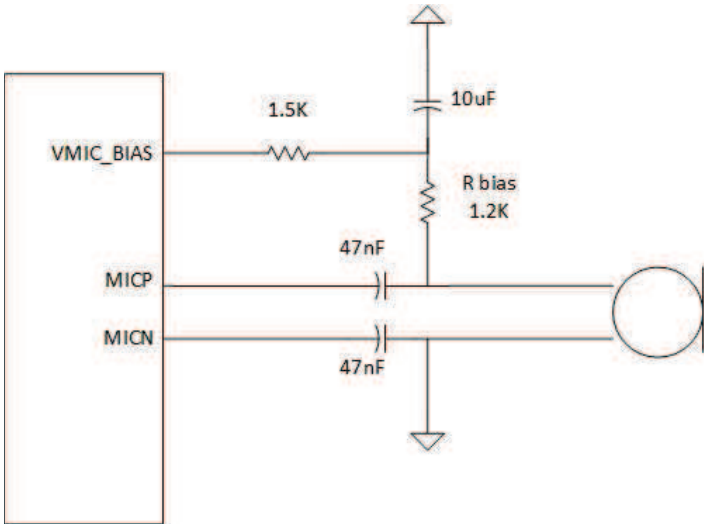

The MICP/MICN should be routed close together in order to minimize interference noise.

Differential mode can be interesting when feeding the MIC input from a differential pre-amplifier.

Parameters analog microphone:

Parameter	Min	Typ	Max	Unit	condition
BW		20		Hz	Lower limit
	4		20	kHz	Upper limit
DR	72			dB FS CCIR	Gain 0dB, BW 300-8000Hz, input 0.8Vpp diff
THD+N	-55			dB	Ref signal -10 dB FS
Freq response	-1.2		0.5	dB	Ref signal -20 dB FS
Input differential			1.6	Vpp	Gain 0dB, 0 dB FS
R_in		25		kOhm	Differential
C_in		5	10	pF	
PSSR	45	66		dB	Gain 0 dB

Reproduction forbidden without written authorization from Telit Communications S.p.A. - All Rights Reserved.

Parameters VMIC_BIAS supply:

Parameter	Min	Typ	Max	Unit	condition
VMIC_BIAS		1.9..2.2		V	
I_out			4.0	mA	
Noise			4	uVrms	300-3900Hz
R_load	1			kOhm	
PSSR		75		dB	

15.1.2. Analog OUT

The analog audio-out consists of two DAC's followed by post filter, and finally the output stage. The DAC is preceeded by digital interpolation filter of which oversampling ratio depends on respective sampling rate.The following block diagram explains how the output DAC signal sources can be switched to the respective output driver options.

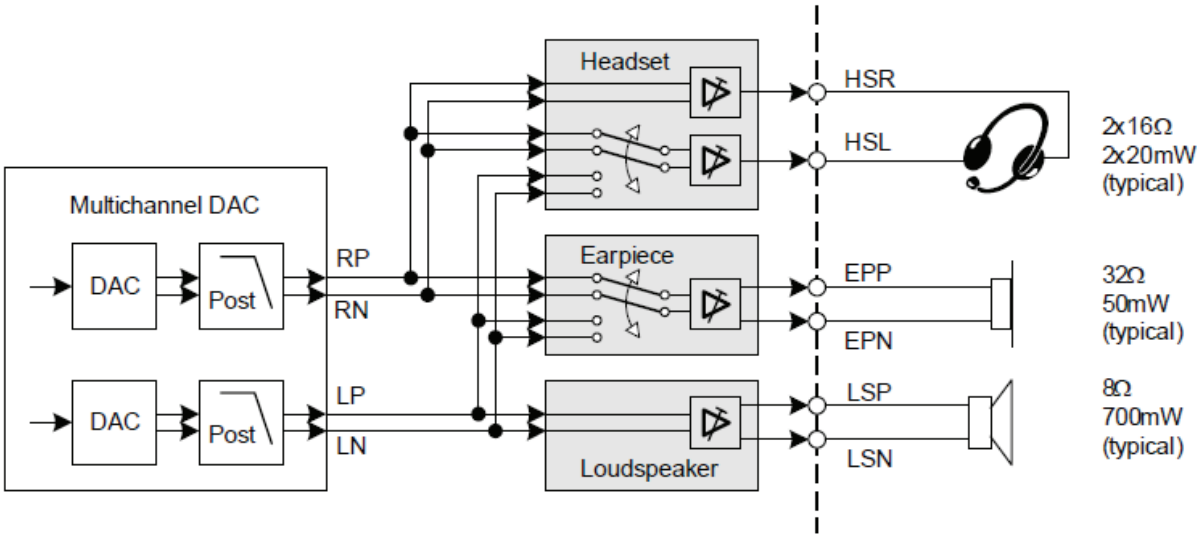

Parameters audio DAC:

Parameter	Min	Typ	Max	Unit	condition
Bit width		16		bit	
BW		20		Hz	Lower limit
	4		20	kHz	Upper limit
Output differential		1.2		Vpp	0 dB FS, gain 0dB

Reproduction forbidden without written authorization from Telit Communications S.p.A. - All Rights Reserved.

Parameters interpolation filter

Sample rate fs	mode	Passband corner	Passband ripple	Stopband	Stopband attenuation
8 kHz	Narrowband speech	>3.4 kHz	< 0.5dB	4.6-50 kHz	96 dB
16 kHz	Wideband speech	>6.8 kHz	< 0.5dB	9.2-50 kHz	96 dB
32 kHz	music	>14 kHz	< 0.5dB	17.6-50 kHz	60 dB
48 kHz	CD quality	>20 kHz	< 0.5dB	26.4-50 kHz	60 dB

15.1.2.1. Earpiece

The earpiece driver works in differential mode.

Parameters earpiece:

Parameter	Min	Typ	Max	Unit	condition
BW		20		Hz	Lower limit
	4		20	kHz	Upper limit
Freq response	-0.5		0.5	dB	20 dB FS ref ampl @997Hz
DR	75	80		dB FS CCIR	RL=16 ohm, gain +6dB
THD+N	-50	-60		dB	RL=16 ohm, gain +6dB, ref signal -10 dB FS
Pout			50	mW	RL=32 ohm
R_load	14			ohm	
gain	-12		12	dB	

15.1.2.2. Headset

The headset driver contains two single ended outputs (L&R). They are working in bipolar more, i.e. capless and ground-centred, to avoid large coupling capacitors for a DC-free operation. To support bipolar mode, the system contains a charge-pump to generate a negative voltage supply.

A click and pop suppression during power on/off sequences is implemented (default enabled)

Reproduction forbidden without written authorization from Telit Communications S.p.A. - All Rights Reserved.

Parameters headset:

Parameter	Min	Typ	Max	Unit	condition
BW		20		Hz	Lower limit
	4		20	kHz	Upper limit
Freq response	-0.5		0.5	dB	20 dB FS ref ampl @997Hz
DR	85	90		dB FS CCIR	RL=16 ohm, gain +6dB
THD+N	-50	-60		dB	RL=16 ohm, gain +6dB, ref signal -10 dB FS
Vout			2.4	Vpp	RL= 32 ohm, ground-centered
			2.0	Vpp	RL= 16 ohm, ground-centered
R_load	14			ohm	
Gain	-9.1		6	dB	

15.1.2.3. Loudspeaker

ClassD amplifier driving a typical load of 8 ohm.

Output stage directly connected to V_BAT, as such max output power depending on V_BAT level, common mode level = V_BAT/2.

Switching frequency is about 1.2MHz by default, but can be fine-tuned.
For this frequency and the higher harmonics an external filtering has to be applied which could be inherently done with the connected loudspeaker as well.

Fine tuning allows interference reduction. That means the higher harmonics of the switching frequency can be moved into areas where the interference with other system components is minimized, and on the other side the optimum efficiency for the amplifier can be adjusted. If for example interference between the class-D amplifier switching frequency and the RF-TX carrier is observed, the higher harmonics can be moved to be exactly on the RF-TX carrier frequency. That would hide the class-D amplifier harmonics. For a RF-RX slot the higher harmonics can be moved to a different frequency, so that the RF-RX channel is in the middle between two of the higher harmonic spurs of the class-D amplifier.

Reproduction forbidden without written authorization from Telit Communications S.p.A. - All Rights Reserved.

Parameters loudspeaker:

Parameter	Min	Typ	Max	Unit	condition
BW		20		Hz	Lower limit
	4		20	kHz	Upper limit
Freq response	-0.5		0.5	dB	20 dB FS ref ampl @997Hz
DR	73	80		dB FS CCIR	RL=8 ohm, gain 0dB
THD+N	-45	-56		dB	RL=8 ohm, gain 0dB, ref signal -10 dB FS
Pout fundamental wave		700		mW	V_BAT=3.8V,RL= 8 ohm, 10% THD
		1200		mW	V_BAT=5.0V,RL= 8 ohm, 10% THD
R_load		8		ohm	
Efficiency		80		%	V_BAT=3.8V, load 8 ohm, 125pF, 100uH, Pout=100mW
PSSR	80	90		dB	
Gain	0		24	dB	
F_switch classD	0.6	1.2	2.4	MHz	

Reproduction forbidden without written authorization from Telit Communications S.p.A. - All Rights Reserved.

15.2. Digital

15.2.1. I2S

As mentioned in the USIF part, USIF1 interface pins , on top of SPI or UART, can be configured as audio I2S port as well .The below table shows the multiplex pinout in case configured for I2S interface:

USIF1-I2S pin mapping				
W5	USIF1_RXD	I	I2S1_RX	CMOS 1.8V
Y5	USIF1_TXD	O	I2S1_TX	CMOS 1.8V
S5	USIF1_SCLK	I/O	I2S1_CLK0	CMOS 1.8V
U5	USIF1_CS	O	I2S1_WA0	CMOS 1.8V

15.2.2. Digital microphone

Digital microphone				
AV12	DIG_MIC_CLK	DI	Digital microphone Clock Output	CMOS 1.8V
AN12	DIG_MIC_D1	DI	Digital microphone 1 signal input;	CMOS 1.8V
AT12	DIG_MIC_D2	DI	Digital microphone 2 Clock input;	CMOS 1.8V
AG18	MIC_VDD	AO	MEMC/DIG Microphone Power Supply	power

A stereo MEMS microphone can be connected.

By default DIG_MIC_D1 is sampled at the falling edge of the CLK (configurable).

CLK frequency is minimum 1.96 MHz

Parameters MIC_VDD supply:

Parameter	Min	Typ	Max	Unit	condition
VMIC_BIAS		1.9..2.2		V	
I_out			4.0	mA	
Noise			4	µVrms	300-3900Hz
R_load	1			kOhm	
PSSR		75		dB	

Reproduction forbidden without written authorization from Telit Communications S.p.A. - All Rights Reserved.

16. Antenna(s)

The antenna connection and board layout design are the most important parts in the full product design and they strongly reflect on the product's overall performance. Read carefully and follow the requirements and the guidelines for a good and proper design.

16.1. GSM/WCDMA Antenna Requirements

The antenna for a Telit xE922-3GR device must fulfill the following requirements:

GSM / WCDMA Antenna Requirements	
Frequency range	Depending on the frequency bands provided by the network operator, and of those, which subset of band set the OEM may support while using the Telit module, the customer must use the most suitable antenna for covering those bands. The bands supported by Telit xE922-3GR module family are given in Section 2.3
Gain	Maximum Gain in 1900 MHz band = 2.5 dBi Maximum Gain in 850 MHz band = -1.54 dBi
Impedance	50 Ohm
Input power	> 33dBm(2 W) peak power in GSM > 24dBm Average power in WCDMA
VSWR absolute max	<= 10:1
VSWR recommended	<= 2:1

When using the Telit xE922-3GR, since there's no antenna connector on the module, the antenna must be connected to the xE922-3GR antenna pad by means of a transmission line implemented on the PCB.

In the case that the antenna is not directly connected to the antenna pad of the xE922-3GR, then a PCB line is required in order to connect with it or with its connector.

This transmission line shall fulfill the following requirements:

Antenna Line on PCB Requirements	
Characteristic Impedance	50Ohm
Max Attenuation	0.3dB
Coupling with other signals shall be avoided	
Cold End (Ground Plane) of antenna shall be equipotential to the xE922-3GR ground pads	

Furthermore if the device is developed for the US and/or Canada market, it must comply with the FCC and/or IC approval requirements:

This device is to be used only for mobile and fixed application. The antenna(s) used for this transmitter must be installed to provide a separation distance of at least 20 cm from all persons and must not be co-located or operating in conjunction with any other antenna or transmitter. End-Users must be provided with transmitter operation conditions for satisfying RF exposure compliance. OEM integrators must *ensure that the end user has no manual instructions to*

Reproduction forbidden without written authorization from Telit Communications S.p.A. - All Rights Reserved.

remove or install the xE922-3GR module. Antennas used for this OEM module must not exceed 3dBi gain for mobile and fixed operating configurations.

16.1.1. GSM/WCDMA Antenna – PCB line Guidelines

- Make sure that the transmission line's characteristic impedance is 50ohm.
- Keep the line on the PCB as short as possible since the antenna line loss should be less than around 0.3dB.
- Line geometry should have uniform characteristics, constant cross section, avoid meanders and abrupt curves.
- Any suitable geometry/structure can be used for implementing the printed transmission line affecting the antenna.
- If a Ground plane is required in the line geometry, that plane must be continuous and sufficiently extended so the geometry can be as similar as possible to the related canonical model.
- Keep, if possible, at least one layer of the PCB used only for the Ground plane; if possible, use this layer as reference Ground plane for the transmission line.
- It is wise to surround (on both sides) the PCB transmission line with Ground. Avoid having other signal traces facing directly the antenna line trace.
- Avoid crossing any un-shielded transmission line footprint with other traces on different layers.
- The Ground surrounding the antenna line on the PCB must be strictly connected to the main Ground plane by means of via-holes (once per 2mm at least) placed close to the ground edges facing the line trace.
- Place EM-noisy devices as far as possible from xE922-3GR antenna line.
- Keep the antenna line far away from the xE922-3GR power supply lines.
- If EM-noisy devices are present on the PCB hosting the xE922-3GR, such as fast switching ICs, take care to shield them with a metal frame cover.
- If EM-noisy devices are not present around the line, using geometries such as Micro strip or Grounded Coplanar Waveguide is preferred since they typically ensure less attenuation compared to a Strip line having the same length.

16.1.2. GSM/WCDMA Antenna – Installation Guidelines

- Install the antenna in a location with access to the network radio signal.
- If the chosen antenna is a style which requires a ground plane, ensure that it is properly attached, both electrically and mechanically, to a ground plane with dimensions and mechanical structure as recommended by the antenna manufacturer
- The antenna must be installed such that it provides a separation distance of at least 20 cm from all persons and must not be co-located or operating in conjunction with any other antenna or transmitter;
- The antenna must not be installed inside metal cases;

Reproduction forbidden without written authorization from Telit Communications S.p.A. - All Rights Reserved.

16.2. WiFi/BT Antenna Requirements

Antenna recommended specification:

- Frequency: 2.4-2.5GHz
- Gain (peak): 2.3 dBi
- VSWR : max 1.8
- Return loss : max -10 dB
- Radiation : omni directional
- Polarization : linear vertical
- Power handling : 1W
- Impedance 50 ohm

16.3. GNSS Antenna Requirements

The GNSS subsystem of xE922-3GR module is visualized on below block diagram.

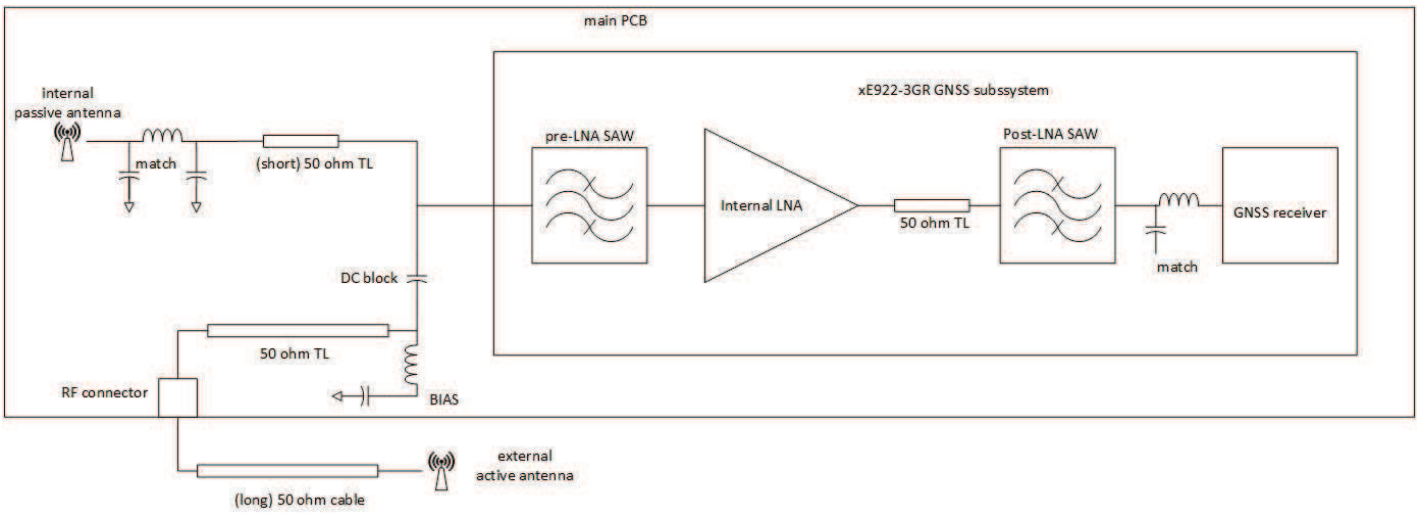

The module features 'internal' pre-LNA_SAW / LNA / post-LNA_SAW RF chain in front of the GNSS receiver.

Two possible GNSS antenna scenarios are possible on the application main board:

- Internal 'passive' antenna
- External 'active' antenna

Both scenarios are drawn in the figure, only one should be applied.

Reproduction forbidden without written authorization from Telit Communications S.p.A. - All Rights Reserved.

In case of an internal antenna configuration, it is important to keep the 50 ohm transmission line (TL) short to limit possible signal degradation between antenna and internal LNA amplifier.

In case of an active external antenna, a bias circuit to feed the antenna integrated LNA is required. An inductor filter is used as RF block. Also a DC-block capacitor is required in order to keep unwanted DC voltage away from the internal RF FE devices.

Care should be taken to minimize stubs on the 50ohm PCB structure because of placement of these additional bias components.

16.3.1. Combined GNSS Antenna

The use of combined RF/GNSS antenna is NOT recommended. This solution could generate extremely poor GNSS reception. In addition, the combination of antennas requires an additional diplexer, which adds significant power losses in the RF path.

16.3.2. Linear and Patch GNSS Antenna

Using linear type of antenna introduces at least 3dB of loss compared to a circularly polarized (CP) antenna. Having a spherical gain response instead of a hemispherical gain response could aggravate the multipath behavior & create poor position accuracy.

16.3.3. Front End Design Considerations

When using the Telit xE922-3GR, since there is no antenna connector on the module, the antenna must be connected to the xE922-3GR through the PCB to the antenna pad.

In the case that the antenna is not directly connected at the antenna pad of the xE922-3GR, then a PCB line is required.

This line of transmission shall fulfill the following requirements:

Antenna Line on PCB Requirements	
Characteristic Impedance	50Ohm
Max Attenuation	0.3dB
Coupling with other signals shall be avoided	
Cold End (Ground Plane) of antenna shall be equipotential to the xE922-3GR ground pads	

Furthermore if the device is developed for the US and/or Canada market, it must comply with the FCC and/or IC requirements.

This device is to be used only for mobile and fixed application.

Reproduction forbidden without written authorization from Telit Communications S.p.A. - All Rights Reserved.

16.3.4. GNSS Antenna - PCB Line Guidelines

- Ensure that the antenna line impedance is 50ohm.
- Keep the line on the PCB as short as possible to reduce the loss.
- The antenna line must have uniform characteristics, constant cross section, avoiding meanders and abrupt curves.
- Keep one layer of the PCB used only for the Ground plane; if possible.
- Surround (on the sides, over and under) the antenna line on the PCB with Ground. Avoid having other signal traces in proximity of the transmission line where coupling may occur.
- The Ground around the antenna line on the PCB must be strictly connected to the main Ground plane by placing vias at least once per 2mm.
- Place EM-noisy devices as far as possible from xE922-3GR antenna line.
- Keep the antenna line far away from the xE922-3GR power supply lines.
- If EM-noisy devices are around the PCB hosting the xE922-3GR, such as fast switching ICs, ensure shielding the antenna line by burying it inside the layers of PCB and surrounding it with Ground planes; or shield it with a metal frame cover.
- If you do not have EM-noisy devices around the PCB of xE922-3GR, use a Micro strip line on the surface copper layer for the antenna line. The line attenuation will be lower than a buried one.

16.3.5. GNSS Antenna – Installation Guidelines

- The xE922-3GR, due to its sensitivity characteristics, is capable of performing a fix inside buildings. (In any case the sensitivity could be affected by the building characteristics i.e. shielding)
- If the chosen antenna is a style which requires a ground plane, ensure that it is properly attached, both electrically and mechanically, to a ground plane with dimensions and mechanical structure as recommended by the antenna manufacturer
- The antenna must not be co-located or operating in conjunction with any other antenna or transmitter.
- The antenna shall not be installed inside metal cases.

Reproduction forbidden without written authorization from Telit Communications S.p.A. - All Rights Reserved.

17. Mounting the module on your board

17.1. General

The xE922-3GR module is designed to be compliant with a standard lead-free SMT process

17.2. Finishing & Dimensions

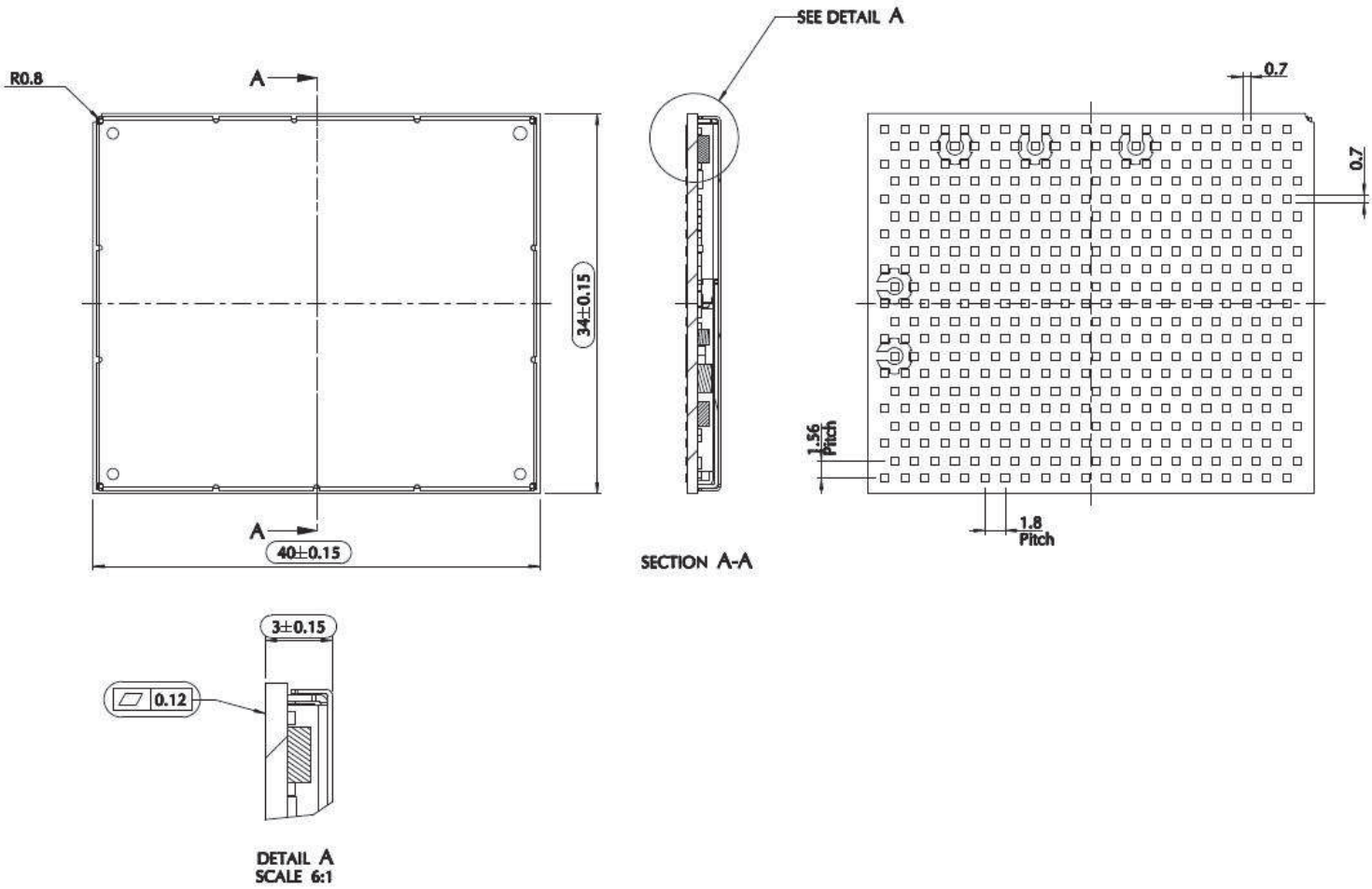

Board finsih : ENIG (Electroless Nickel Immersion Gold)

Reproduction forbidden without written authorization from Telit Communications S.p.A. - All Rights Reserved.

17.3. Recommended foot print for the application main board

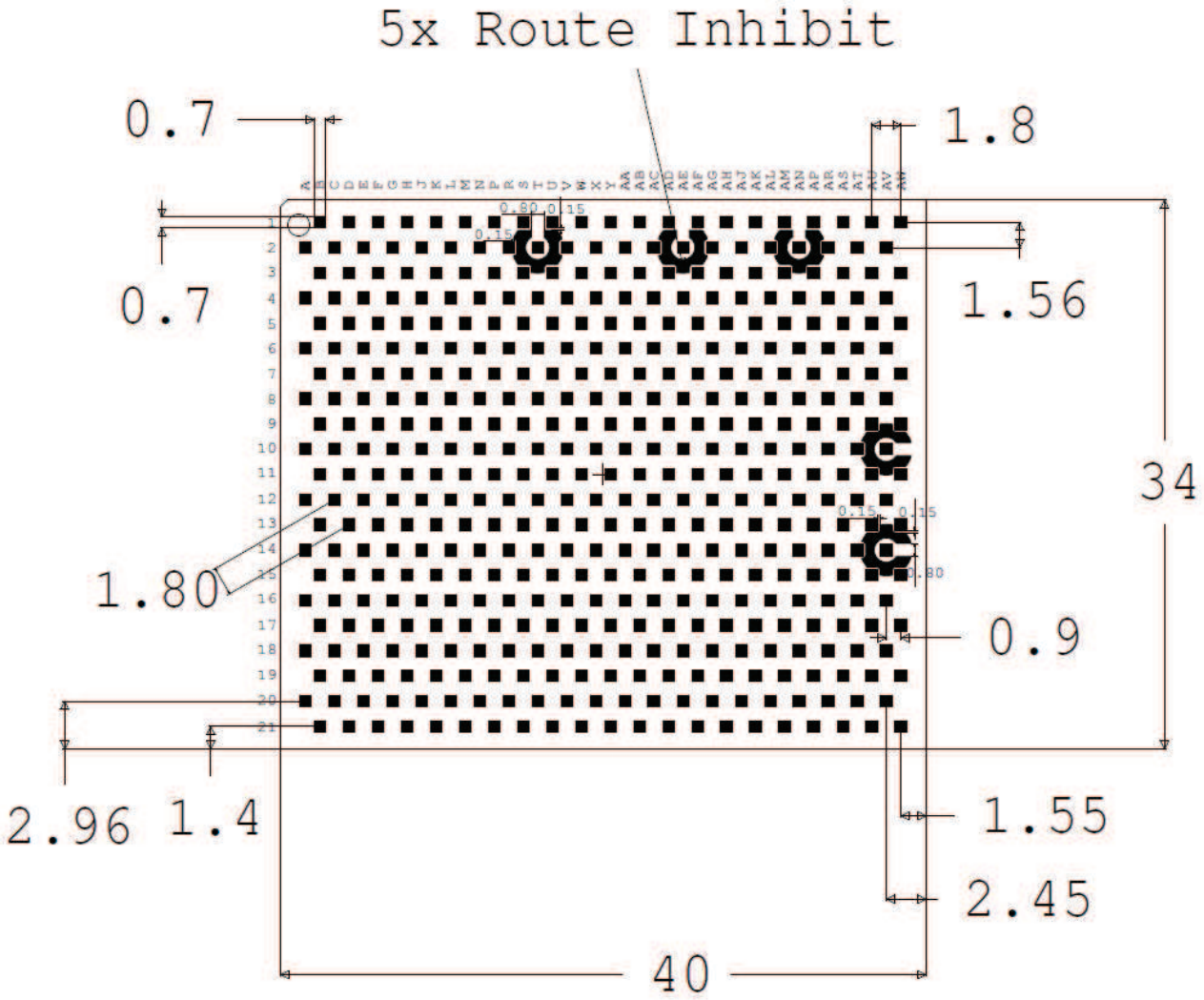

441 pads

transparant top view

Dimensions are in [mm].In order to easily rework the xE922-3GR it is suggested to consider that the application has a 1.5 mm placement inhibit area around the module.

It is also suggested, as a common rule for an SMT component, to avoid having a mechanical part of the application in direct contact with the module.

Reproduction forbidden without written authorization from Telit Communications S.p.A. - All Rights Reserved.

NOTE:

In the customer application, the region under ROUTE INHIBIT (see figure above) must be clear from signal. The five horseshoe shapes, indicated in the footprint picture above, are solder resist mask openings in the surrounding GND copper fill. They provide proper GND connection for built-in RF probes on Telit's production test jig socket. It is not intended to replicate these horseshoe shapes as well on the customer's module carrier board implementation, the GND pads surrounding the antenna pads provide solid RF GND.

17.4. Stencil

Stencil's apertures layout can be the same as the recommended footprint (1:1). A suggested thickness of stencil foil is greater than 150 µm.

17.5. PCB Pad Design

Non solder mask defined (NSMD) type is recommended for the solder pads on the PCB.

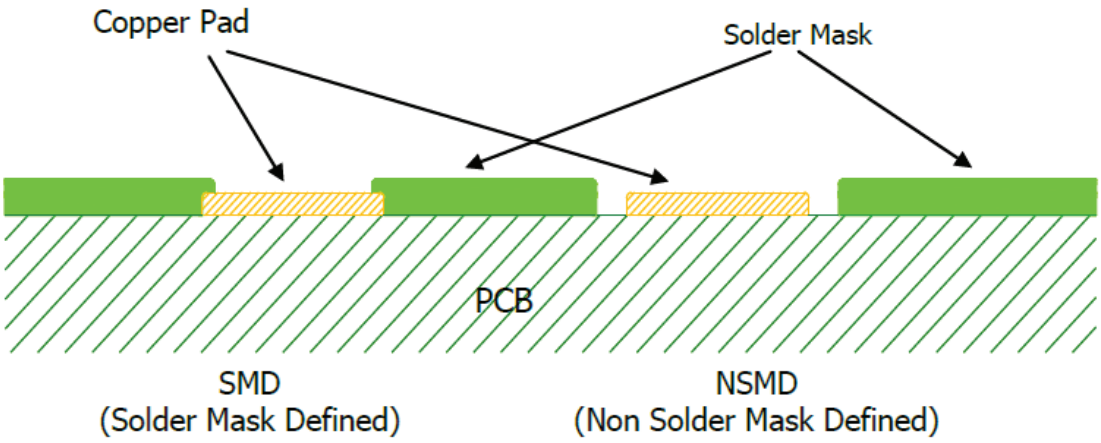

Reproduction forbidden without written authorization from Telit Communications S.p.A. - All Rights Reserved.

17.6. Recommendations for PCB Pad Dimensions (mm)

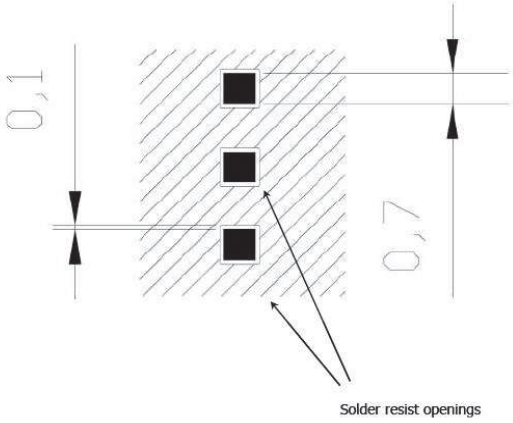

It is not recommended to place via or micro-via, which are not covered by solder resist in an area of 0.3 mm around the pads unless it carries the same signal of the pad itself (see following figure).

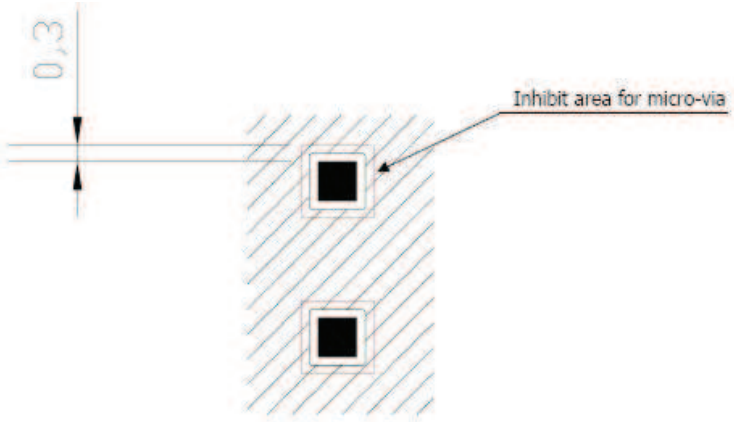

Holes in pad are allowed only for blind holes and not for through holes.

Recommendations for PCB Pad Surfaces:

Finish	Layer thickness (um)	Properties
Electro-less Ni / Immersion Au	3 –7 / 0.05 – 0.15	good solder ability protection, high shear force values

The PCB must be able to resist the higher temperatures which occur during the lead-free process. This issue should be discussed with the PCB-supplier. Generally, the wettability of tin-lead solder paste on the described surface plating is better compared to lead-free solder paste.

Reproduction forbidden without written authorization from Telit Communications S.p.A. - All Rights Reserved.

17.7. Solder Paste

Solder Paste	Lead free
	Sn/Ag/Cu

We recommend using only “no clean” solder paste in order to avoid the cleaning of the modules after assembly.

17.7.1. Solder Reflow

Recommended solder reflow profile is shown below:

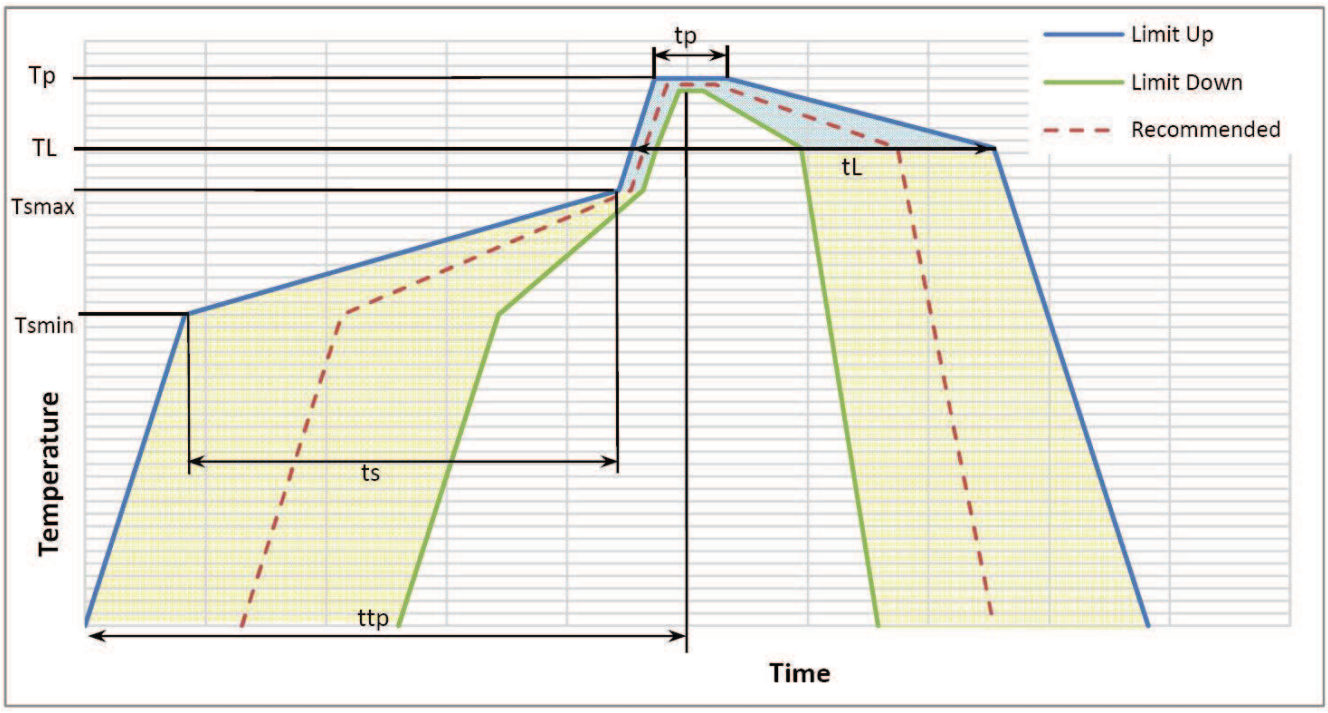

Reproduction forbidden without written authorization from Telit Communications S.p.A. - All Rights Reserved.

Profile Feature	Pb-Free Assembly
Average ramp-up rate (T_L to T_P)	3°C/second max
Preheat – Temperature Min (Tsmin) – Temperature Max (Tsmax) – Time (min to max) (ts)	 150°C 200°C 60-180 seconds
Tsmax to TL – Ramp-up Rate	 3°C/second max
Time maintained above: – Temperature (TL) – Time (tL)	 217°C 60-150 seconds
Peak Temperature (Tp)	245 +0/-5°C
Time within 5°C of actual Peak Temperature (tp)	10-30 seconds
Ramp-down Rate	6°C/second max.
Time 25°C to Peak Temperature	8 minutes max.

NOTE:

All temperatures refer to topside of the package, measured on the package body surface.

WARNING:

The xE922-3GR module withstands one reflow process only.

Reproduction forbidden without written authorization from Telit Communications S.p.A. - All Rights Reserved.

18. Packing system

The Telit xE922-3GR module is packaged on trays.
The tray is JEDEC compliant, injection molded antistatic Modified Polyphenylene ether (MPPO). It has good thermal characteristics and can withstand a the standard baking temperature up to 125°C, thereby avoiding handling the modules if baking is required. The trays are rigid, thus providing more mechanical protection against transport stress. Additionally they are re-usable and so environmentally sustainable.

There are 2 (two) antistatic rubber bands that enclose each envelope.

The carton box is rigid, thus offering mechanical protection. The carton box has one flap across the whole top surface. It is sealed with tape along the edges of the box.

Tray		in each tray	inside each envelope		inside each carton box	
Modules/tray	**Description**	**modules/ tray**	**trays/ envelope**	**modules/ envelope**	**envelopes/ carton box**	**modules/ box**
xE922-3GR packaging	JEDEC Tray	24	**5+ 1 empty**	**120**	4	**480**

	Qty
Minimum Order Quantity (MOQ)	**120**
Standard Packing Quantity (SPQ)	**480**

Each tray contains 24 pieces as shown in the following picture:

Reproduction forbidden without written authorization from Telit Communications S.p.A. - All Rights Reserved.

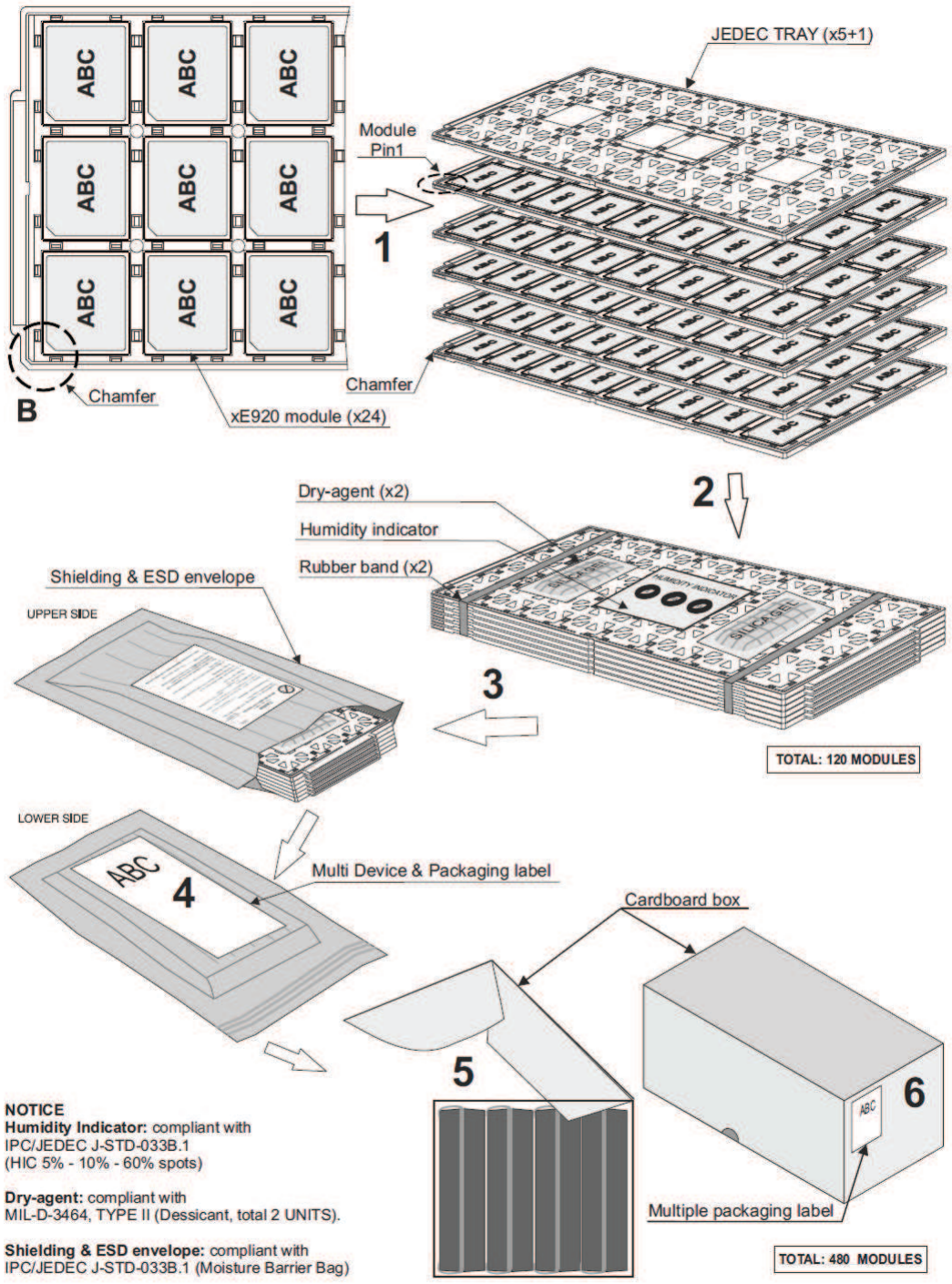

Reproduction forbidden without written authorization from Telit Communications S.p.A. - All Rights Reserved.

18.1. Tray Drawing

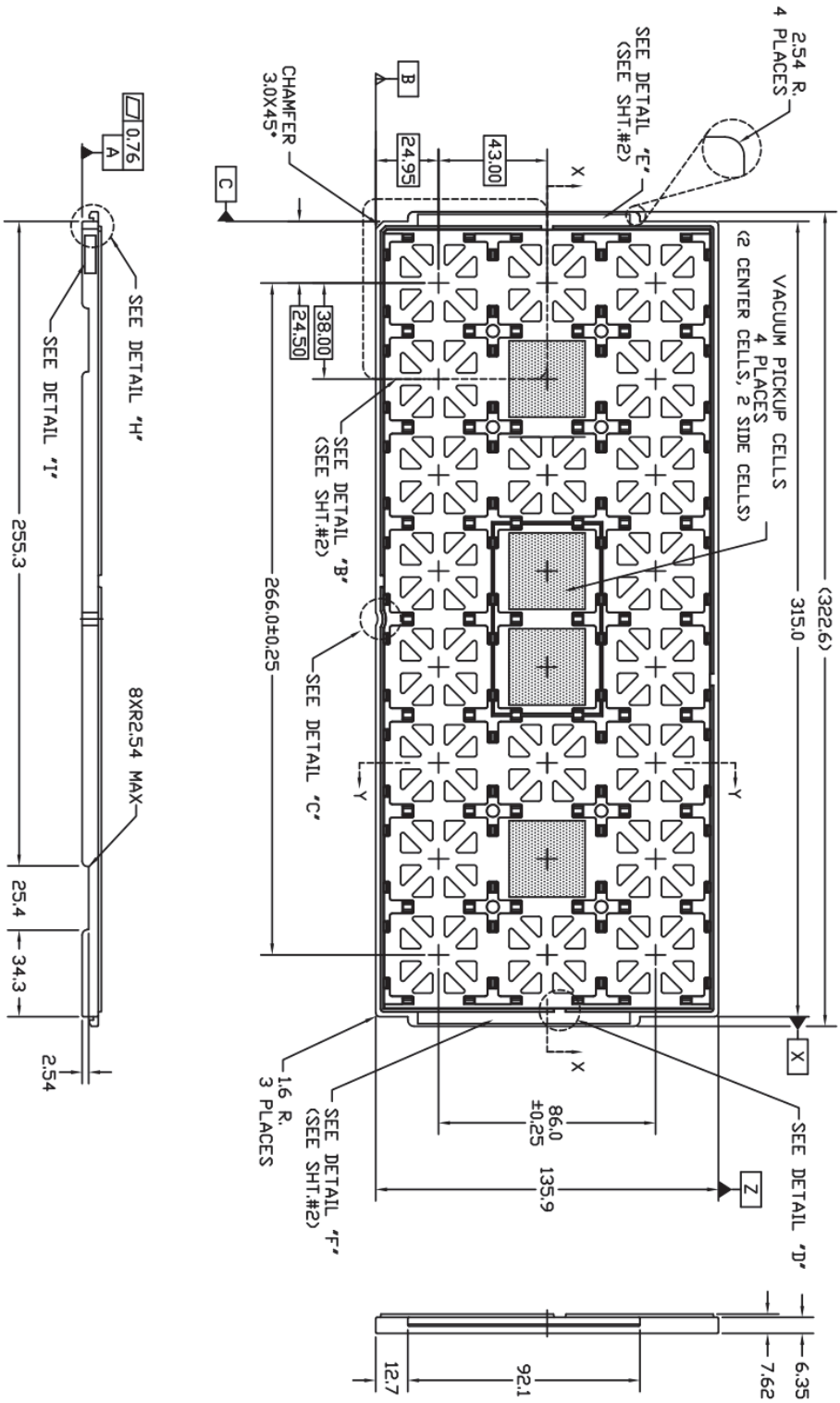

Reproduction forbidden without written authorization from Telit Communications S.p.A. - All Rights Reserved.

18.2. Moisture Sensitivity

The xE922-3GR is a Moisture Sensitive Device level 3, in accordance with standard IPC/JEDEC J-STD-020. Observe all of the requirements for using this kind of components.

Reproduction forbidden without written authorization from Telit Communications S.p.A. - All Rights Reserved.

19. Safety Recommendations

READ CAREFULLY

Be sure that the use of this product is allowed in your country and in the environment required. The use of this product may be dangerous and must be avoided in the following areas:

- Where it can interfere with other electronic devices in environments such as hospitals, airports, aircrafts, etc.
- Where there is risk of explosion such as gasoline stations, oil refineries, etc.

It is the responsibility of the user to enforce the country regulations and the specific environment regulations.

Do not disassemble the product; any mark of tampering will compromise the warranty validity.

We recommend following the instructions of the hardware user guides for correct wiring of the product. The product must be supplied with a stabilized voltage source and the wiring conform to the security and fire prevention regulations.

The product must be handled with care, avoiding any contact with the pins because electrostatic discharges may damage the product itself. The same caution must be taken for the SIM, checking carefully the instructions for its use. Do not insert or remove the SIM when the product is in power saving mode.

The system integrator is responsible for the functioning of the final product; therefore, care must be taken of the external components of the module, as well as of any project or installation issue, because of the risk of disturbing the GSM network or external devices or having any impact on safety. Should there be any doubt, please refer to the technical documentation and the regulations in force.

Every module must be equipped with a proper antenna with the specified characteristics. The antenna must be installed with care in order to avoid any interference with other electronic devices and must be installed with the guarantee of a minimum 20 cm distance from a human body. In case this requirement cannot be satisfied, the system integrator must assess the final product against the SAR regulation.

The European Community provides some Directives for electronic equipment introduced on the market. All the relevant information is available on the European Community website:

http://europa.eu.int/comm/enterprise/rtte/dir99-5.htm

The text of the Directive 99/05 regarding telecommunication equipment is available, while the applicable Directives (Low Voltage and EMC) are available at:

http://europa.eu.int/comm/enterprise/rtte/dir99-5.htm

The equipment is intended to be installed in restricted area locations.

The equipment must be supplied by an external limited power source in compliance with the clause 2.5 of the standard IEC 60950-1.

Ambient working temperature for the temperature test of the standard EN 60950-1: +50 ºC

Reproduction forbidden without written authorization from Telit Communications S.p.A. - All Rights Reserved.

20. Conformity assessment issues

20.1. FCC/IC Regulatory notices

20.1.1. Modification statement

Telit Communications S.p.A has not approved any changes or modifications to this device by the user. Any changes or modifications could void the user's authority to operate the equipment.

Telit Communications S.p.A n'approuve aucune modification apportée à l'appareil par l'utilisateur, quelle qu'en soit la nature. Tout changement ou modification peuvent annuler le droit d'utilisation de l'appareil par l'utilisateur.

20.1.2. Interference statement

This device complies with Part 15 of the FCC Rules and Industry Canada licence-exempt RSS standard(s). Operation is subject to the following two conditions: (1) this device may not cause interference, and (2) this device must accept any interference, including interference that may cause undesired operation of the device.

Le présent appareil est conforme aux CNR d'Industrie Canada applicables aux appareils radio exempts de licence. L'exploitation est autorisée aux deux conditions suivantes : (1) l'appareil ne doit pas produire de brouillage, et (2) l'utilisateur de l'appareil doit accepter tout brouillage radioélectrique subi, même si le brouillage est susceptible d'en compromettre le fonctionnement.

20.1.3. RF exposure

This equipment complies with FCC and IC radiation exposure limits set forth for an uncontrolled environment. The antenna should be installed and operated with minimum distance of 20 cm between the radiator and your body. Antenna gain must be below:

Frequency range	Type of antenna	Antenna gain
850 MHz band	N/A	4.37 dBi
1900 MHz band	N/A	2.11 dBi
2.4 GHz band	Half-wave dipole antenna	2.3 dBi

This transmitter must not be co-located or operating in conjunction with any other antenna or transmitter.

Reproduction forbidden without written authorization from Telit Communications S.p.A. - All Rights Reserved.

Cet appareil est conforme aux limites d'exposition aux rayonnements de la IC pour un environnement non contrôlé. L'antenne doit être installé de façon à garder une distance minimale de 20 centimètres entre la source de rayonnements et votre corps. Gain de l'antenne doit être ci-dessous:

Bande de fréquence	***Type d' antenne***	***Gain de l'antenne***
850 MHz band	*N/A*	*4.37 dBi*
1900 MHz band	*N/A*	*2.11 dBi*
2.4 GHz band	*Antenne dipole demi-onde*	*2.3 dBi*

L'émetteur ne doit pas être colocalisé ni fonctionner conjointement avec à autre antenne ou autre émetteur.

20.1.4. FCC Class B digital device notice

This equipment has been tested and found to comply with the limits for a Class B digital device, pursuant to part 15 of the FCC Rules. These limits are designed to provide reasonable protection against harmful interference in a residential installation. This equipment generates, uses and can radiate radio frequency energy and, if not installed and used in accordance with the instructions, may cause harmful interference to radio communications. However, there is no guarantee that interference will not occur in a particular installation. If this equipment does cause harmful interference to radio or television reception, which can be determined by turning the equipment off and on, the user is encouraged to try to correct the interference by one or more of the following measures:

- Reorient or relocate the receiving antenna.
- Increase the separation between the equipment and receiver.
- Connect the equipment into an outlet on a circuit different from that to which the receiver is connected.
- Consult the dealer or an experienced radio/TV technician for help.

20.1.5. Labelling Requirements for the Host device

The host device shall be properly labelled to identify the modules within the host device. The certification label of the module shall be clearly visible at all times when installed in the host device, otherwise the host device must be labelled to display the FCC ID and IC of the module, preceded by the words "Contains transmitter module", or the word "Contains", or similar wording expressing the same meaning, as follows:

Contains FCC ID: RI7HE9223GR
Contains IC: 5131A-HE9223GR

L'appareil hôte doit être étiqueté comme il faut pour permettre l'identification des modules qui s'y trouvent. L'étiquette de certification du module donné doit être posée sur l'appareil hôte à un endroit bien en vue en tout temps. En l'absence d'étiquette, l'appareil hôte doit porter une étiquette donnant le

Reproduction forbidden without written authorization from Telit Communications S.p.A. - All Rights Reserved.

FCC ID et l'IC du module, précédé des mots « Contient un module d'émission », du mot « Contient » ou d'une formulation similaire exprimant le même sens, comme suit:

Contains FCC ID: RI7HE9223GR
Contains IC: 5131A-HE9223GR

CAN ICES-3 (B) / NMB-3 (B)

This Class B digital apparatus complies with Canadian ICES-003.

Cet appareil numérique de classe B est conforme à la norme canadienne ICES-003.

20.2. 1999/5/EC Directive

This device has been evaluated against the essential requirements of the 1999/5/EC Directive.

Bulgarian	С настоящето "Telit Communications S.P.A." декларира, че "xE922-3GR module" отговаря на съществените изисквания и другите приложими изисквания на Директива 1999/5/EC.
Croatian	Ovime "Telit Communications S.P.A.", izjavljuje da je ovaj "xE922-3GR module" je u skladu s osnovnim zahtjevima i drugim relevantnim odredbama Direktive 1999/5/EC.
Czech	"Telit Communications S.P.A." tímto prohlašuje, že tento "xE922-3GR module" je ve shodě se základními požadavky a dalšími příslušnými ustanoveními směrnice 1999/5/ES.
Danish	Undertegnede "Telit Communications S.P.A." erklærer herved, at følgende udstyr "xE922-3GR module" overholder de væsentlige krav og øvrige relevante krav i direktiv 1999/5/EF.
Dutch	Hierbij verklaart "Telit Communications S.P.A." dat het toestel "xE922-3GR module" in overeenstemming is met de essentiële eisen en de andere relevante bepalingen van richtlijn 1999/5/EG.
English	Hereby, "Telit Communications S.P.A.", declares that this "xE922-3GR module" is in compliance with the essential requirements and other relevant provisions of Directive 1999/5/EC.
Estonian	Käesolevaga kinnitab "Telit Communications S.P.A." seadme "xE922-3GR module" vastavust direktiivi 1999/5/EÜ põhinõuetele ja nimetatud direktiivist tulenevatele teistele asjakohastele sätetele.
German	Hiermit erklärt "Telit Communications S.P.A.", dass sich das Gerät "xE922-3GR module" in Übereinstimmung mit den grundlegenden Anforderungen und den übrigen einschlägigen Bestimmungen der Richtlinie 1999/5/EG befindet.
Greek	ΜΕ ΤΗΝ ΠΑΡΟΥΣΑ "Telit Communications S.P.A." ΔΗΛΩΝΕΙ ΟΤΙ "xE922-3GR module" ΣΥΜΜΟΡΦΩΝΕΤΑΙ ΠΡΟΣ ΤΙΣ ΟΥΣΙΩΔΕΙΣ ΑΠΑΙΤΗΣΕΙΣ ΚΑΙ ΤΙΣ ΛΟΙΠΕΣ ΣΧΕΤΙΚΕΣ ΔΙΑΤΑΞΕΙΣ ΤΗΣ ΟΔΗΓΙΑΣ 1999/5/ΕΚ.
Hungarian	Alulírott, "Telit Communications S.P.A." nyilatkozom, hogy a "xE922-3GR module" megfelel a vonatkozó alapvetõ követelményeknek és az 1999/5/EC irányelv egyéb elõírásainak.
Finnish	"Telit Communications S.P.A." vakuuttaa täten että "xE922-3GR module" tyyppinen laite on direktiivin 1999/5/EY oleellisten vaatimusten ja sitä koskevien direktiivin muiden ehtojen mukainen.
French	Par la présente "Telit Communications S.P.A." déclare que l'appareil "xE922-3GR module" est conforme aux exigences essentielles et aux autres dispositions pertinentes de la directive 1999/5/CE.
Icelandic	Hér með lýsir "Telit Communications S.P.A." yfir því að "xE922-3GR module" er í samræmi við grunnkröfur og aðrar kröfur, sem gerðar eru í tilskipun 1999/5/EC
Italian	Con la presente "Telit Communications S.P.A." dichiara che questo "xE922-3GR module" è conforme ai requisiti essenziali ed alle altre disposizioni pertinenti stabilite dalla direttiva 1999/5/CE.
Latvian	Ar šo "Telit Communications S.P.A." deklarē, ka "xE922-3GR module" atbilst Direktīvas 1999/5/EK būtiskajām prasībām un citiem ar to saistītajiem noteikumiem.
Lithuanian	Šiuo "Telit Communications S.P.A." deklaruoja, kad šis "xE922-3GR module" atitinka esminius reikalavimus ir kitas 1999/5/EB Direktyvos nuostatas.

Reproduction forbidden without written authorization from Telit Communications S.p.A. - All Rights Reserved.

Maltese	Hawnhekk, "Telit Communications S.P.A.", jiddikjara li dan "xE922-3GR module" jikkonforma mal-ħtiġijiet essenzjali u ma provvedimenti oħrajn relevanti li hemm fid-Dirrettiva 1999/5/EC.
Norwegian	"Telit Communications S.P.A." erklærer herved at utstyret "xE922-3GR module" er i samsvar med de grunnleggende krav og øvrige relevante krav i direktiv 1999/5/EF.
Polish	Niniejszym "Telit Communications S.P.A." oświadcza, że "xE922-3GR module" jest zgodny z zasadniczymi wymogami oraz pozostałymi stosownymi postanowieniami Dyrektywy 1999/5/EC
Portuguese	"Telit Communications S.P.A." declara que este "xE922-3GR module" está conforme com os requisitos essenciais e outras disposições da Directiva 1999/5/CE.
Slovak	"Telit Communications S.P.A." týmto vyhlasuje, že "OM12030/X00" (*) spĺňa základné požiadavky a všetky príslušné ustanovenia Smernice 1999/5/ES.
Slovenian	"Telit Communications S.P.A." izjavlja, da je ta "xE922-3GR module" v skladu z bistvenimi zahtevami in ostalimi relevantnimi določili direktive 1999/5/ES.
Spanish	Por medio de la presente "Telit Communications S.P.A." declara que "xE922-3GR module" cumple con los requisitos esenciales y cualesquiera otras disposiciones aplicables o exigibles de la Directiva 1999/5/CE.
Swedish	Härmed intygar "Telit Communications S.P.A." att denna "xE922-3GR module" står I överensstämmelse med de väsentliga egenskapskrav och övriga relevanta bestämmelser som framgår av direktiv 1999/5/EG.

In order to satisfy the essential requirements of R&TTE Directive (1999/5/EC), the product is compliant with the following standards:

Electrical Safety (Art. 3(1)(a)):	EN 60950-1:2006 + A11:2009 + A1:2010 + A12:2011 + AC:2011 + A2:2013
EMF Exposure (Art. 3(1)(a)):	EN 62311:2008
EMC (Art. 3(1)(b)):	EN 301 489-1 V1.9.2 EN 301 489-3 V1.6.1 EN 301 489-7 V1.3.1 EN 301 489-17 V2.2.1 EN 301 489-24 V1.5.1
Radio Spectrum Use (Art. 3(2)):	EN 301 511 V12.1.1 EN 301 908-1 V7.1.1 EN 301 908-02 V6.2.1 ETSI EN 300 440-1 V1.6.1 ETSI EN 300 440-2 V1.4.1 ETSI EN 300 328 V1.9.1

The conformity assessment procedure referred to in Article 10 and detailed in Annex IV of Directive 1999/5/EC has been followed with the involvement of the following Notified Body:

AT4 wireless, S.A.
Parque Tecnologico de Andalucía
C/ Severo Ochoa 2
29590 Campanillas – Málaga
SPAIN
Notified Body No: 1909

Thus, the following marking is included in the product:

Reproduction forbidden without written authorization from Telit Communications S.p.A. - All Rights Reserved.

CE 1909

There is no restriction for the commercialization of this device in all the countries of the European Union.

Final product integrating this module must be assessed against essential requirements of the 1999/5/EC (R&TTE) Directive. It should be noted that assessment does not necessarily lead to testing. Telit Communications S.p.A. recommends carrying out the following assessments:

RF spectrum use (R&TTE art 3.2)	It will depend on the antenna used on the final product
EMC (R&TTE art 3.1b)	Testing
Health & Safety (R&TTE art 3.1a)	Testing

Reproduction forbidden without written authorization from Telit Communications S.p.A. - All Rights Reserved.

21. Document History

Revision	Date	Changes
0.1	2016-05-18	Draft
0.2	2016-06-03	
0.3	2016-06-10	
0.4	2016-07-19	
0.5	2016-08-17	
0.6	2016-09-29	Added typical power consumption table
0.7	2016-10-26	Update pwr consumption
0.8	2017-01-05	Update 60950 safety remarks Add Conformity Assessment Issues chapter Update on LGA pin AN8

Reproduction forbidden without written authorization from Telit Communications S.p.A. - All Rights Reserved.