Appendix B

Measurement Plots

Date/Time: 08/12/03 15:56:28

Test Laboratory: ELECTRONIC TECHNOLOGY SYSTEMS DR. GENZ GMBH
File Name: Dipol Valid.1900(h)_12.08.03.da4

Dipol Valid.1900(h)_12.08.03

DUT: Dipole 1900 MHz; Type: D1900V2; Serial: 5d025
Program: Dipol Valid 1900

Communication System: CW; Frequency: 1900 MHz;Duty Cycle: 1:1
Medium: Head 1900 MHz (σ = 1.41529 mho/m, ε_r = 39.8679, ρ = 1000 kg/m^3)
Phantom section: Flat Section

DASY4 Configuration:

- Probe: ET3DV6 - SN1711; ConvF(5.3, 5.3, 5.3); Calibrated: 11/29/2002
- Sensor-Surface: 4mm (Mechanical And Optical Surface Detection)
- Electronics: DAE3 Sn522; Calibrated: 9/11/2002
- Phantom: SAM 12; Type: TP-1217; Serial: QD000P40CA
- Measurement SW: DASY4, V4.1 Build 47; Postprocessing SW: SEMCAD, V1.6 Build 115

Dipol 1900 (17dBm)/Area Scan (81x81x1): Measurement grid: dx=10mm, dy=10mm
Reference Value = 43.4 V/m
Power Drift = 0.04 dB
Maximum value of SAR = 2.54 mW/g

Dipol 1900 (17dBm)/Zoom Scan (7x7x7)/Cube 0: Measurement grid: dx=5mm, dy=5mm, dz=5mm
Peak SAR (extrapolated) = 4.28 W/kg
SAR(1 g) = 2.12 mW/g; SAR(10 g) = 1.06 mW/g
Reference Value = 43.4 V/m
Power Drift = 0.04 dB
Maximum value of SAR = 2.59 mW/g

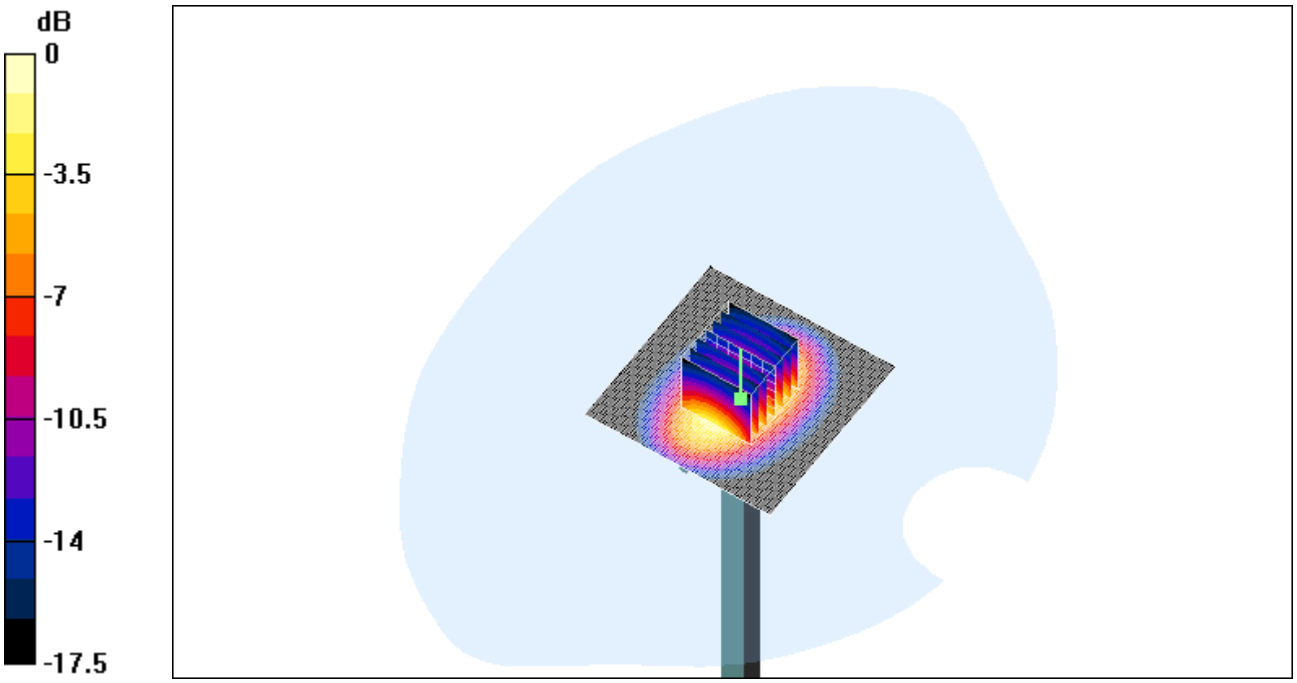

0 dB = 2.59mW/g

Date/Time: 08/13/03 13:55:52

Test Laboratory: ELECTRONIC TECHNOLOGY SYSTEMS DR. GENZ GMBH
File Name: Dipol Valid.1900(h)_13.08.03.da4

Dipol Valid.1900(h)_13.08.03

DUT: Dipole 1900 MHz; Type: D1900V2; Serial: 5d025
Program: Dipol Valid 1900

Communication System: CW; Frequency: 1900 MHz;Duty Cycle: 1:1
Medium: Head 1900 MHz (σ = 1.41529 mho/m, ε_r = 39.8679, ρ = 1000 kg/m^3)
Phantom section: Flat Section

DASY4 Configuration:

- Probe: ET3DV6 - SN1711; ConvF(5.3, 5.3, 5.3); Calibrated: 11/29/2002
- Sensor-Surface: 4mm (Mechanical And Optical Surface Detection)
- Electronics: DAE3 Sn522; Calibrated: 9/11/2002
- Phantom: SAM 12; Type: TP-1217; Serial: QD000P40CA
- Measurement SW: DASY4, V4.1 Build 47; Postprocessing SW: SEMCAD, V1.6 Build 115

Dipol 1900 (17dBm)/Area Scan (81x81x1): Measurement grid: dx=10mm, dy=10mm
Reference Value = 43.3 V/m
Power Drift = 0.05 dB
Maximum value of SAR = 2.54 mW/g

Dipol 1900 (17dBm)/Zoom Scan (7x7x7)/Cube 0: Measurement grid: dx=5mm, dy=5mm, dz=5mm
Peak SAR (extrapolated) = 4.28 W/kg
SAR(1 g) = 2.11 mW/g; SAR(10 g) = 1.05 mW/g
Reference Value = 43.3 V/m
Power Drift = 0.05 dB
Maximum value of SAR = 2.58 mW/g

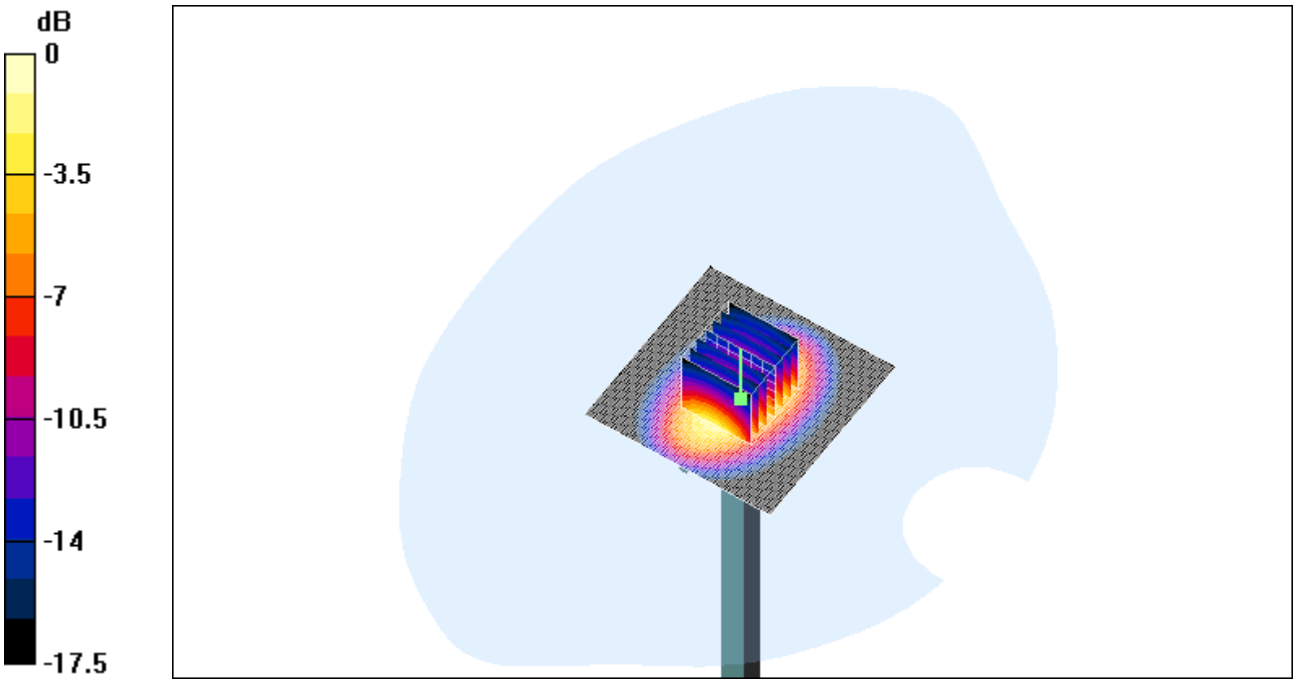

0 dB = 2.58mW/g

Date/Time: 08/19/03 7:25:42

Test Laboratory: ELECTRONIC TECHNOLOGY SYSTEMS DR. GENZ GMBH
File Name: Dipol Valid.1900 (m)_19.08.03.da4

Dipol Valid.1900 (m)_19.08.03

DUT: Dipole 1900 MHz; Type: D1900V2; Serial: 5d025
Program: Dipol Valid 1900

Communication System: CW; Frequency: 1900 MHz;Duty Cycle: 1:1
Medium: Muscle 1900 MHz (σ = 1.58 mho/m, ε_r = 51.02, ρ = 1000 kg/m^3)
Phantom section: Flat Section

DASY4 Configuration:

- Probe: ET3DV6 - SN1711; ConvF(5, 5, 5); Calibrated: 11/29/2002
- Sensor-Surface: 4mm (Mechanical And Optical Surface Detection)
- Electronics: DAE3 Sn522; Calibrated: 9/11/2002
- Phantom: SAM 12; Type: TP-1217; Serial: QD000P40CA
- Measurement SW: DASY4, V4.1 Build 47; Postprocessing SW: SEMCAD, V1.6 Build 115

Dipol 1900 (17dBm)/Area Scan (81x81x1): Measurement grid: dx=10mm, dy=10mm
Reference Value = 42.1 V/m
Power Drift = 0.04 dB
Maximum value of SAR = 2.55 mW/g

Dipol 1900 (17dBm)/Zoom Scan (7x7x7)/Cube 0: Measurement grid: dx=5mm, dy=5mm, dz=5mm
Peak SAR (extrapolated) = 4.16 W/kg
SAR(1 g) = 2.05 mW/g; SAR(10 g) = 1.04 mW/g
Reference Value = 42.1 V/m
Power Drift = 0.04 dB
Maximum value of SAR = 2.55 mW/g

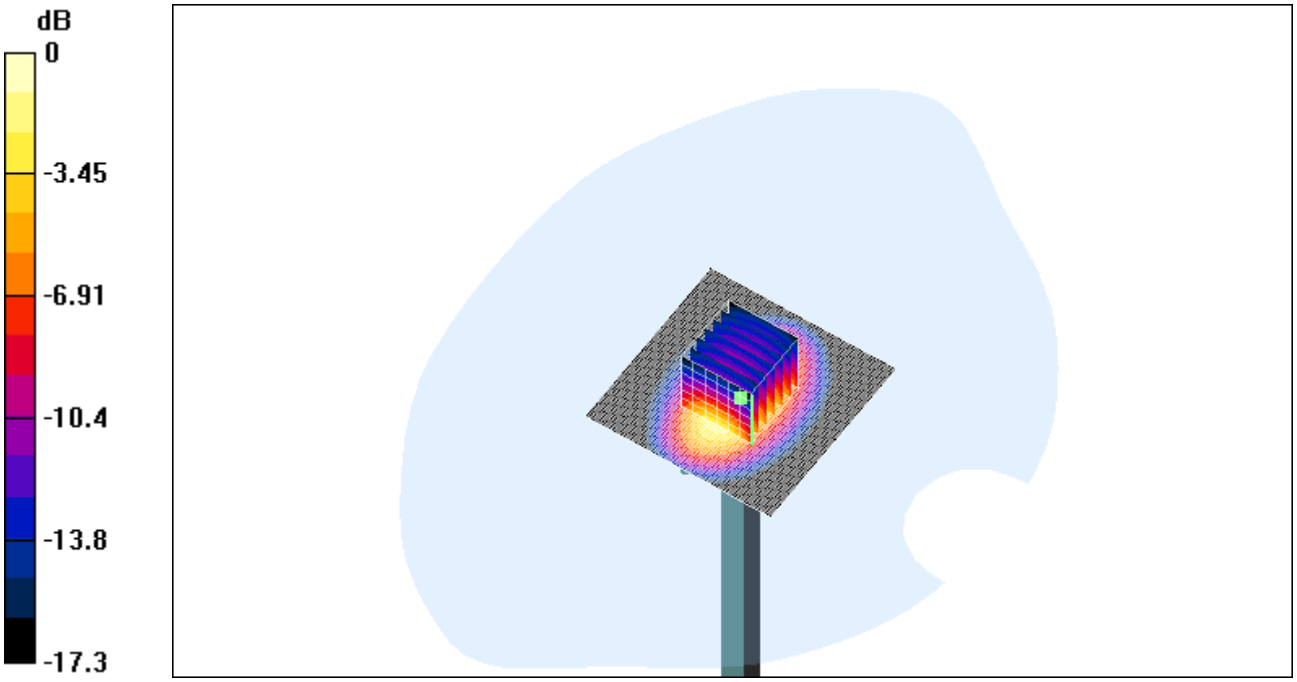

0 dB = 2.55mW/g

Date/Time: 08/13/03 18:17:08

Test Laboratory: ELECTRONIC TECHNOLOGY SYSTEMS DR. GENZ GMBH
File Name: 1900_right_ch512_cheek.da4

1900_right_ch512_cheek

DUT: E-GSM900/GSM1800/GSM1900 Triple Band GPRS Terminal Equipment; Type: -; Serial: I-2000
Program: GSM 1900

Communication System: GSM 1900; Frequency: 1850.2 MHz;Duty Cycle: 1:8
Medium: Head 1900 MHz (σ = 1.3685 mho/m, ε_r = 39.9283, ρ = 1000 kg/m^3)
Phantom section: Right Section

DASY4 Configuration:

- Probe: ET3DV6 - SN1711; ConvF(5.3, 5.3, 5.3); Calibrated: 11/29/2002
- Sensor-Surface: 4mm (Mechanical And Optical Surface Detection)
- Electronics: DAE3 Sn522; Calibrated: 9/11/2002
- Phantom: SAM 12; Type: TP-1217; Serial: QD000P40CA
- Measurement SW: DASY4, V4.1 Build 47; Postprocessing SW: SEMCAD, V1.6 Build 115

right_ch512/Area Scan (81x141x1): Measurement grid: dx=10mm, dy=10mm
Reference Value = 6.54 V/m
Power Drift = -0.01 dB
Maximum value of SAR = 1.63 mW/g

right_ch512/Zoom Scan (7x7x7)/Cube 0: Measurement grid: dx=5mm, dy=5mm, dz=5mm
Peak SAR (extrapolated) = 2.48 W/kg
SAR(1 g) = 1.39 mW/g; SAR(10 g) = 0.671 mW/g
Reference Value = 6.54 V/m
Power Drift = -0.01 dB
Maximum value of SAR = 1.56 mW/g

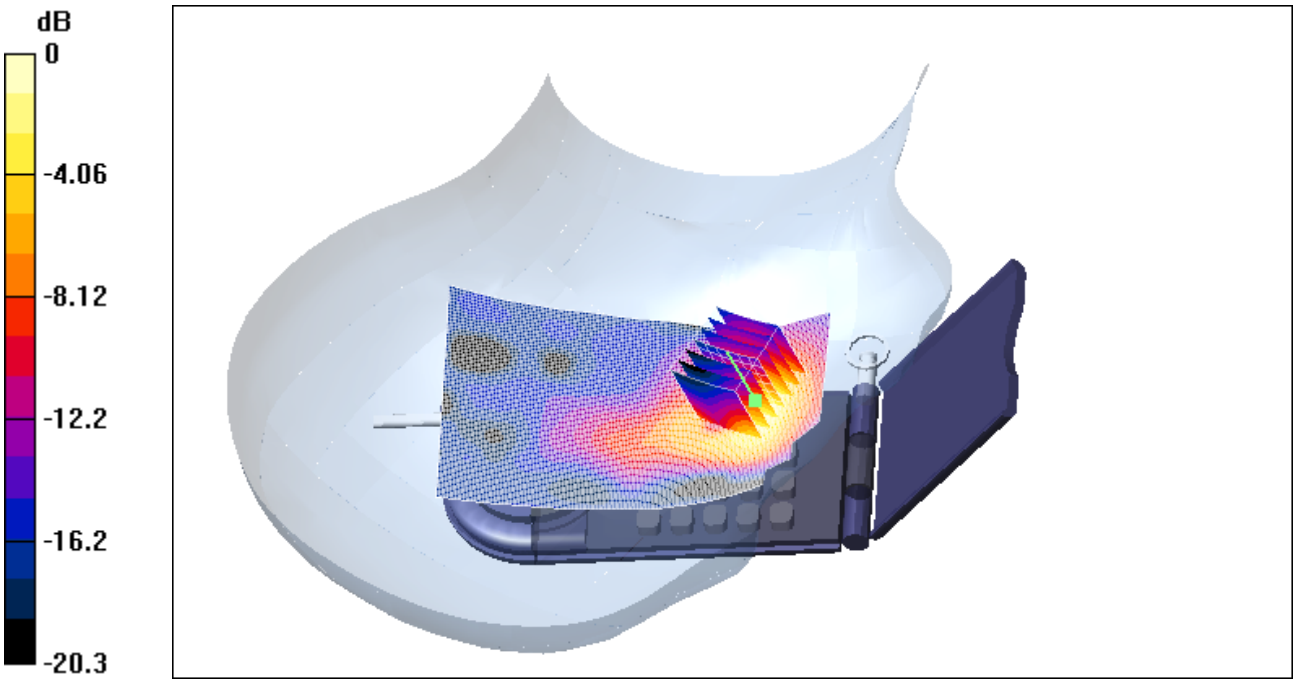

0 dB = 1.56mW/g

Date/Time: 08/13/03 13:58:16

Test Laboratory: ELECTRONIC TECHNOLOGY SYSTEMS DR. GENZ GMBH
File Name: 1900_right_ch512_tilted.da4

1900_right_ch512_tilted

DUT: E-GSM900/GSM1800/GSM1900 Triple Band GPRS Terminal Equipment; Type: -; Serial: I-2000
Program: GSM 1900

Communication System: GSM 1900; Frequency: 1850.2 MHz;Duty Cycle: 1:8
Medium: Head 1900 MHz (σ = 1.3685 mho/m, ε_r = 39.9283, ρ = 1000 kg/m^3)
Phantom section: Right Section

DASY4 Configuration:

- Probe: ET3DV6 - SN1711; ConvF(5.3, 5.3, 5.3); Calibrated: 11/29/2002
- Sensor-Surface: 4mm (Mechanical And Optical Surface Detection)
- Electronics: DAE3 Sn522; Calibrated: 9/11/2002
- Phantom: SAM 12; Type: TP-1217; Serial: QD000P40CA
- Measurement SW: DASY4, V4.1 Build 47; Postprocessing SW: SEMCAD, V1.6 Build 115

right_ch512/Area Scan (101x141x1): Measurement grid: dx=10mm, dy=10mm
Reference Value = 4.56 V/m
Power Drift = -0.09 dB
Maximum value of SAR = 0.0602 mW/g

right_ch512/Zoom Scan (7x7x7)/Cube 0: Measurement grid: dx=5mm, dy=5mm, dz=5mm
Peak SAR (extrapolated) = 0.0867 W/kg
SAR(1 g) = 0.0552 mW/g; SAR(10 g) = 0.0354 mW/g
Reference Value = 4.56 V/m
Power Drift = -0.09 dB
Maximum value of SAR = 0.0595 mW/g

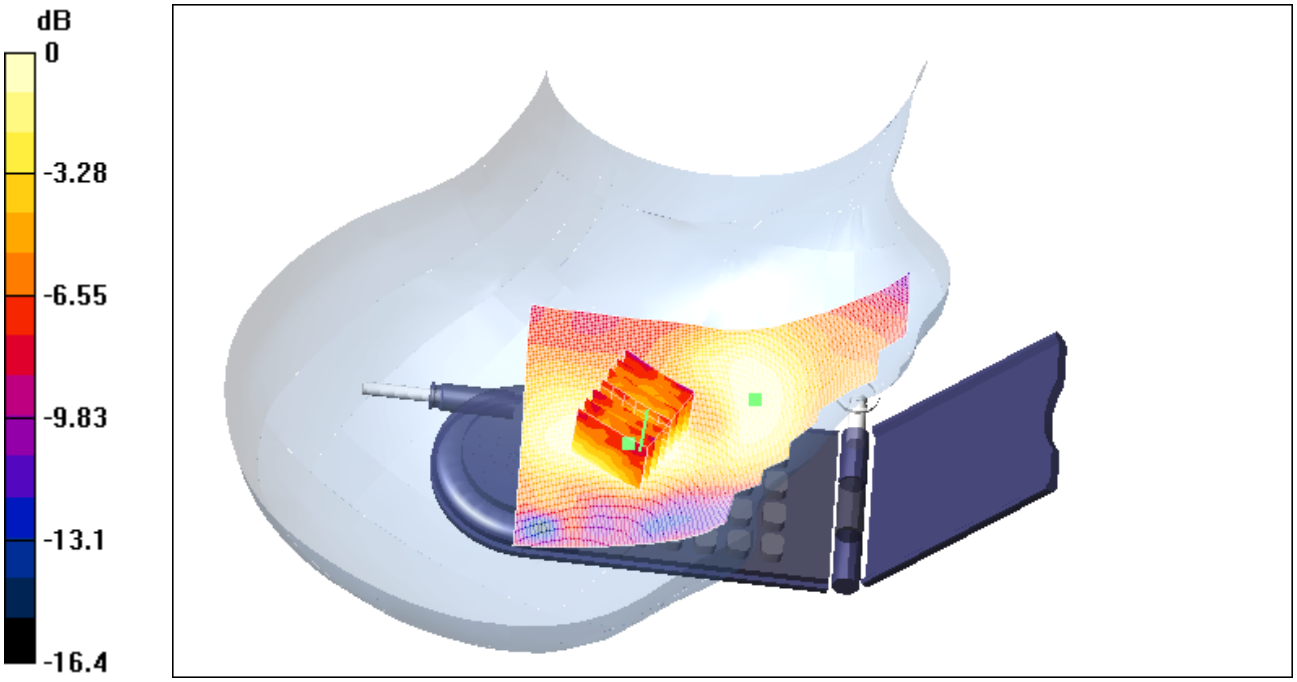

0 dB = 0.0474mW/g

Date/Time: 08/13/03 17:08:53

Test Laboratory: ELECTRONIC TECHNOLOGY SYSTEMS DR. GENZ GMBH
File Name: 1900_right_ch661_cheek.da4

1900_right_ch661_cheek

DUT: E-GSM900/GSM1800/GSM1900 Triple Band GPRS Terminal Equipment; Type: -; Serial: I-2000
Program: GSM 1900

Communication System: GSM 1900; Frequency: 1880 MHz;Duty Cycle: 1:8
Medium: Head 1900 MHz (σ = 1.39732 mho/m, ε_r = 39.9416, ρ = 1000 kg/m^3)
Phantom section: Right Section

DASY4 Configuration:

- Probe: ET3DV6 - SN1711; ConvF(5.3, 5.3, 5.3); Calibrated: 11/29/2002
- Sensor-Surface: 4mm (Mechanical And Optical Surface Detection)
- Electronics: DAE3 Sn522; Calibrated: 9/11/2002
- Phantom: SAM 12; Type: TP-1217; Serial: QD000P40CA
- Measurement SW: DASY4, V4.1 Build 47; Postprocessing SW: SEMCAD, V1.6 Build 115

right_ch661/Area Scan (81x141x1): Measurement grid: dx=10mm, dy=10mm
Reference Value = 6.37 V/m
Power Drift = -0.03 dB
Maximum value of SAR = 1.35 mW/g

right_ch661/Zoom Scan (7x7x7)/Cube 0: Measurement grid: dx=5mm, dy=5mm, dz=5mm
Peak SAR (extrapolated) = 2.15 W/kg
SAR(1 g) = 1.18 mW/g; SAR(10 g) = 0.564 mW/g
Reference Value = 6.37 V/m
Power Drift = -0.03 dB
Maximum value of SAR = 1.34 mW/g

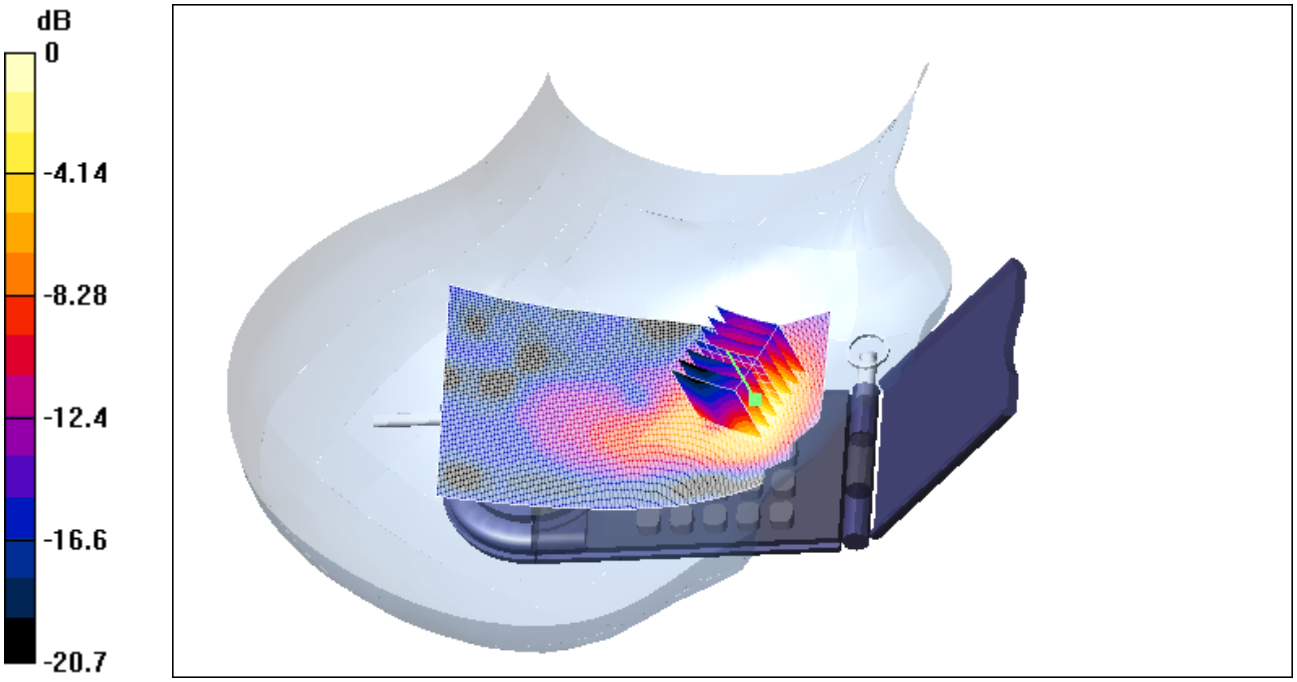

0 dB = 1.34mW/g

Date/Time: 08/13/03 14:50:30

Test Laboratory: ELECTRONIC TECHNOLOGY SYSTEMS DR. GENZ GMBH
File Name: 1900_right_ch661_tilted.da4

1900_right_ch661_tilted

DUT: E-GSM900/GSM1800/GSM1900 Triple Band GPRS Terminal Equipment; Type: -; Serial: I-2000
Program: GSM 1900

Communication System: GSM 1900; Frequency: 1880 MHz;Duty Cycle: 1:8
Medium: Head 1900 MHz (σ = 1.39732 mho/m, ε_r = 39.9416, ρ = 1000 kg/m^3)
Phantom section: Right Section

DASY4 Configuration:

- Probe: ET3DV6 - SN1711; ConvF(5.3, 5.3, 5.3); Calibrated: 11/29/2002
- Sensor-Surface: 4mm (Mechanical And Optical Surface Detection)
- Electronics: DAE3 Sn522; Calibrated: 9/11/2002
- Phantom: SAM 12; Type: TP-1217; Serial: QD000P40CA
- Measurement SW: DASY4, V4.1 Build 47; Postprocessing SW: SEMCAD, V1.6 Build 115

right_ch661/Area Scan (101x141x1): Measurement grid: dx=10mm, dy=10mm
Reference Value = 4.11 V/m
Power Drift = -0.08 dB
Maximum value of SAR = 0.0462 mW/g

right_ch661/Zoom Scan (7x7x7)/Cube 0: Measurement grid: dx=5mm, dy=5mm, dz=5mm
Peak SAR (extrapolated) = 0.0653 W/kg
SAR(1 g) = 0.0418 mW/g; SAR(10 g) = 0.027 mW/g
Reference Value = 4.11 V/m
Power Drift = -0.08 dB
Maximum value of SAR = 0.045 mW/g

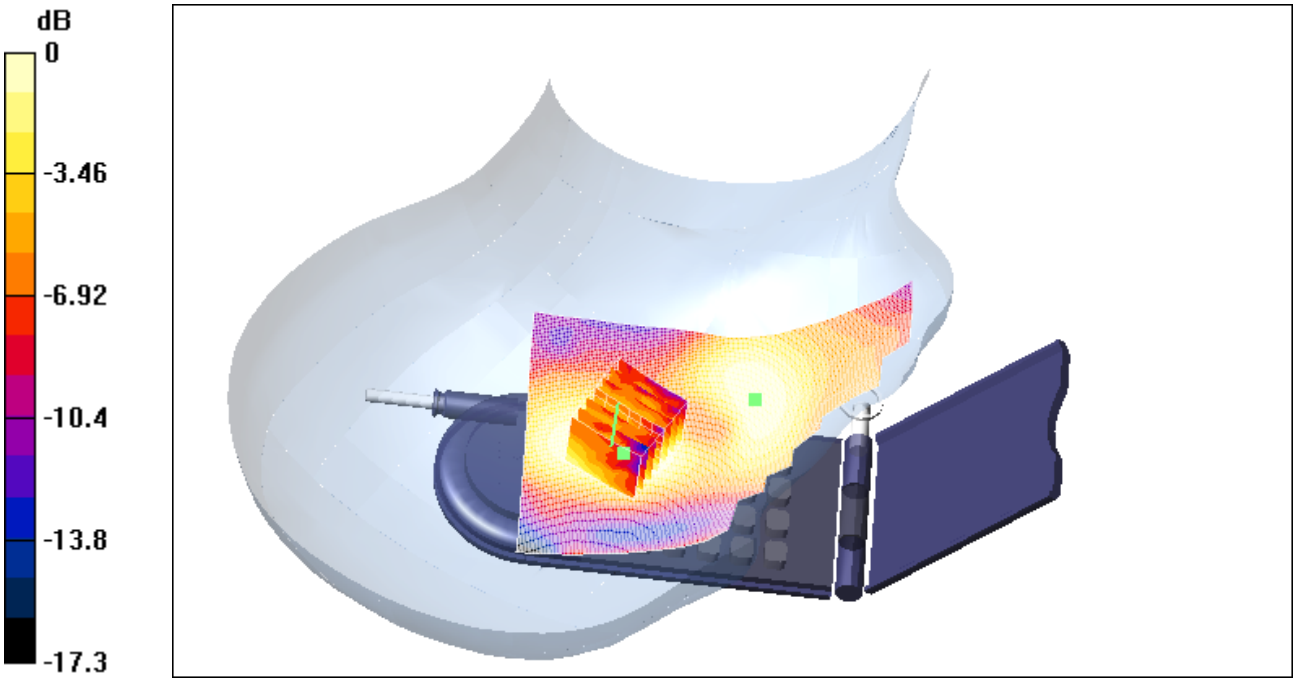

0 dB = 0.0374mW/g

Date/Time: 08/13/03 17:43:38

Test Laboratory: ELECTRONIC TECHNOLOGY SYSTEMS DR. GENZ GMBH
File Name: 1900_right_ch810_cheek.da4

1900_right_ch810_cheek

DUT: E-GSM900/GSM1800/GSM1900 Triple Band GPRS Terminal Equipment; Type: -; Serial: I-2000
Program: GSM 1900

Communication System: GSM 1900; Frequency: 1909.8 MHz;Duty Cycle: 1:8
Medium: Head 1900 MHz (σ = 1.4255 mho/m, ε_r = 39.78, ρ = 1000 kg/m^3)
Phantom section: Right Section

DASY4 Configuration:

- Probe: ET3DV6 - SN1711; ConvF(5.3, 5.3, 5.3); Calibrated: 11/29/2002
- Sensor-Surface: 4mm (Mechanical And Optical Surface Detection)
- Electronics: DAE3 Sn522; Calibrated: 9/11/2002
- Phantom: SAM 12; Type: TP-1217; Serial: QD000P40CA
- Measurement SW: DASY4, V4.1 Build 47; Postprocessing SW: SEMCAD, V1.6 Build 115

right_ch810/Area Scan (81x141x1): Measurement grid: dx=10mm, dy=10mm
Reference Value = 6.28 V/m
Power Drift = -0.01 dB
Maximum value of SAR = 1.05 mW/g

right_ch810/Zoom Scan (7x7x7)/Cube 0: Measurement grid: dx=5mm, dy=5mm, dz=5mm
Peak SAR (extrapolated) = 1.67 W/kg
SAR(1 g) = 0.924 mW/g; SAR(10 g) = 0.443 mW/g
Reference Value = 6.28 V/m
Power Drift = -0.01 dB
Maximum value of SAR = 1.04 mW/g

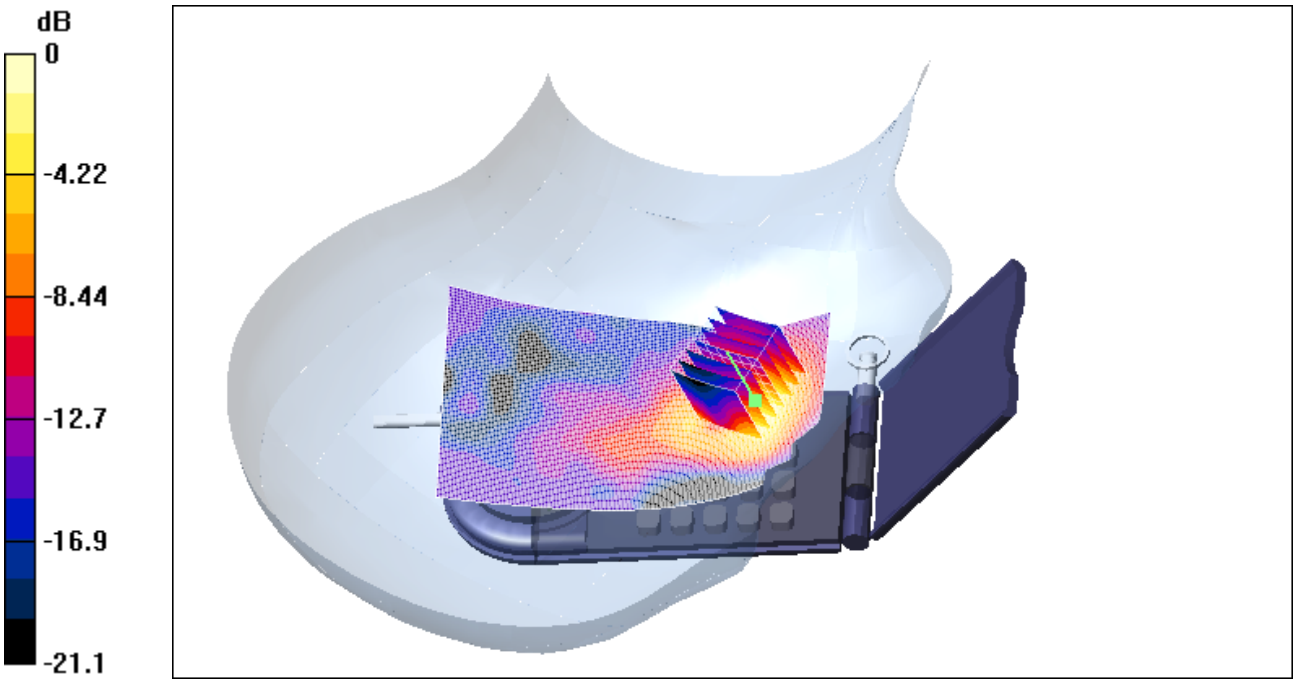

0 dB = 1.04mW/g

Date/Time: 08/13/03 15:48:46

Test Laboratory: ELECTRONIC TECHNOLOGY SYSTEMS DR. GENZ GMBH
File Name: 1900_right_ch810_tilted.da4

1900_right_ch810_tilted

DUT: E-GSM900/GSM1800/GSM1900 Triple Band GPRS Terminal Equipment; Type: -; Serial: I-2000
Program: GSM 1900

Communication System: GSM 1900; Frequency: 1909.8 MHz;Duty Cycle: 1:8
Medium: Head 1900 MHz (σ = 1.4255 mho/m, ε_r = 39.78, ρ = 1000 kg/m^3)
Phantom section: Right Section

DASY4 Configuration:

- Probe: ET3DV6 - SN1711; ConvF(5.3, 5.3, 5.3); Calibrated: 11/29/2002
- Sensor-Surface: 4mm (Mechanical And Optical Surface Detection)
- Electronics: DAE3 Sn522; Calibrated: 9/11/2002
- Phantom: SAM 12; Type: TP-1217; Serial: QD000P40CA
- Measurement SW: DASY4, V4.1 Build 47; Postprocessing SW: SEMCAD, V1.6 Build 115

right_ch810/Area Scan (101x141x1): Measurement grid: dx=10mm, dy=10mm
Reference Value = 4 V/m
Power Drift = -0.01 dB
Maximum value of SAR = 0.0394 mW/g

right_ch810/Zoom Scan (7x7x7)/Cube 0: Measurement grid: dx=5mm, dy=5mm, dz=5mm
Peak SAR (extrapolated) = 0.0537 W/kg
SAR(1 g) = 0.0346 mW/g; SAR(10 g) = 0.0228 mW/g
Reference Value = 4 V/m
Power Drift = -0.01 dB
Maximum value of SAR = 0.0377 mW/g

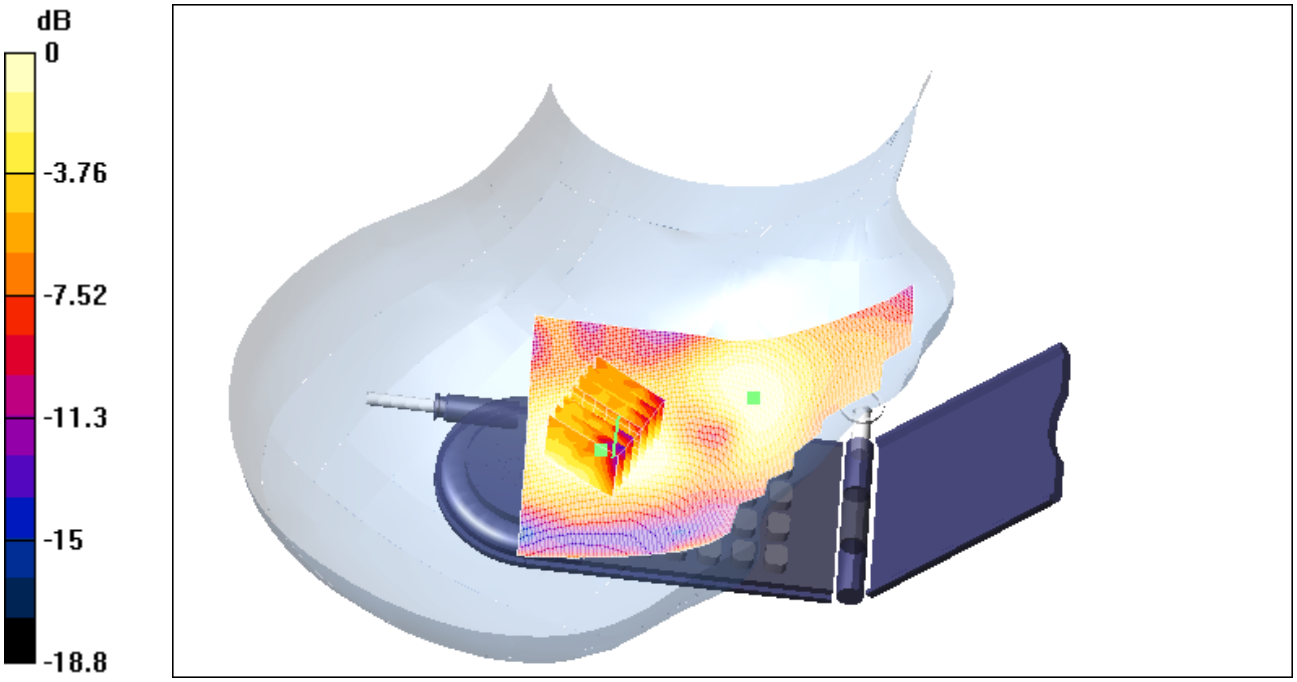

0 dB = 0.0297mW/g

Date/Time: 08/12/03 17:28:43

Test Laboratory: ELECTRONIC TECHNOLOGY SYSTEMS DR. GENZ GMBH
File Name: 1900_left_ch512_cheek.da4

1900_left_ch512_cheek

DUT: E-GSM900/GSM1800/GSM1900 Triple Band GPRS Terminal Equipment; Type: -; Serial: I-2000
Program: GSM 1900

Communication System: GSM 1900; Frequency: 1850.2 MHz;Duty Cycle: 1:8
Medium: Head 1900 MHz (σ = 1.3685 mho/m, ε_r = 39.9283, ρ = 1000 kg/m^3)
Phantom section: Left Section

DASY4 Configuration:

- Probe: ET3DV6 - SN1711; ConvF(5.3, 5.3, 5.3); Calibrated: 11/29/2002
- Sensor-Surface: 4mm (Mechanical And Optical Surface Detection)
- Electronics: DAE3 Sn522; Calibrated: 9/11/2002
- Phantom: SAM 12; Type: TP-1217; Serial: QD000P40CA
- Measurement SW: DASY4, V4.1 Build 47; Postprocessing SW: SEMCAD, V1.6 Build 115

left_ch512/Area Scan (101x141x1): Measurement grid: dx=10mm, dy=10mm
Reference Value = 6.94 V/m
Power Drift = -0.01 dB
Maximum value of SAR = 0.786 mW/g

left_ch512/Zoom Scan (7x7x7)/Cube 0: Measurement grid: dx=5mm, dy=5mm, dz=5mm
Peak SAR (extrapolated) = 1.52 W/kg
SAR(1 g) = 0.739 mW/g; SAR(10 g) = 0.366 mW/g
Reference Value = 6.94 V/m
Power Drift = -0.01 dB
Maximum value of SAR = 0.807 mW/g

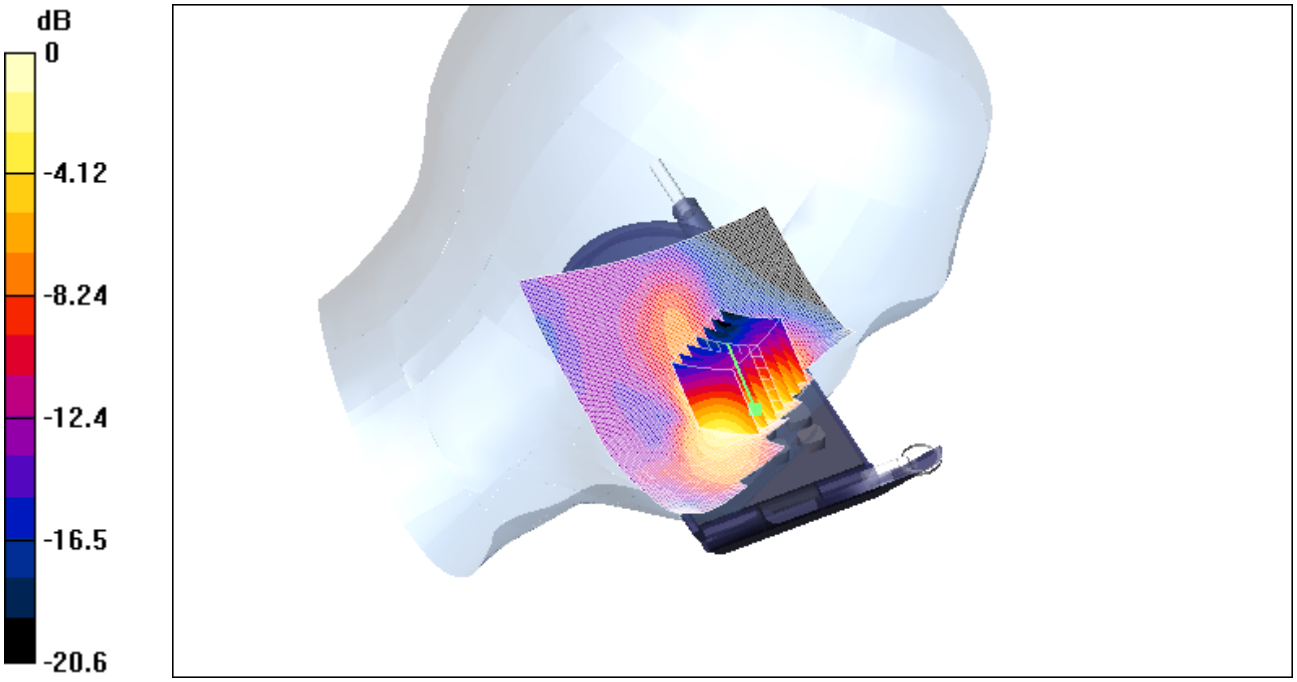

0 dB = 0.807mW/g

Date/Time: 08/12/03 21:23:39

Test Laboratory: ELECTRONIC TECHNOLOGY SYSTEMS DR. GENZ GMBH
File Name: 1900_left_ch512_tilted.da4

1900_left_ch512_tilted

DUT: E-GSM900/GSM1800/GSM1900 Triple Band GPRS Terminal Equipment; Type: -; Serial: I-2000
Program: GSM 1900

Communication System: GSM 1900; Frequency: 1850.2 MHz;Duty Cycle: 1:8
Medium: Head 1900 MHz (σ = 1.3685 mho/m, ε_r = 39.9283, ρ = 1000 kg/m^3)
Phantom section: Left Section

DASY4 Configuration:

- Probe: ET3DV6 - SN1711; ConvF(5.3, 5.3, 5.3); Calibrated: 11/29/2002
- Sensor-Surface: 4mm (Mechanical And Optical Surface Detection)
- Electronics: DAE3 Sn522; Calibrated: 9/11/2002
- Phantom: SAM 12; Type: TP-1217; Serial: QD000P40CA
- Measurement SW: DASY4, V4.1 Build 47; Postprocessing SW: SEMCAD, V1.6 Build 115

left_ch512/Area Scan (101x141x1): Measurement grid: dx=10mm, dy=10mm
Reference Value = 4.58 V/m
Power Drift = 0.06 dB
Maximum value of SAR = 0.0555 mW/g

left_ch512/Zoom Scan (7x7x7)/Cube 0: Measurement grid: dx=5mm, dy=5mm, dz=5mm
Peak SAR (extrapolated) = 0.0788 W/kg
SAR(1 g) = 0.05 mW/g; SAR(10 g) = 0.0318 mW/g
Reference Value = 4.58 V/m
Power Drift = 0.06 dB
Maximum value of SAR = 0.0547 mW/g

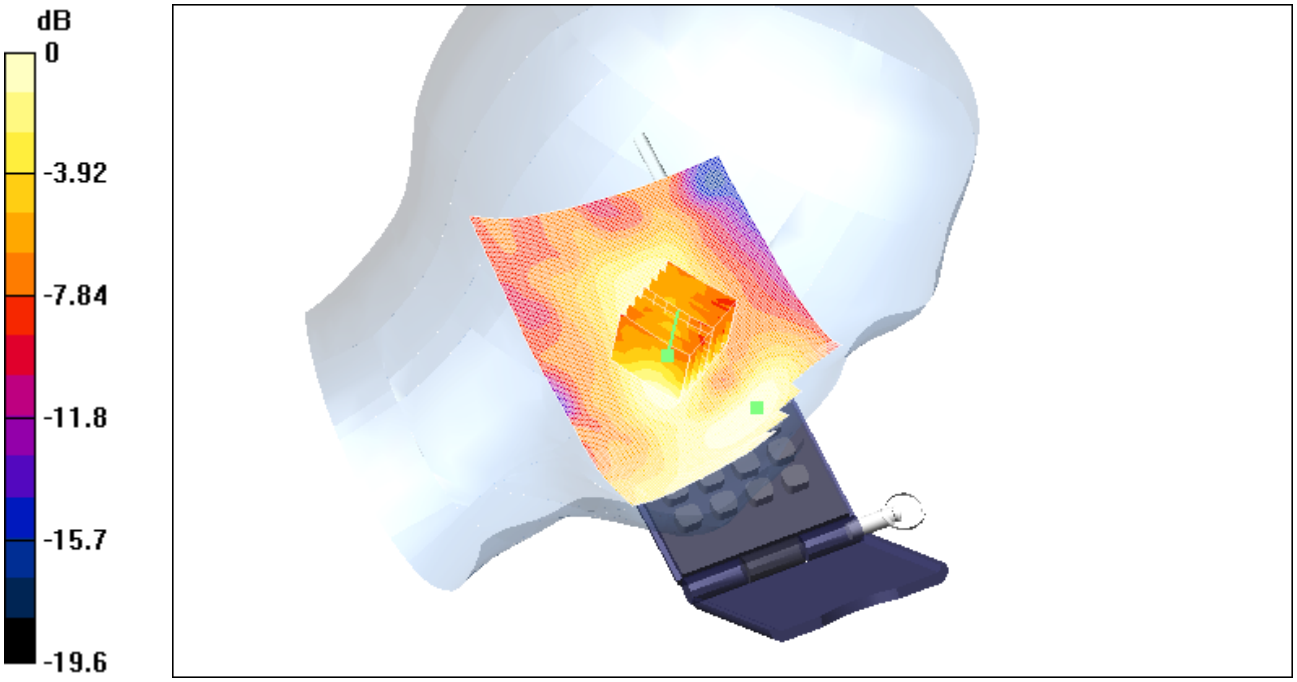

0 dB = 0.0442mW/g

Date/Time: 08/12/03 18:11:10

Test Laboratory: ELECTRONIC TECHNOLOGY SYSTEMS DR. GENZ GMBH
File Name: 1900_left_ch661_cheek.da4

1900_left_ch661_cheek

DUT: E-GSM900/GSM1800/GSM1900 Triple Band GPRS Terminal Equipment; Type: -; Serial: I-2000
Program: GSM 1900

Communication System: GSM 1900; Frequency: 1880 MHz;Duty Cycle: 1:8
Medium: Head 1900 MHz (σ = 1.39732 mho/m, ε_r = 39.9416, ρ = 1000 kg/m^3)
Phantom section: Left Section

DASY4 Configuration:

- Probe: ET3DV6 - SN1711; ConvF(5.3, 5.3, 5.3); Calibrated: 11/29/2002
- Sensor-Surface: 4mm (Mechanical And Optical Surface Detection)
- Electronics: DAE3 Sn522; Calibrated: 9/11/2002
- Phantom: SAM 12; Type: TP-1217; Serial: QD000P40CA
- Measurement SW: DASY4, V4.1 Build 47; Postprocessing SW: SEMCAD, V1.6 Build 115

left_ch661/Area Scan (101x141x1): Measurement grid: dx=10mm, dy=10mm
Reference Value = 6.7 V/m
Power Drift = -0.06 dB
Maximum value of SAR = 0.808 mW/g

left_ch661/Zoom Scan (7x7x7)/Cube 0: Measurement grid: dx=5mm, dy=5mm, dz=5mm
Peak SAR (extrapolated) = 1.54 W/kg
SAR(1 g) = 0.752 mW/g; SAR(10 g) = 0.371 mW/g
Reference Value = 6.7 V/m
Power Drift = -0.06 dB
Maximum value of SAR = 0.834 mW/g

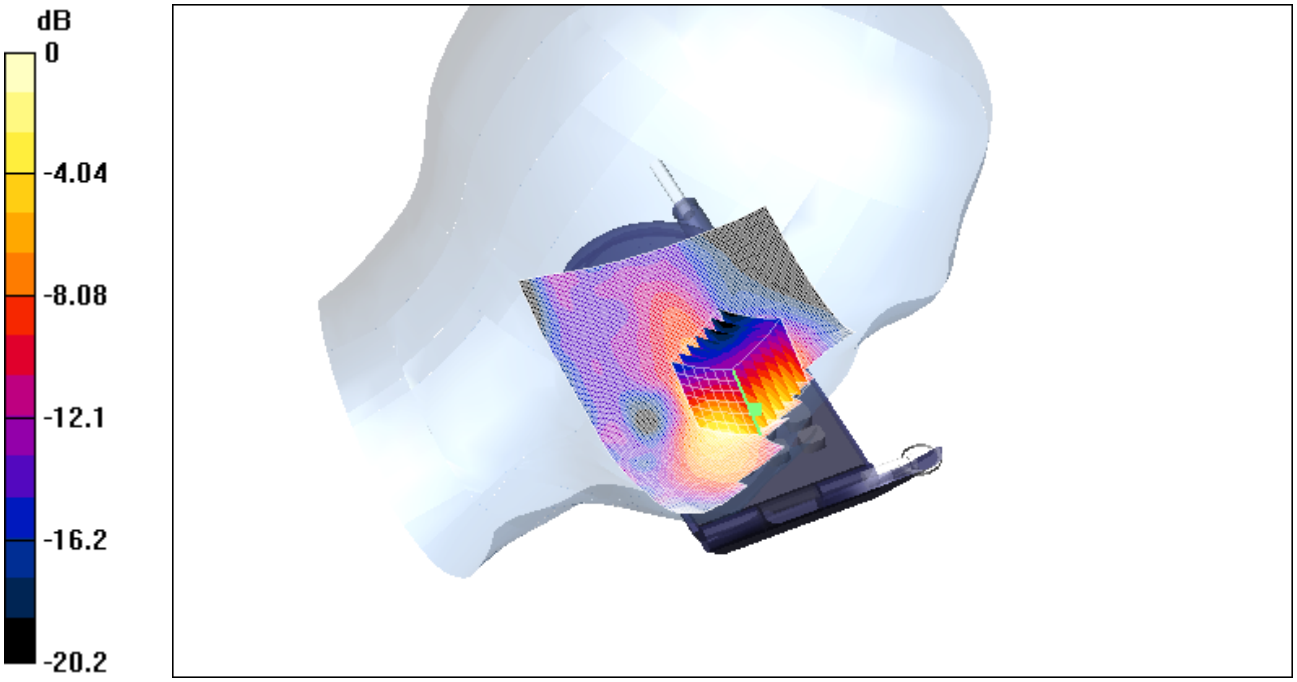

0 dB = 0.834mW/g

Date/Time: 08/12/03 20:29:40

Test Laboratory: ELECTRONIC TECHNOLOGY SYSTEMS DR. GENZ GMBH
File Name: 1900_left_ch661_tilted.da4

1900_left_ch661_tilted

DUT: E-GSM900/GSM1800/GSM1900 Triple Band GPRS Terminal Equipment; Type: -; Serial: I-2000
Program: GSM 1900

Communication System: GSM 1900; Frequency: 1880 MHz;Duty Cycle: 1:8
Medium: Head 1900 MHz (σ = 1.39732 mho/m, ε_r = 39.9416, ρ = 1000 kg/m^3)
Phantom section: Left Section

DASY4 Configuration:

- Probe: ET3DV6 - SN1711; ConvF(5.3, 5.3, 5.3); Calibrated: 11/29/2002
- Sensor-Surface: 4mm (Mechanical And Optical Surface Detection)
- Electronics: DAE3 Sn522; Calibrated: 9/11/2002
- Phantom: SAM 12; Type: TP-1217; Serial: QD000P40CA
- Measurement SW: DASY4, V4.1 Build 47; Postprocessing SW: SEMCAD, V1.6 Build 115

left_ch661/Area Scan (101x141x1): Measurement grid: dx=10mm, dy=10mm
Reference Value = 4.56 V/m
Power Drift = -0.05 dB
Maximum value of SAR = 0.0392 mW/g

left_ch661/Zoom Scan (7x7x7)/Cube 0: Measurement grid: dx=5mm, dy=5mm, dz=5mm
Peak SAR (extrapolated) = 0.0613 W/kg
SAR(1 g) = 0.0397 mW/g; SAR(10 g) = 0.0261 mW/g
Reference Value = 4.56 V/m
Power Drift = -0.05 dB
Maximum value of SAR = 0.0421 mW/g

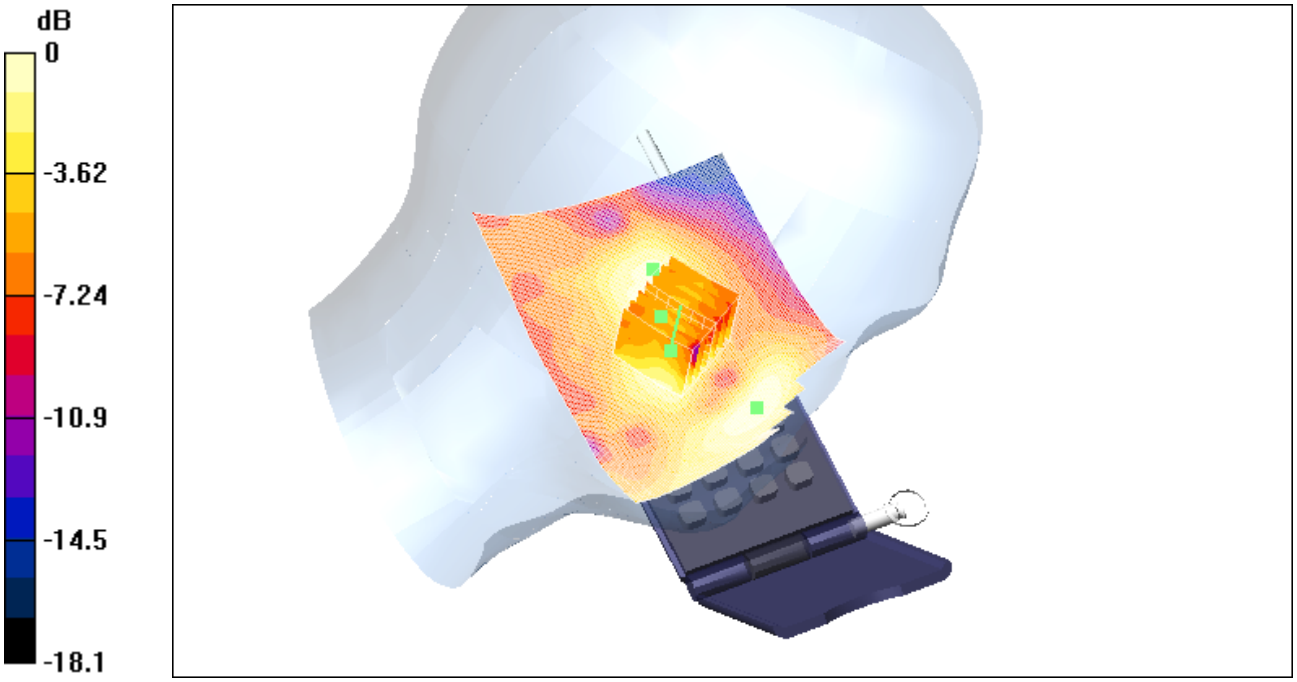

0 dB = 0.0357mW/g

Date/Time: 08/12/03 18:45:29

Test Laboratory: ELECTRONIC TECHNOLOGY SYSTEMS DR. GENZ GMBH
File Name: 1900_left_ch810_cheek.da4

1900_left_ch810_cheek

DUT: E-GSM900/GSM1800/GSM1900 Triple Band GPRS Terminal Equipment; Type: -; Serial: I-2000
Program: GSM 1900

Communication System: GSM 1900; Frequency: 1909.8 MHz;Duty Cycle: 1:8
Medium: Head 1900 MHz (σ = 1.4255 mho/m, ε_r = 39.78, ρ = 1000 kg/m^3)
Phantom section: Left Section

DASY4 Configuration:

- Probe: ET3DV6 - SN1711; ConvF(5.3, 5.3, 5.3); Calibrated: 11/29/2002
- Sensor-Surface: 4mm (Mechanical And Optical Surface Detection)
- Electronics: DAE3 Sn522; Calibrated: 9/11/2002
- Phantom: SAM 12; Type: TP-1217; Serial: QD000P40CA
- Measurement SW: DASY4, V4.1 Build 47; Postprocessing SW: SEMCAD, V1.6 Build 115

left_ch810/Area Scan (101x141x1): Measurement grid: dx=10mm, dy=10mm
Reference Value = 6.83 V/m
Power Drift = -0.01 dB
Maximum value of SAR = 0.815 mW/g

left_ch810/Zoom Scan (7x7x7)/Cube 0: Measurement grid: dx=5mm, dy=5mm, dz=5mm
Peak SAR (extrapolated) = 1.22 W/kg
SAR(1 g) = 0.596 mW/g; SAR(10 g) = 0.29 mW/g
Reference Value = 6.83 V/m
Power Drift = -0.01 dB
Maximum value of SAR = 0.672 mW/g

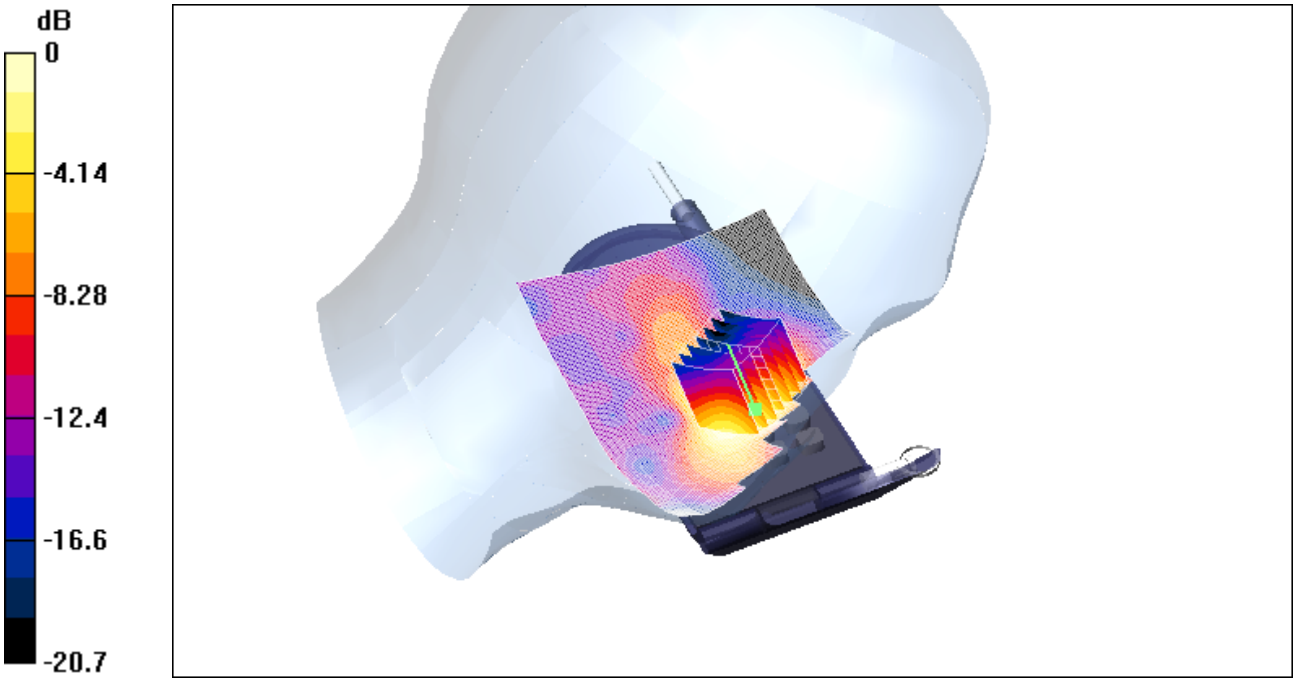

0 dB = 0.672mW/g

Date/Time: 08/12/03 19:37:12

Test Laboratory: ELECTRONIC TECHNOLOGY SYSTEMS DR. GENZ GMBH
File Name: 1900_left_ch810_tilted.da4

1900_left_ch810_tilted

DUT: E-GSM900/GSM1800/GSM1900 Triple Band GPRS Terminal Equipment; Type: -; Serial: I-2000
Program: GSM 1900

Communication System: GSM 1900; Frequency: 1909.8 MHz;Duty Cycle: 1:8
Medium: Head 1900 MHz (σ = 1.4255 mho/m, ε_r = 39.78, ρ = 1000 kg/m^3)
Phantom section: Left Section

DASY4 Configuration:

- Probe: ET3DV6 - SN1711; ConvF(5.3, 5.3, 5.3); Calibrated: 11/29/2002
- Sensor-Surface: 4mm (Mechanical And Optical Surface Detection)
- Electronics: DAE3 Sn522; Calibrated: 9/11/2002
- Phantom: SAM 12; Type: TP-1217; Serial: QD000P40CA
- Measurement SW: DASY4, V4.1 Build 47; Postprocessing SW: SEMCAD, V1.6 Build 115

left_ch810/Area Scan (101x141x1): Measurement grid: dx=10mm, dy=10mm
Reference Value = 4.41 V/m
Power Drift = 0.09 dB
Maximum value of SAR = 0.034 mW/g

left_ch810/Zoom Scan (7x7x7)/Cube 0: Measurement grid: dx=5mm, dy=5mm, dz=5mm
Peak SAR (extrapolated) = 0.0503 W/kg
SAR(1 g) = 0.0302 mW/g; SAR(10 g) = 0.0205 mW/g
Reference Value = 4.41 V/m
Power Drift = 0.09 dB
Maximum value of SAR = 0.0335 mW/g

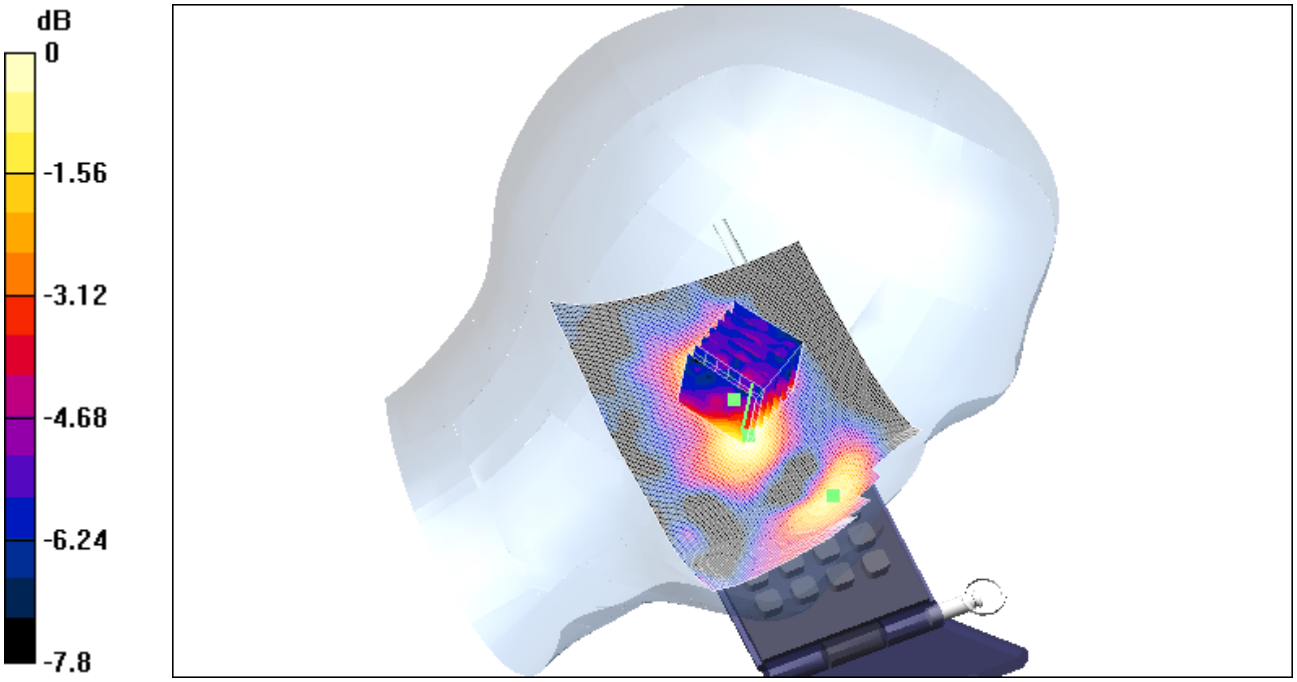

0 dB = 0.0335mW/g

Date/Time: 08/19/03 09:53:45

Test Laboratory: ELECTRONIC TECHNOLOGY SYSTEMS DR. GENZ GMBH
File Name: 1900_flat_ch512_front_d1,5.da4

1900_flat_ch512_front_d1,5

DUT: E-GSM900/GSN1800/GSM1900Triple BandGPRS Terminal Equipment; Type: -; Serial: I- 2000
Program: 1900 body

Communication System: GSM 1900; Frequency: 1850.2 MHz;Duty Cycle: 1:8
Medium: Muscle 1900 MHz (σ = 1.51 mho/m, ε_r = 51.23, ρ = 1000 kg/m^3)
Phantom section: Flat Section

DASY4 Configuration:

- Probe: ET3DV6 - SN1711; ConvF(5, 5, 5); Calibrated: 11/29/2002
- Sensor-Surface: 4mm (Mechanical And Optical Surface Detection)
- Electronics: DAE3 Sn522; Calibrated: 9/11/2002
- Phantom: SAM 12; Type: TP-1217; Serial: QD000P40CA
- Measurement SW: DASY4, V4.1 Build 47; Postprocessing SW: SEMCAD, V1.6 Build 115

Flat 1900 body/Area Scan (61x111x1): Measurement grid: dx=10mm, dy=10mm
Reference Value = 8.41 V/m
Power Drift = -0.02 dB
Maximum value of SAR = 0.104 mW/g

Flat 1900 body/Zoom Scan (7x7x7)/Cube 0: Measurement grid: dx=5mm, dy=5mm, dz=5mm
Peak SAR (extrapolated) = 0.148 W/kg
SAR(1 g) = 0.0969 mW/g; SAR(10 g) = 0.0612 mW/g
Reference Value = 8.41 V/m
Power Drift = -0.02 dB
Maximum value of SAR = 0.103 mW/g

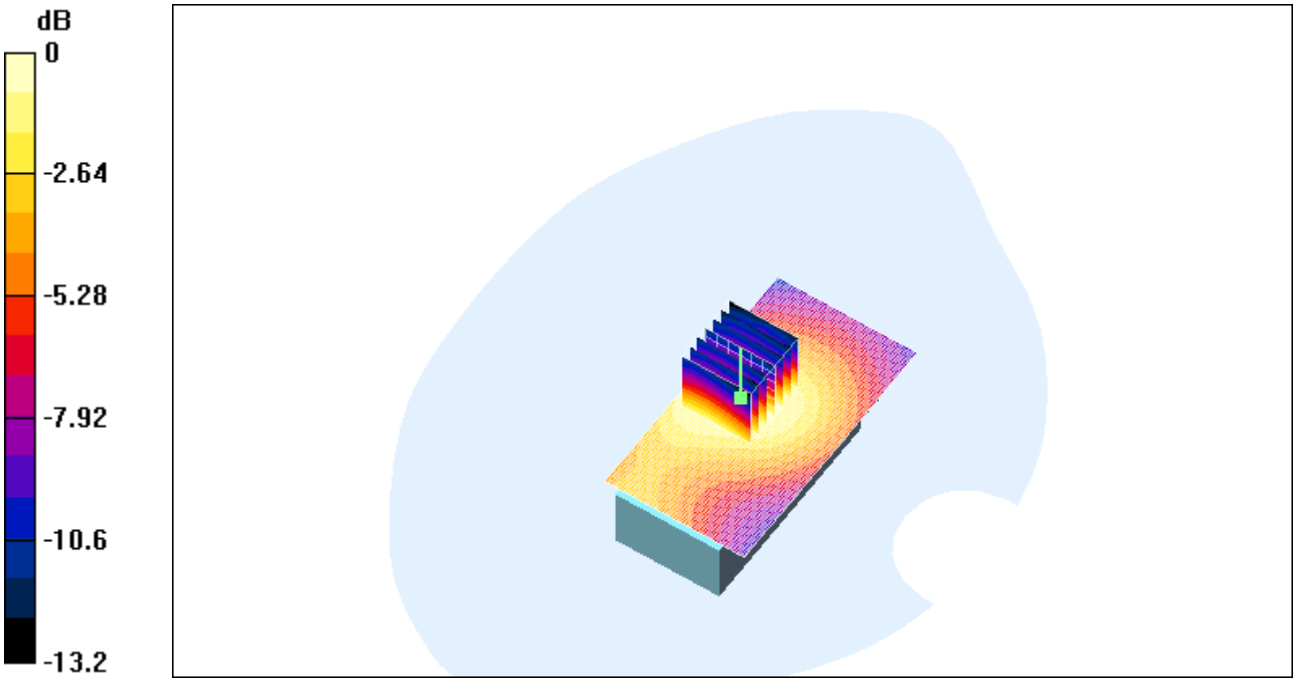

0 dB = 0.103mW/g

Date/Time: 08/19/03 09:20:10

Test Laboratory: ELECTRONIC TECHNOLOGY SYSTEMS DR. GENZ GMBH
File Name: 1900_flat_ch512_back_d1,5.da4

1900_flat_ch512_back_d1,5

DUT: E-GSM900/GSN1800/GSM1900Triple BandGPRS Terminal Equipment; Type: -; Serial: I- 2000
Program: 1900 body

Communication System: GSM 1900; Frequency: 1850.2 MHz;Duty Cycle: 1:8
Medium: Muscle 1900 MHz (σ = 1.58 mho/m, ε_r = 51.02, ρ = 1000 kg/m^3)
Phantom section: Flat Section

DASY4 Configuration:

- Probe: ET3DV6 - SN1711; ConvF(5, 5, 5); Calibrated: 11/29/2002
- Sensor-Surface: 4mm (Mechanical And Optical Surface Detection)
- Electronics: DAE3 Sn522; Calibrated: 9/11/2002
- Phantom: SAM 12; Type: TP-1217; Serial: QD000P40CA
- Measurement SW: DASY4, V4.1 Build 47; Postprocessing SW: SEMCAD, V1.6 Build 115

Flat 1900 body/Area Scan (61x111x1): Measurement grid: dx=10mm, dy=10mm
Reference Value = 15 V/m
Power Drift = 0.03 dB
Maximum value of SAR = 0.38 mW/g

Flat 1900 body/Zoom Scan (7x7x7)/Cube 0: Measurement grid: dx=5mm, dy=5mm, dz=5mm
Peak SAR (extrapolated) = 0.573 W/kg
SAR(1 g) = 0.351 mW/g; SAR(10 g) = 0.213 mW/g
Reference Value = 15 V/m
Power Drift = 0.03 dB
Maximum value of SAR = 0.37 mW/g

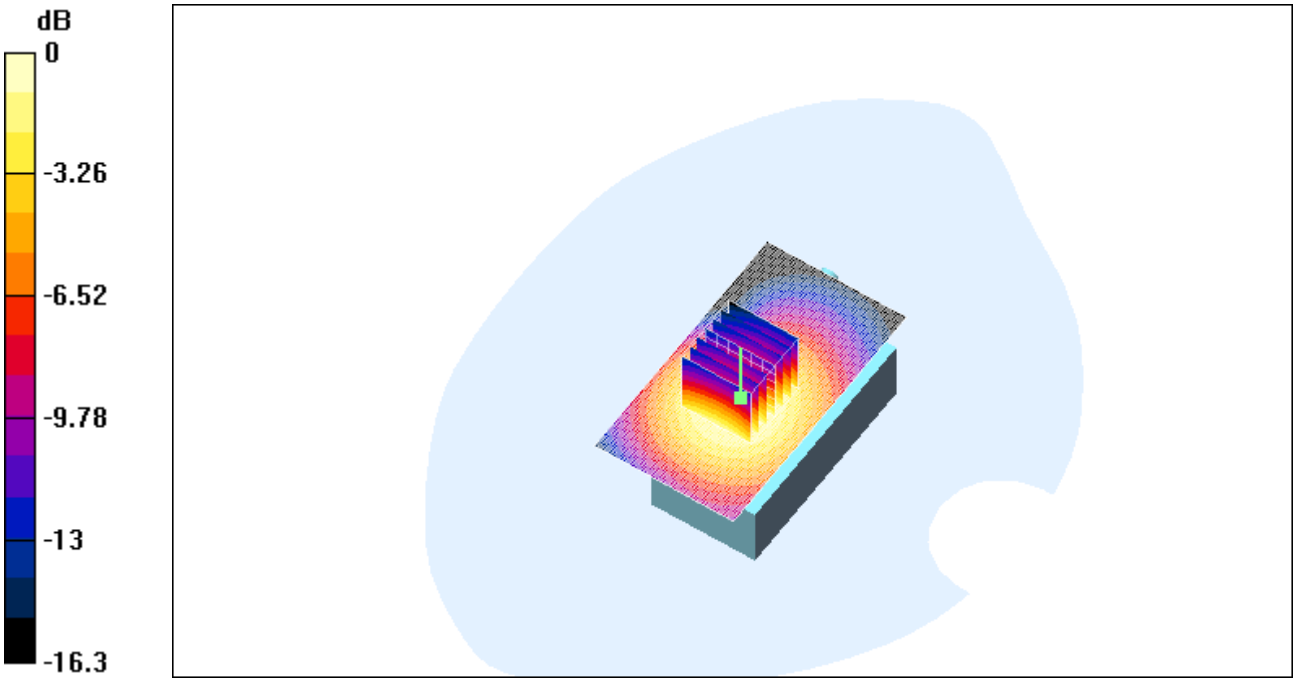

0 dB = 0.37mW/g

Date/Time: 08/19/03 10:26:41

Test Laboratory: ELECTRONIC TECHNOLOGY SYSTEMS DR. GENZ GMBH
File Name: 1900_flat_ch661_front_d1,5.da4

1900_flat_ch661_front_d1,5

DUT: E-GSM900/GSN1800/GSM1900Triple BandGPRS Terminal Equipment; Type: -; Serial: I- 2000
Program: 1900 body

Communication System: GSM 1900; Frequency: 1880 MHz;Duty Cycle: 1:8
Medium: Muscle 1900 MHz (σ = 1.55 mho/m, ε_r = 51.13, ρ = 1000 kg/m^3)
Phantom section: Flat Section

DASY4 Configuration:

- Probe: ET3DV6 - SN1711; ConvF(5, 5, 5); Calibrated: 11/29/2002
- Sensor-Surface: 4mm (Mechanical And Optical Surface Detection)
- Electronics: DAE3 Sn522; Calibrated: 9/11/2002
- Phantom: SAM 12; Type: TP-1217; Serial: QD000P40CA
- Measurement SW: DASY4, V4.1 Build 47; Postprocessing SW: SEMCAD, V1.6 Build 115

Flat 1900 body/Area Scan (61x111x1): Measurement grid: dx=10mm, dy=10mm
Reference Value = 8.66 V/m
Power Drift = -0.04 dB
Maximum value of SAR = 0.113 mW/g

Flat 1900 body/Zoom Scan (7x7x7)/Cube 0: Measurement grid: dx=5mm, dy=5mm, dz=5mm
Peak SAR (extrapolated) = 0.16 W/kg
SAR(1 g) = 0.104 mW/g; SAR(10 g) = 0.0652 mW/g
Reference Value = 8.66 V/m
Power Drift = -0.04 dB
Maximum value of SAR = 0.11 mW/g

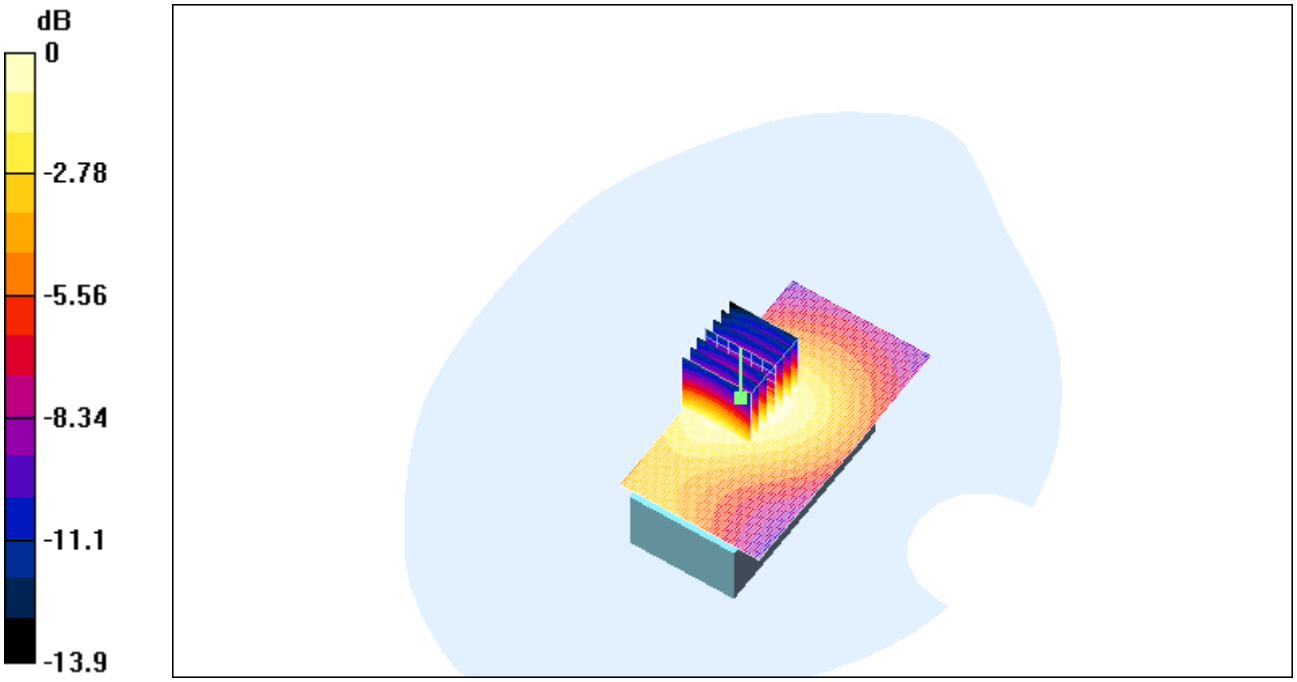

0 dB = 0.11mW/g

Date/Time: 08/19/03 08:46:21

Test Laboratory: ELECTRONIC TECHNOLOGY SYSTEMS DR. GENZ GMBH
File Name: 1900_flat_ch661_back_d1,5.da4

1900_flat_ch661_back_d1,5

DUT: E-GSM900/GSN1800/GSM1900Triple BandGPRS Terminal Equipment; Type: -; Serial: I- 2000
Program: 1900 body

Communication System: GSM 1900; Frequency: 1880 MHz;Duty Cycle: 1:8
Medium: Muscle 1900 MHz (σ = 1.58 mho/m, ε_r = 51.02, ρ = 1000 kg/m^3)
Phantom section: Flat Section

DASY4 Configuration:

- Probe: ET3DV6 - SN1711; ConvF(5, 5, 5); Calibrated: 11/29/2002
- Sensor-Surface: 4mm (Mechanical And Optical Surface Detection)
- Electronics: DAE3 Sn522; Calibrated: 9/11/2002
- Phantom: SAM 12; Type: TP-1217; Serial: QD000P40CA
- Measurement SW: DASY4, V4.1 Build 47; Postprocessing SW: SEMCAD, V1.6 Build 115

Flat 1900 body/Area Scan (61x111x1): Measurement grid: dx=10mm, dy=10mm
Reference Value = 14.6 V/m
Power Drift = 0.02 dB
Maximum value of SAR = 0.343 mW/g

Flat 1900 body/Zoom Scan (7x7x7)/Cube 0: Measurement grid: dx=5mm, dy=5mm, dz=5mm
Peak SAR (extrapolated) = 0.525 W/kg
SAR(1 g) = 0.321 mW/g; SAR(10 g) = 0.195 mW/g
Reference Value = 14.6 V/m
Power Drift = 0.02 dB
Maximum value of SAR = 0.341 mW/g

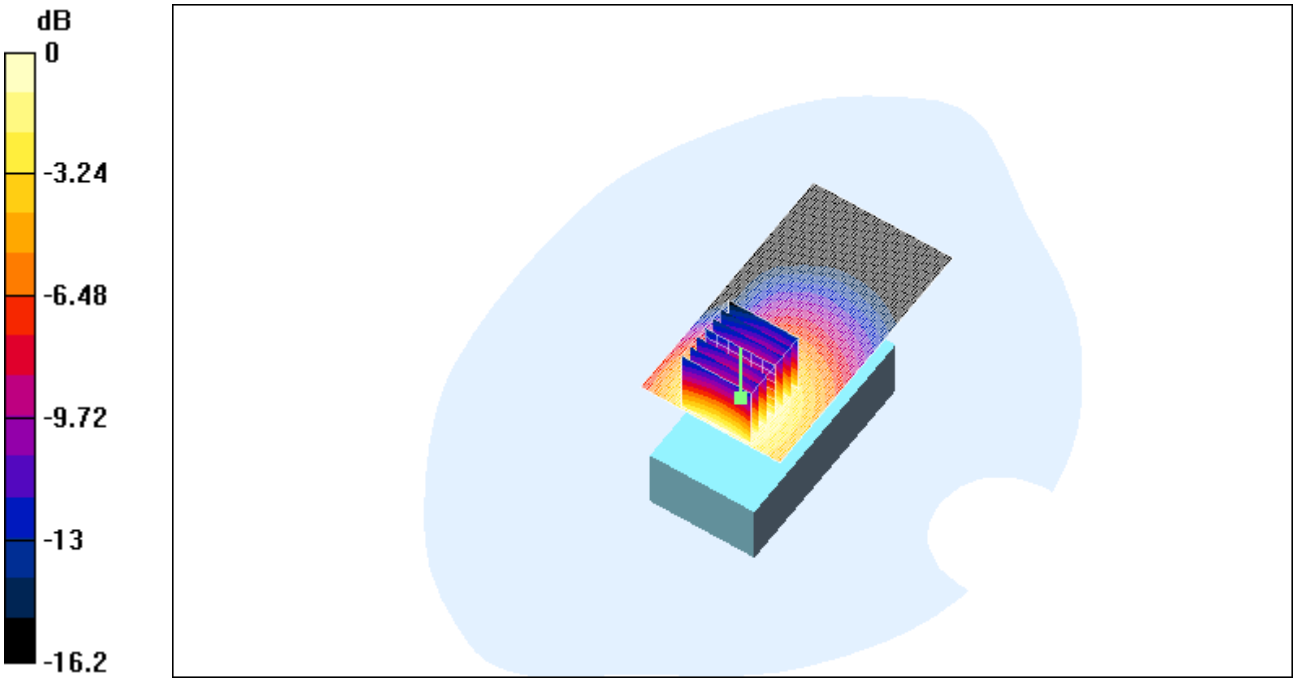

0 dB = 0.341mW/g

Date/Time: 08/19/03 10:54:35

Test Laboratory: ELECTRONIC TECHNOLOGY SYSTEMS DR. GENZ GMBH
File Name: 1900_flat_ch810_front_d1,5.da4

1900_flat_ch810_front_d1,5

DUT: E-GSM900/GSN1800/GSM1900Triple BandGPRS Terminal Equipment; Type: -; Serial: I- 2000
Program: 1900 body

Communication System: GSM 1900; Frequency: 1909.8 MHz;Duty Cycle: 1:8
Medium: Muscle 1900 MHz (σ = 1.58 mho/m, ε_r = 51.02, ρ = 1000 kg/m^3)
Phantom section: Flat Section

DASY4 Configuration:

- Probe: ET3DV6 - SN1711; ConvF(5, 5, 5); Calibrated: 11/29/2002
- Sensor-Surface: 4mm (Mechanical And Optical Surface Detection)
- Electronics: DAE3 Sn522; Calibrated: 9/11/2002
- Phantom: SAM 12; Type: TP-1217; Serial: QD000P40CA
- Measurement SW: DASY4, V4.1 Build 47; Postprocessing SW: SEMCAD, V1.6 Build 115

Flat 1900 body/Area Scan (61x111x1): Measurement grid: dx=10mm, dy=10mm
Reference Value = 8.9 V/m
Power Drift = -0.06 dB
Maximum value of SAR = 0.119 mW/g

Flat 1900 body/Zoom Scan (7x7x7)/Cube 0: Measurement grid: dx=5mm, dy=5mm, dz=5mm
Peak SAR (extrapolated) = 0.171 W/kg
SAR(1 g) = 0.111 mW/g; SAR(10 g) = 0.0698 mW/g
Reference Value = 8.9 V/m
Power Drift = -0.06 dB
Maximum value of SAR = 0.118 mW/g

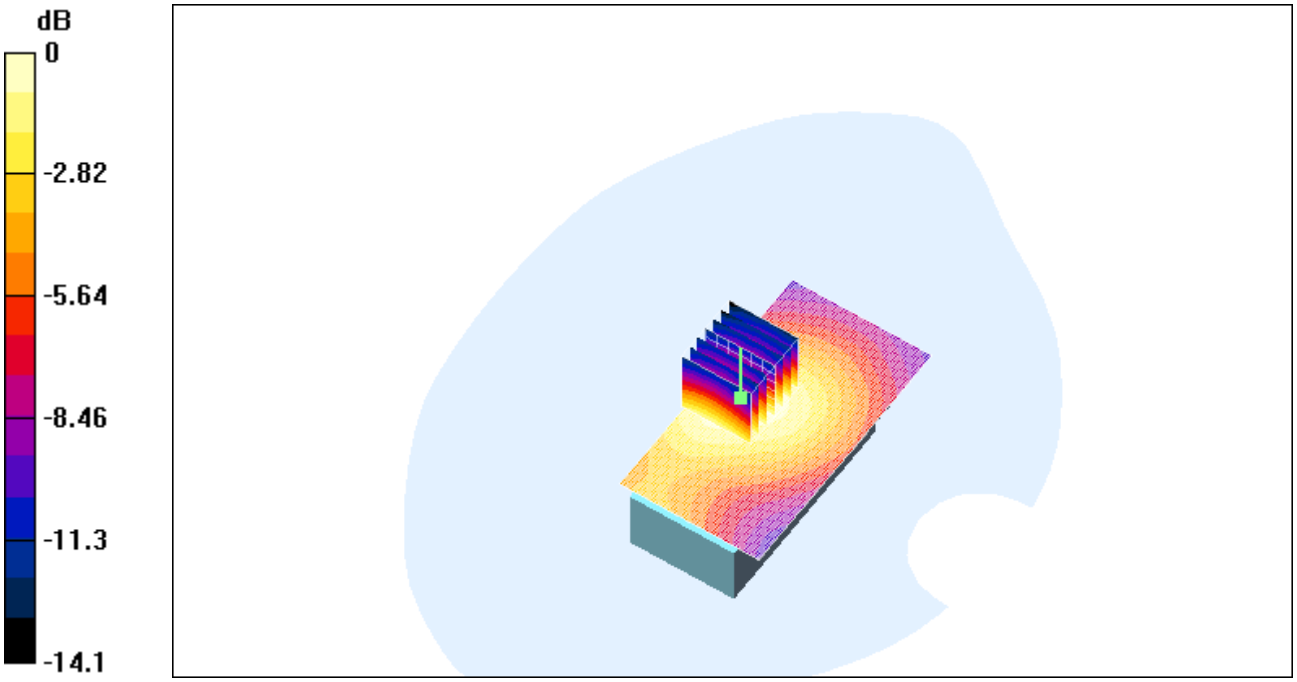

0 dB = 0.118mW/g

Date/Time: 08/19/03 08:17:08

Test Laboratory: ELECTRONIC TECHNOLOGY SYSTEMS DR. GENZ GMBH
File Name: 1900_flat_ch810_back_d1,5.da4

1900_flat_ch810_back_d1,5

DUT: E-GSM900/GSN1800/GSM1900Triple BandGPRS Terminal Equipment; Type: -; Serial: I- 2000
Program: 1900 body

Communication System: GSM 1900; Frequency: 1909.8 MHz;Duty Cycle: 1:8
Medium: Muscle 1900 MHz (σ = 1.58 mho/m, ε_r = 51.02, ρ = 1000 kg/m^3)
Phantom section: Flat Section

DASY4 Configuration:

- Probe: ET3DV6 - SN1711; ConvF(5, 5, 5); Calibrated: 11/29/2002
- Sensor-Surface: 4mm (Mechanical And Optical Surface Detection)
- Electronics: DAE3 Sn522; Calibrated: 9/11/2002
- Phantom: SAM 12; Type: TP-1217; Serial: QD000P40CA
- Measurement SW: DASY4, V4.1 Build 47; Postprocessing SW: SEMCAD, V1.6 Build 115

Flat 1900 body/Area Scan (61x111x1): Measurement grid: dx=10mm, dy=10mm
Reference Value = 13.2 V/m
Power Drift = -0.01 dB
Maximum value of SAR = 0.268 mW/g

Flat 1900 body/Zoom Scan (7x7x7)/Cube 0: Measurement grid: dx=5mm, dy=5mm, dz=5mm
Peak SAR (extrapolated) = 0.421 W/kg
SAR(1 g) = 0.253 mW/g; SAR(10 g) = 0.155 mW/g
Reference Value = 13.2 V/m
Power Drift = -0.01 dB
Maximum value of SAR = 0.269 mW/g

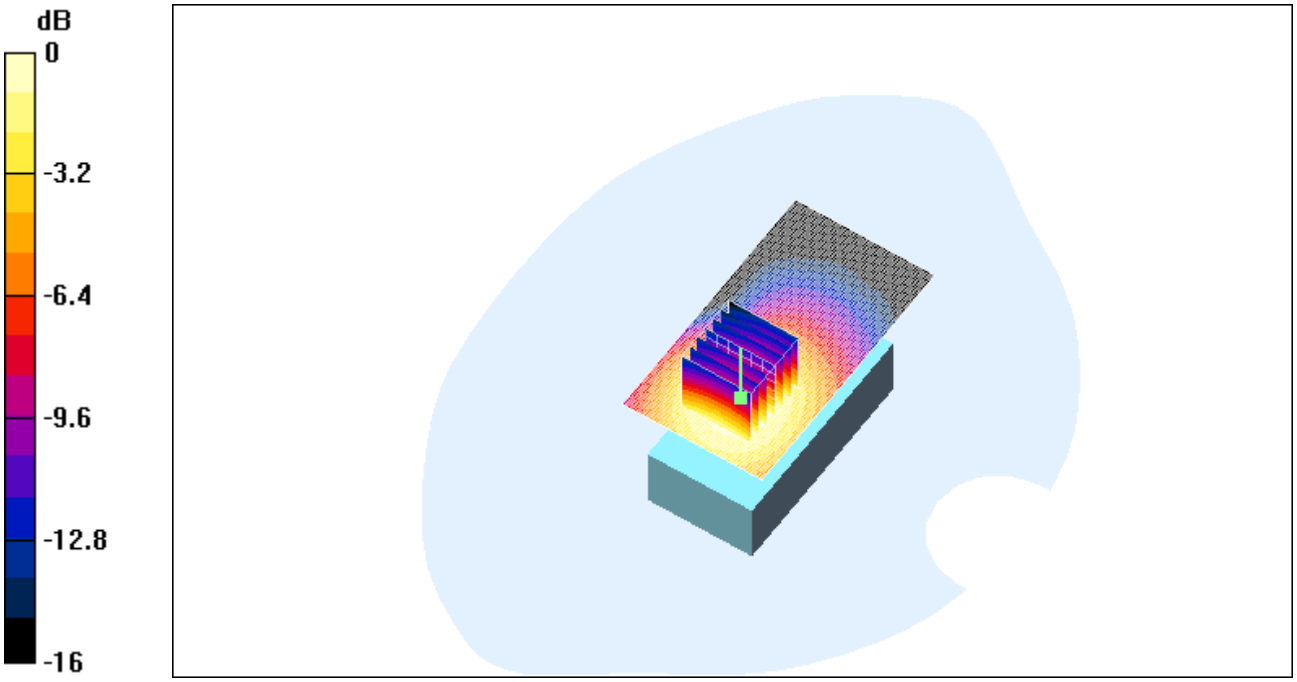

0 dB = 0.269mW/g

Date/Time: 08/13/03 18:17:08

Test Laboratory: ELECTRONIC TECHNOLOGY SYSTEMS DR. GENZ GMBH
File Name: 1900_right_ch512_cheek.da4

Z-axis scan

DUT: E-GSM900/GSM1800/GSM1900 Triple Band GPRS Terminal Equipment; Type: -; Serial: I-2000
Program: GSM 1900

Communication System: GSM 1900; Frequency: 1850.2 MHz;Duty Cycle: 1:8
Medium: Head 1900 MHz (σ = 1.3685 mho/m, ε_r = 39.9283, ρ = 1000 kg/m^3)
Phantom section: Right Section

DASY4 Configuration:

- Probe: ET3DV6 - SN1711; ConvF(5.3, 5.3, 5.3); Calibrated: 11/29/2002
- Sensor-Surface: 4mm (Mechanical And Optical Surface Detection)
- Electronics: DAE3 Sn522; Calibrated: 9/11/2002
- Phantom: SAM 12; Type: TP-1217; Serial: QD000P40CA
- Measurement SW: DASY4, V4.1 Build 47; Postprocessing SW: SEMCAD, V1.6 Build 115
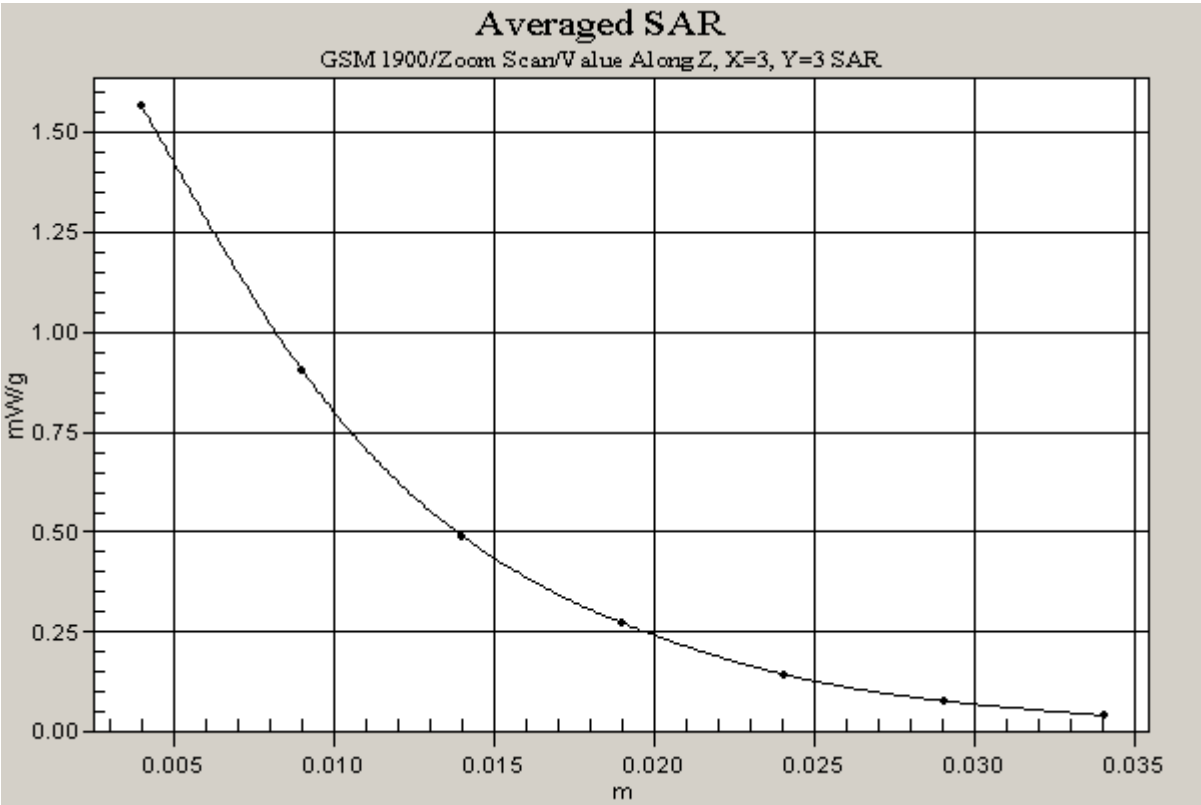
right_ch512/Zoom Scan (7x7x7)/Cube 0: Measurement grid: dx=5mm, dy=5mm, dz=5mm
Peak SAR (extrapolated) = 2.48 W/kg
SAR(1 g) = 1.39 mW/g; SAR(10 g) = 0.671 mW/g
Reference Value = 6.54 V/m
Power Drift = -1 dB
Maximum value of SAR = 1.56 mW/g