Appendix B

Measurement Plots

Date/Time: 08/13/03 13:55:52

Test Laboratory: ELECTRONIC TECHNOLOGY SYSTEMS DR. GENZ GMBH
File Name: Dipol Valid.1900(h)_13.08.03.da4

Dipol Valid.1900(h)_13.08.03

DUT: Dipole 1900 MHz; Type: D1900V2; Serial: 5d025
Program: Dipol Valid 1900

Communication System: CW; Frequency: 1900 MHz;Duty Cycle: 1:1
Medium: Head 1900 MHz (σ = 1.41529 mho/m, ε_r = 39.8679, ρ = 1000 kg/m^3)
Phantom section: Flat Section

DASY4 Configuration:

- Probe: ET3DV6 - SN1711; ConvF(5.3, 5.3, 5.3); Calibrated: 11/29/2002
- Sensor-Surface: 4mm (Mechanical And Optical Surface Detection)
- Electronics: DAE3 Sn522; Calibrated: 9/11/2002
- Phantom: SAM 12; Type: TP-1217; Serial: QD000P40CA
- Measurement SW: DASY4, V4.1 Build 47; Postprocessing SW: SEMCAD, V1.6 Build 115

Dipol 1900 (17dBm)/Area Scan (81x81x1): Measurement grid: dx=10mm, dy=10mm
Reference Value = 43.3 V/m
Power Drift = 0.05 dB
Maximum value of SAR = 2.54 mW/g

Dipol 1900 (17dBm)/Zoom Scan (7x7x7)/Cube 0: Measurement grid: dx=5mm, dy=5mm, dz=5mm
Peak SAR (extrapolated) = 4.28 W/kg
SAR(1 g) = 2.11 mW/g; SAR(10 g) = 1.05 mW/g
Reference Value = 43.3 V/m
Power Drift = 0.05 dB
Maximum value of SAR = 2.58 mW/g

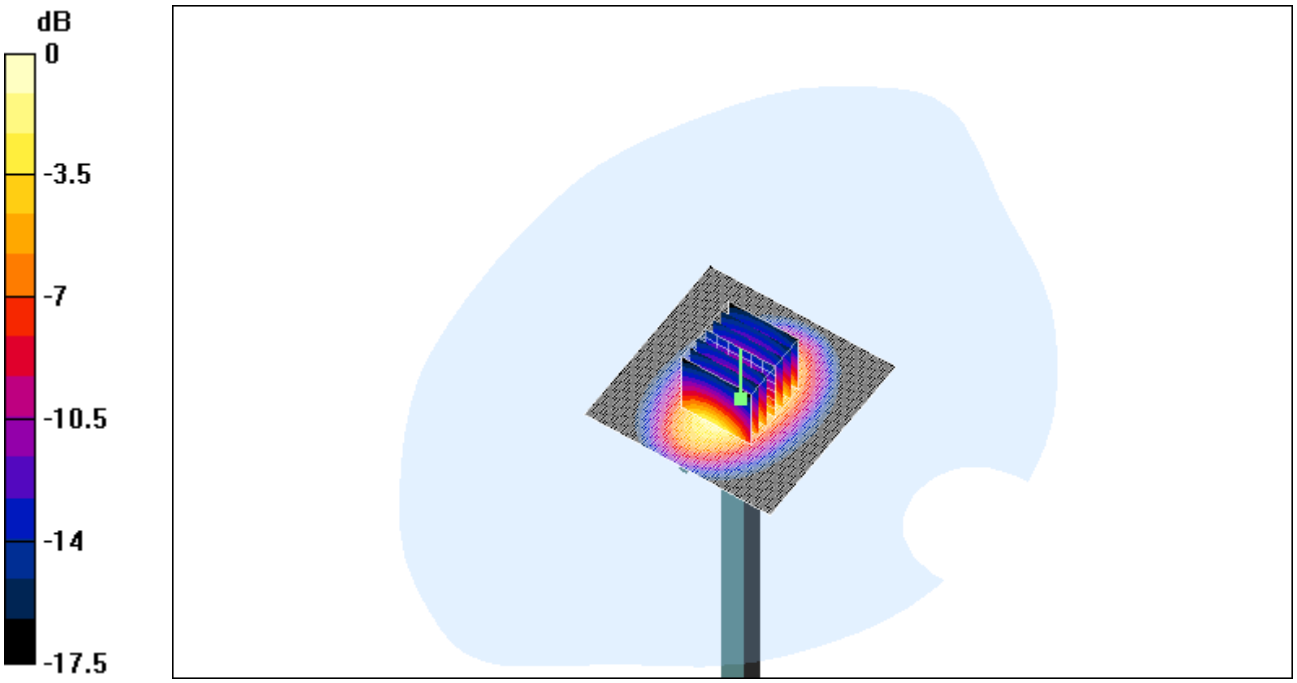

0 dB = 2.58mW/g

Date/Time: 08/14/03 13:22:32

Test Laboratory: ELECTRONIC TECHNOLOGY SYSTEMS DR. GENZ GMBH
File Name: Dipol Valid.1900(h)_14.08.03.da4

Dipol Valid.1900(h)_14.08.03

DUT: Dipole 1900 MHz; Type: D1900V2; Serial: 5d025
Program: Dipol Valid 1900

Communication System: CW; Frequency: 1900 MHz;Duty Cycle: 1:1
Medium: Head 1900 MHz (σ = 1.41529 mho/m, ε_r = 39.8679, ρ = 1000 kg/m^3)
Phantom section: Flat Section

DASY4 Configuration:

- Probe: ET3DV6 - SN1711; ConvF(5.3, 5.3, 5.3); Calibrated: 11/29/2002
- Sensor-Surface: 4mm (Mechanical And Optical Surface Detection)
- Electronics: DAE3 Sn522; Calibrated: 9/11/2002
- Phantom: SAM 12; Type: TP-1217; Serial: QD000P40CA
- Measurement SW: DASY4, V4.1 Build 47; Postprocessing SW: SEMCAD, V1.6 Build 115

Dipol 1900 (17dBm)/Area Scan (81x81x1): Measurement grid: dx=10mm, dy=10mm
Reference Value = 44.5 V/m
Power Drift = -0.003 dB
Maximum value of SAR = 2.54 mW/g

Dipol 1900 (17dBm)/Zoom Scan (7x7x7)/Cube 0: Measurement grid: dx=5mm, dy=5mm, dz=5mm
Peak SAR (extrapolated) = 4.06 W/kg
SAR(1 g) = 2.09 mW/g; SAR(10 g) = 1.08 mW/g
Reference Value = 44.5 V/m
Power Drift = -0.003 dB
Maximum value of SAR = 2.53 mW/g

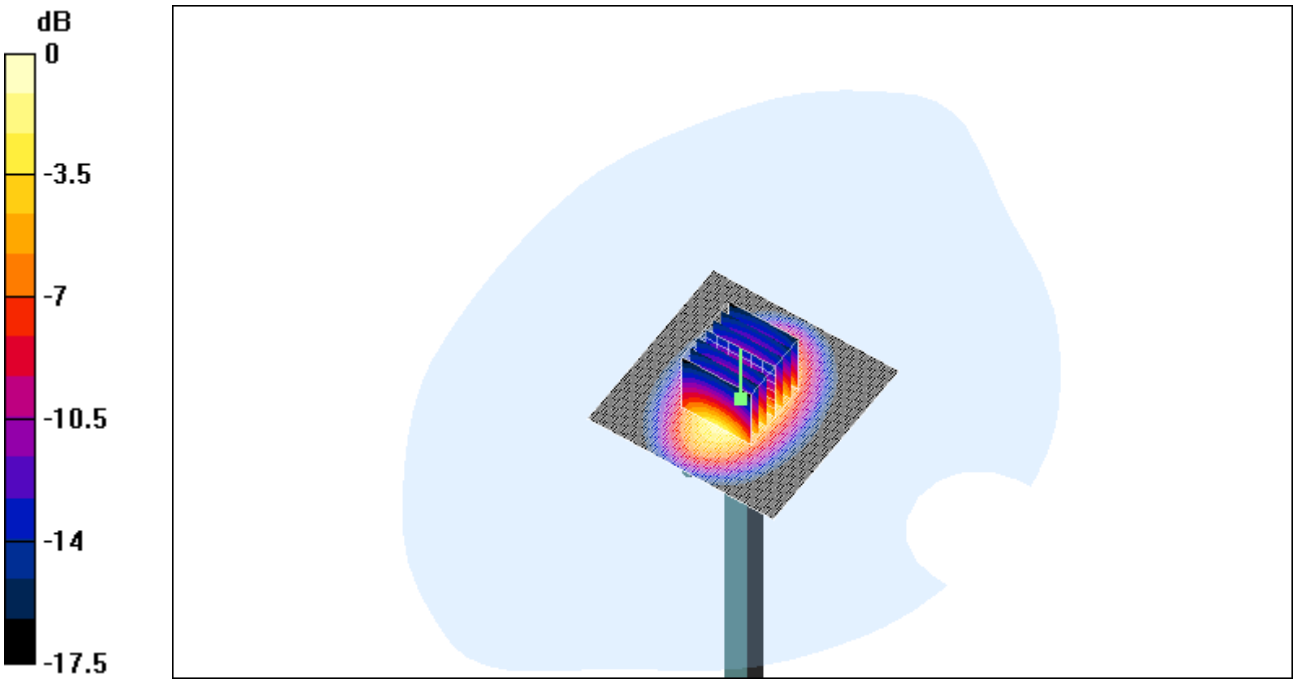

0 dB = 2.53mW/g

Date/Time: 08/18/03 10:26:23

Test Laboratory: ELECTRONIC TECHNOLOGY SYSTEMS DR. GENZ GMBH
File Name: Dipol Valid.1900 (m)_11.08.03.da4

Dipol Valid.1900 (m)_18.08.03

DUT: Dipole 1900 MHz; Type: D1900V2; Serial: 5d025
Program: Dipol Valid 1900

Communication System: CW; Frequency: 1900 MHz;Duty Cycle: 1:1
Medium: Muscle 1900 MHz (σ = 1.58 mho/m, ε_r = 51.02, ρ = 1000 kg/m^3)
Phantom section: Flat Section

DASY4 Configuration:

- Probe: ET3DV6 - SN1711; ConvF(5, 5, 5); Calibrated: 11/29/2002
- Sensor-Surface: 4mm (Mechanical And Optical Surface Detection)
- Electronics: DAE3 Sn522; Calibrated: 9/11/2002
- Phantom: SAM 12; Type: TP-1217; Serial: QD000P40CA
- Measurement SW: DASY4, V4.1 Build 47; Postprocessing SW: SEMCAD, V1.6 Build 115

Dipol 1900 (17dBm)/Area Scan (81x81x1): Measurement grid: dx=10mm, dy=10mm
Reference Value = 42.1 V/m
Power Drift = 0.02 dB
Maximum value of SAR = 2.56 mW/g

Dipol 1900 (17dBm)/Zoom Scan (7x7x7)/Cube 0: Measurement grid: dx=5mm, dy=5mm, dz=5mm
Peak SAR (extrapolated) = 4.16 W/kg
SAR(1 g) = 2.06 mW/g; SAR(10 g) = 1.06 mW/g
Reference Value = 42.1 V/m
Power Drift = 0.02 dB
Maximum value of SAR = 2.56 mW/g

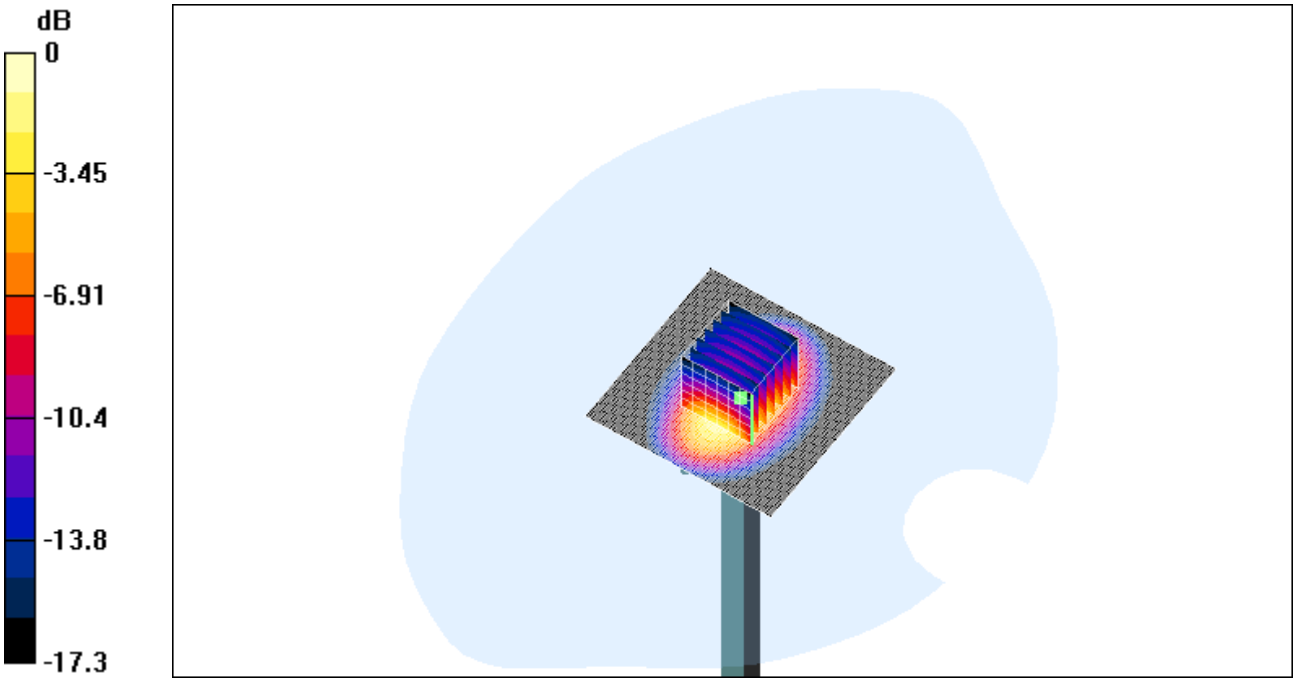

0 dB = 2.56mW/g

Date/Time: 08/13/03 18:54:35

Test Laboratory: ELECTRONIC TECHNOLOGY SYSTEMS DR. GENZ GMBH
File Name: 1900_right_ch512_cheek.da4

1900_right_ch512_cheek

DUT: E-GSM900/GSM1800/GSM1900 Triple Band GPRS Terminal Equipment; Type: -; Serial: I-2100
Program: GSM 1900

Communication System: GSM 1900; Frequency: 1850.2 MHz;Duty Cycle: 1:8
Medium: Head 1900 MHz (σ = 1.3685 mho/m, ε_r = 39.9283, ρ = 1000 kg/m^3)
Phantom section: Right Section

DASY4 Configuration:

- Probe: ET3DV6 - SN1711; ConvF(5.3, 5.3, 5.3); Calibrated: 11/29/2002
- Sensor-Surface: 4mm (Mechanical And Optical Surface Detection)
- Electronics: DAE3 Sn522; Calibrated: 9/11/2002
- Phantom: SAM 12; Type: TP-1217; Serial: QD000P40CA
- Measurement SW: DASY4, V4.1 Build 47; Postprocessing SW: SEMCAD, V1.6 Build 115

right_ch512/Area Scan (81x141x1): Measurement grid: dx=10mm, dy=10mm
Reference Value = 16.3 V/m
Power Drift = 0.01 dB
Maximum value of SAR = 1.17 mW/g

right_ch512/Zoom Scan (7x7x7)/Cube 0: Measurement grid: dx=5mm, dy=5mm, dz=5mm
Peak SAR (extrapolated) = 1.7 W/kg
SAR(1 g) = 1.08 mW/g; SAR(10 g) = 0.63 mW/g
Reference Value = 16.3 V/m
Power Drift = 0.01 dB
Maximum value of SAR = 1.17 mW/g

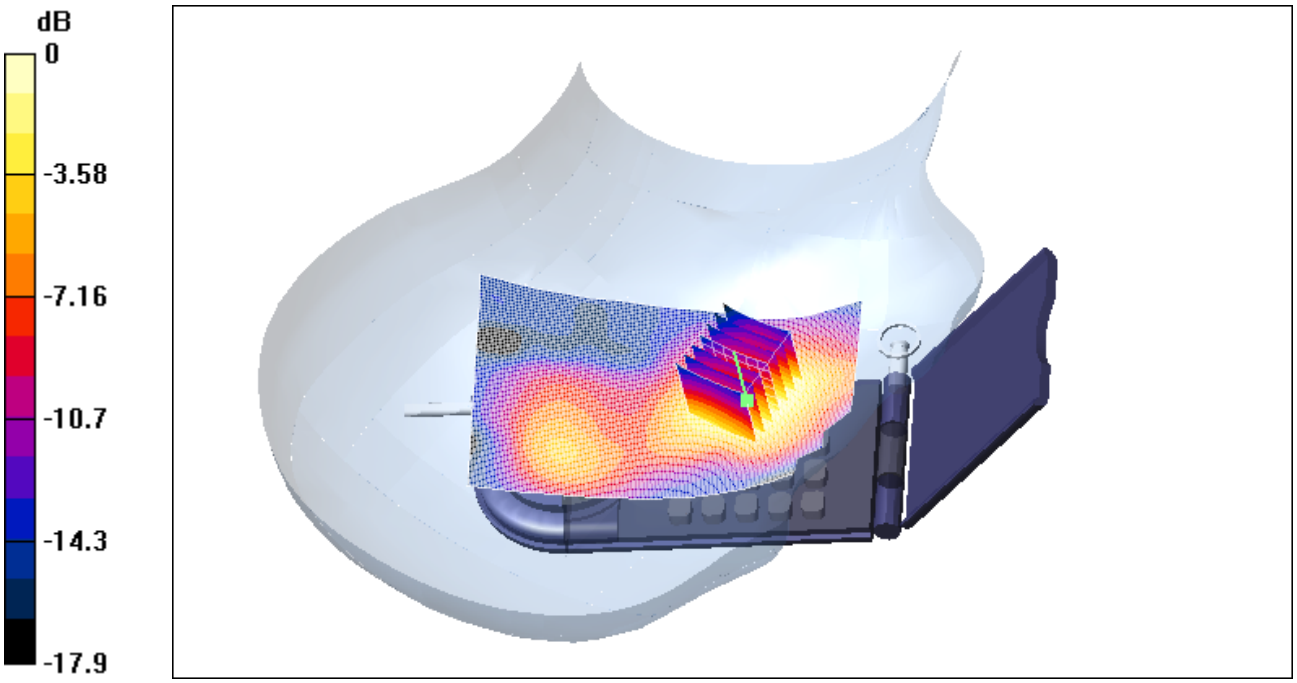

0 dB = 1.17mW/g

Date/Time: 08/14/03 07:01:45

Test Laboratory: ELECTRONIC TECHNOLOGY SYSTEMS DR. GENZ GMBH
File Name: 1900_right_ch512_tilted.da4

1900_right_ch512_tilted

DUT: E-GSM900/GSM1800/GSM1900 Triple Band GPRS Terminal Equipment; Type: -; Serial: I-2100
Program: GSM 1900

Communication System: GSM 1900; Frequency: 1850.2 MHz;Duty Cycle: 1:8
Medium: Head 1900 MHz (σ = 1.3685 mho/m, ε_r = 39.9283, ρ = 1000 kg/m^3)
Phantom section: Right Section

DASY4 Configuration:

- Probe: ET3DV6 - SN1711; ConvF(5.3, 5.3, 5.3); Calibrated: 11/29/2002
- Sensor-Surface: 4mm (Mechanical And Optical Surface Detection)
- Electronics: DAE3 Sn522; Calibrated: 9/11/2002
- Phantom: SAM 12; Type: TP-1217; Serial: QD000P40CA
- Measurement SW: DASY4, V4.1 Build 47; Postprocessing SW: SEMCAD, V1.6 Build 115

right_ch512/Area Scan (101x141x1): Measurement grid: dx=10mm, dy=10mm
Reference Value = 15.4 V/m
Power Drift = 0.04 dB
Maximum value of SAR = 0.313 mW/g

right_ch512/Zoom Scan (7x7x7)/Cube 0: Measurement grid: dx=5mm, dy=5mm, dz=5mm
Peak SAR (extrapolated) = 0.417 W/kg
SAR(1 g) = 0.287 mW/g; SAR(10 g) = 0.177 mW/g
Reference Value = 15.4 V/m
Power Drift = 0.04 dB
Maximum value of SAR = 0.312 mW/g

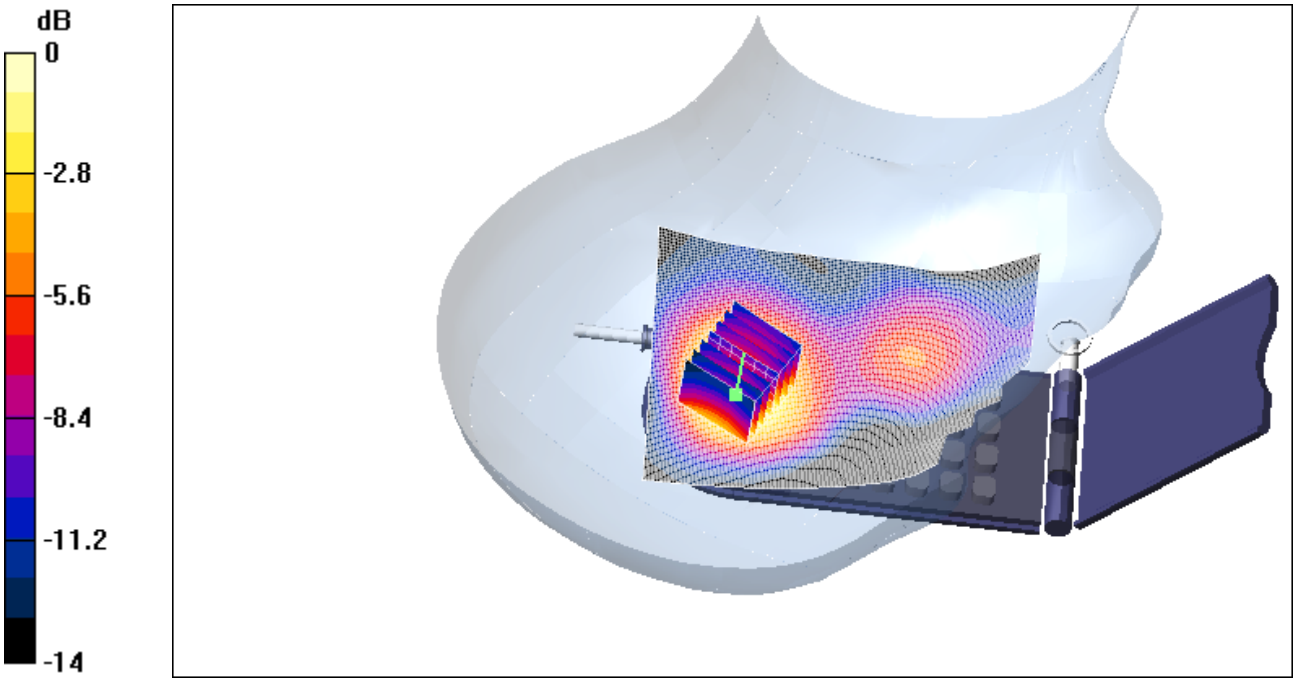

0 dB = 0.312mW/g

Date/Time: 08/13/03 19:32:29

Test Laboratory: ELECTRONIC TECHNOLOGY SYSTEMS DR. GENZ GMBH
File Name: 1900_right_ch661_cheek.da4

1900_right_ch661_cheek

DUT: E-GSM900/GSM1800/GSM1900 Triple Band GPRS Terminal Equipment; Type: -; Serial: I-2100
Program: GSM 1900

Communication System: GSM 1900; Frequency: 1880 MHz;Duty Cycle: 1:8
Medium: Head 1900 MHz (σ = 1.39732 mho/m, ε_r = 39.9416, ρ = 1000 kg/m^3)
Phantom section: Right Section

DASY4 Configuration:

- Probe: ET3DV6 - SN1711; ConvF(5.3, 5.3, 5.3); Calibrated: 11/29/2002
- Sensor-Surface: 4mm (Mechanical And Optical Surface Detection)
- Electronics: DAE3 Sn522; Calibrated: 9/11/2002
- Phantom: SAM 12; Type: TP-1217; Serial: QD000P40CA
- Measurement SW: DASY4, V4.1 Build 47; Postprocessing SW: SEMCAD, V1.6 Build 115

right_ch661/Area Scan (81x141x1): Measurement grid: dx=10mm, dy=10mm
Reference Value = 16 V/m
Power Drift = -0.03 dB
Maximum value of SAR = 1.16 mW/g

right_ch661/Zoom Scan (7x7x7)/Cube 0: Measurement grid: dx=5mm, dy=5mm, dz=5mm
Peak SAR (extrapolated) = 1.69 W/kg
SAR(1 g) = 1.06 mW/g; SAR(10 g) = 0.616 mW/g
Reference Value = 16 V/m
Power Drift = -0.03 dB
Maximum value of SAR = 1.16 mW/g

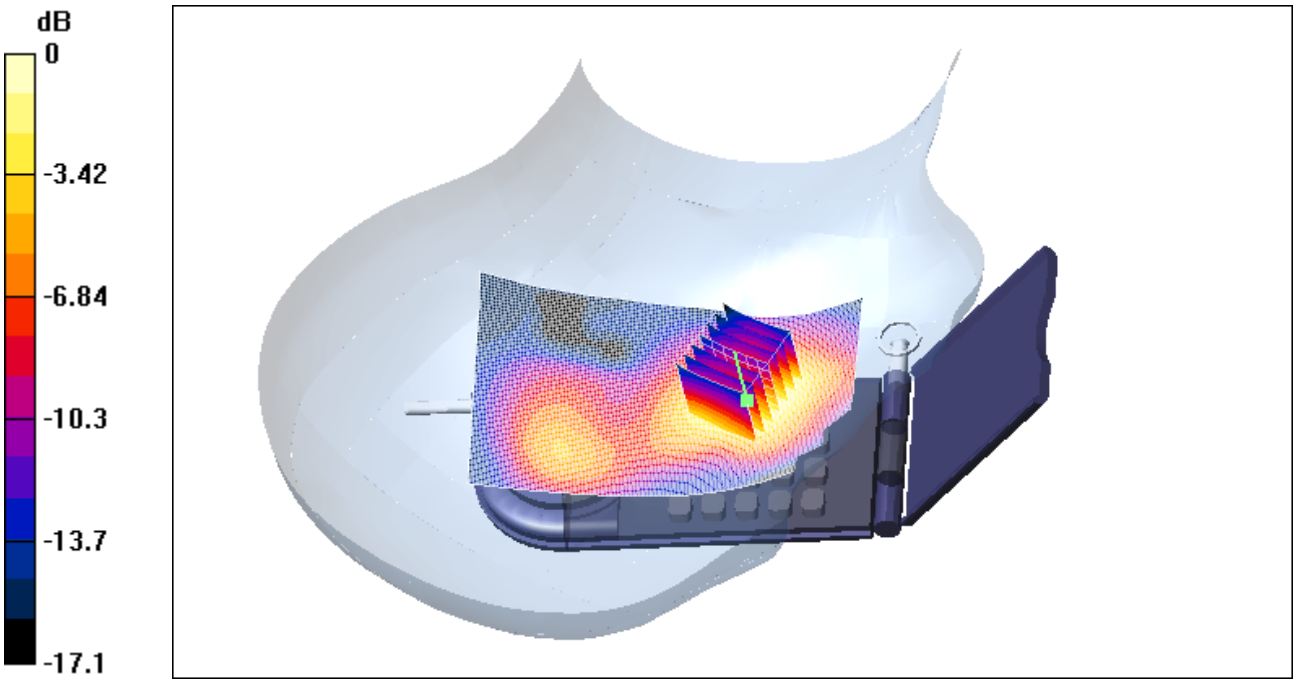

0 dB = 1.16mW/g

Date/Time: 08/13/03 21:43:55

Test Laboratory: ELECTRONIC TECHNOLOGY SYSTEMS DR. GENZ GMBH
File Name: 1900_right_ch661_tilted.da4

1900_right_ch661_tilted

DUT: E-GSM900/GSM1800/GSM1900 Triple Band GPRS Terminal Equipment; Type: -; Serial: I-2100
Program: GSM 1900

Communication System: GSM 1900; Frequency: 1880 MHz;Duty Cycle: 1:8
Medium: Head 1900 MHz (σ = 1.39732 mho/m, ε_r = 39.9416, ρ = 1000 kg/m^3)
Phantom section: Right Section

DASY4 Configuration:

- Probe: ET3DV6 - SN1711; ConvF(5.3, 5.3, 5.3); Calibrated: 11/29/2002
- Sensor-Surface: 4mm (Mechanical And Optical Surface Detection)
- Electronics: DAE3 Sn522; Calibrated: 9/11/2002
- Phantom: SAM 12; Type: TP-1217; Serial: QD000P40CA
- Measurement SW: DASY4, V4.1 Build 47; Postprocessing SW: SEMCAD, V1.6 Build 115

right_ch661/Area Scan (101x141x1): Measurement grid: dx=10mm, dy=10mm
Reference Value = 14.8 V/m
Power Drift = 0.05 dB
Maximum value of SAR = 0.303 mW/g

right_ch661/Zoom Scan (7x7x7)/Cube 0: Measurement grid: dx=5mm, dy=5mm, dz=5mm
Peak SAR (extrapolated) = 0.411 W/kg
SAR(1 g) = 0.276 mW/g; SAR(10 g) = 0.169 mW/g
Reference Value = 14.8 V/m
Power Drift = 0.05 dB
Maximum value of SAR = 0.301 mW/g

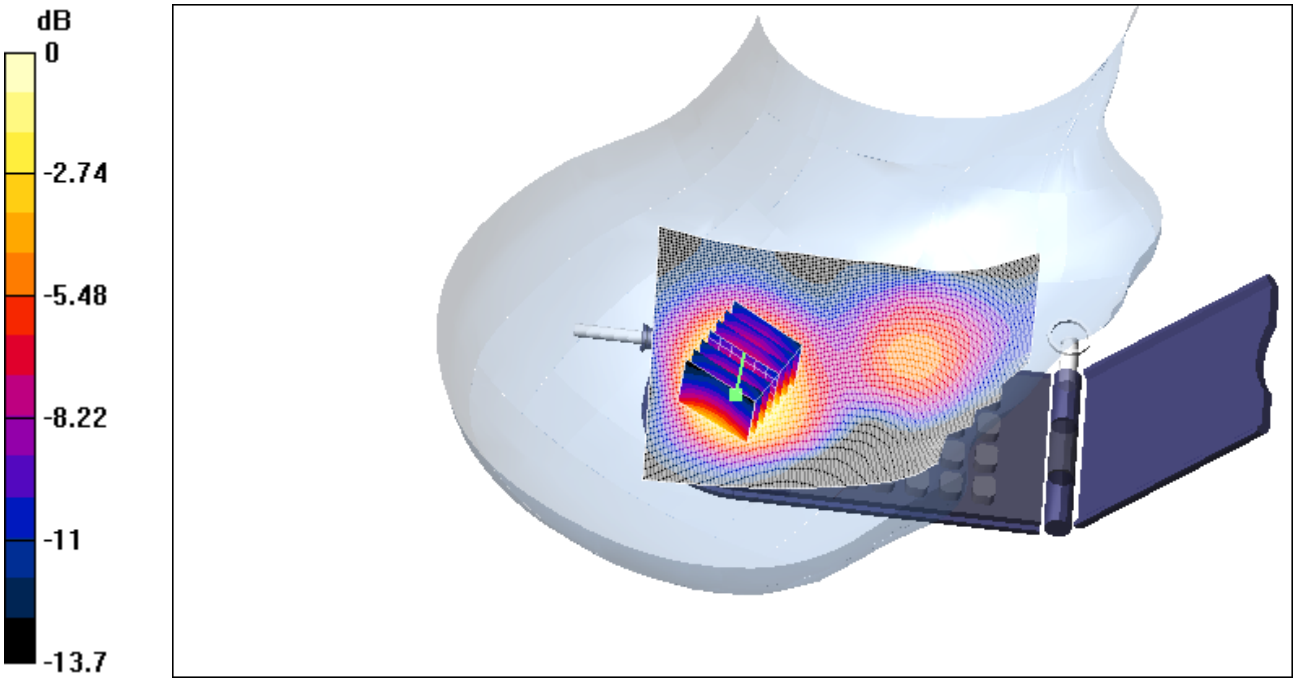

0 dB = 0.301mW/g

Date/Time: 08/13/03 20:08:21

Test Laboratory: ELECTRONIC TECHNOLOGY SYSTEMS DR. GENZ GMBH
File Name: 1900_right_ch810_cheek.da4

1900_right_ch810_cheek

DUT: E-GSM900/GSM1800/GSM1900 Triple Band GPRS Terminal Equipment; Type: -; Serial: I-2100
Program: GSM 1900

Communication System: GSM 1900; Frequency: 1909.8 MHz;Duty Cycle: 1:8
Medium: Head 1900 MHz (σ = 1.4255 mho/m, ε_r = 39.78, ρ = 1000 kg/m^3)
Phantom section: Right Section

DASY4 Configuration:

- Probe: ET3DV6 - SN1711; ConvF(5.3, 5.3, 5.3); Calibrated: 11/29/2002
- Sensor-Surface: 4mm (Mechanical And Optical Surface Detection)
- Electronics: DAE3 Sn522; Calibrated: 9/11/2002
- Phantom: SAM 12; Type: TP-1217; Serial: QD000P40CA
- Measurement SW: DASY4, V4.1 Build 47; Postprocessing SW: SEMCAD, V1.6 Build 115

right_ch810/Area Scan (81x141x1): Measurement grid: dx=10mm, dy=10mm
Reference Value = 14.5 V/m
Power Drift = 0.03 dB
Maximum value of SAR = 0.97 mW/g

right_ch810/Zoom Scan (7x7x7)/Cube 0: Measurement grid: dx=5mm, dy=5mm, dz=5mm
Peak SAR (extrapolated) = 1.59 W/kg
SAR(1 g) = 0.917 mW/g; SAR(10 g) = 0.547 mW/g
Reference Value = 14.5 V/m
Power Drift = 0.03 dB
Maximum value of SAR = 0.991 mW/g

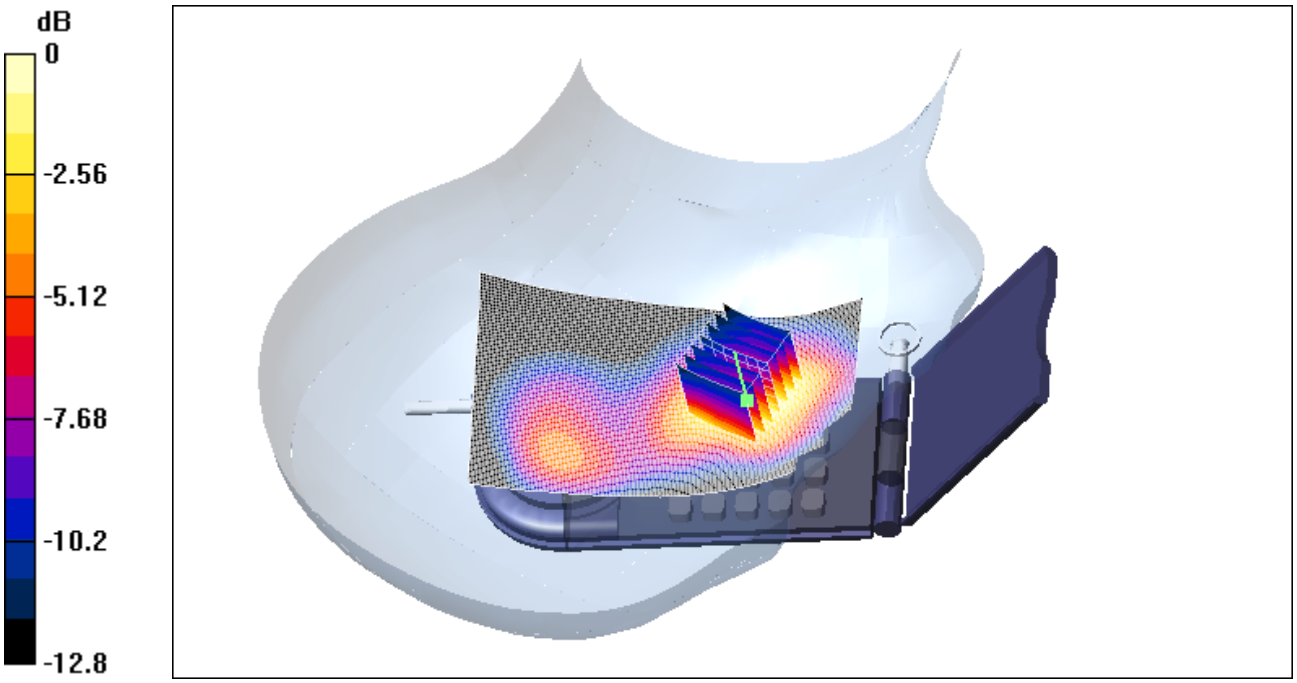

0 dB = 0.991mW/g

Date/Time: 08/13/03 21:02:20

Test Laboratory: ELECTRONIC TECHNOLOGY SYSTEMS DR. GENZ GMBH
File Name: 1900_right_ch810_tilted.da4

1900_right_ch810_tilted

DUT: E-GSM900/GSM1800/GSM1900 Triple Band GPRS Terminal Equipment; Type: -; Serial: I-2100
Program: GSM 1900

Communication System: GSM 1900; Frequency: 1909.8 MHz;Duty Cycle: 1:8
Medium: Head 1900 MHz (σ = 1.4255 mho/m, ε_r = 39.78, ρ = 1000 kg/m^3)
Phantom section: Right Section

DASY4 Configuration:

- Probe: ET3DV6 - SN1711; ConvF(5.3, 5.3, 5.3); Calibrated: 11/29/2002
- Sensor-Surface: 4mm (Mechanical And Optical Surface Detection)
- Electronics: DAE3 Sn522; Calibrated: 9/11/2002
- Phantom: SAM 12; Type: TP-1217; Serial: QD000P40CA
- Measurement SW: DASY4, V4.1 Build 47; Postprocessing SW: SEMCAD, V1.6 Build 115

right_ch810/Area Scan (101x141x1): Measurement grid: dx=10mm, dy=10mm
Reference Value = 13.7 V/m
Power Drift = 0.006 dB
Maximum value of SAR = 0.263 mW/g

right_ch810/Zoom Scan (7x7x7)/Cube 0: Measurement grid: dx=5mm, dy=5mm, dz=5mm
Peak SAR (extrapolated) = 0.358 W/kg
SAR(1 g) = 0.239 mW/g; SAR(10 g) = 0.147 mW/g
Reference Value = 13.7 V/m
Power Drift = 0.006 dB
Maximum value of SAR = 0.254 mW/g

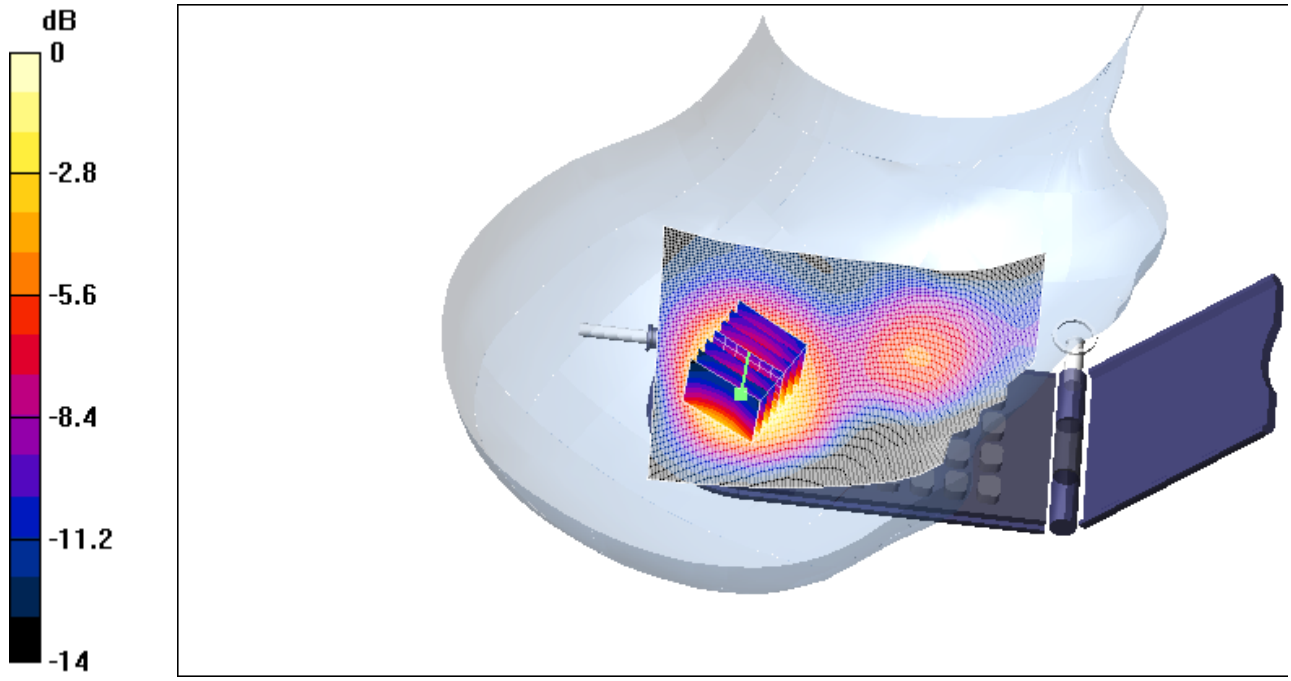

0 dB = 0.254mW/g

Date/Time: 08/14/03 11:52:25

Test Laboratory: ELECTRONIC TECHNOLOGY SYSTEMS DR. GENZ GMBH
File Name: 1900_left_ch512_cheek.da4

1900_left_ch512_cheek

DUT: E-GSM900/GSM1800/GSM1900 Triple Band GPRS Terminal Equipment; Type: -; Serial: I-2100
Program: GSM 1900

Communication System: GSM 1900; Frequency: 1850.2 MHz;Duty Cycle: 1:8
Medium: Head 1900 MHz (σ = 1.3685 mho/m, ε_r = 39.9283, ρ = 1000 kg/m^3)
Phantom section: Left Section

DASY4 Configuration:

- Probe: ET3DV6 - SN1711; ConvF(5.3, 5.3, 5.3); Calibrated: 11/29/2002
- Sensor-Surface: 4mm (Mechanical And Optical Surface Detection)
- Electronics: DAE3 Sn522; Calibrated: 9/11/2002
- Phantom: SAM 12; Type: TP-1217; Serial: QD000P40CA
- Measurement SW: DASY4, V4.1 Build 47; Postprocessing SW: SEMCAD, V1.6 Build 115

left_ch512/Area Scan (101x141x1): Measurement grid: dx=10mm, dy=10mm
Reference Value = 16.6 V/m
Power Drift = -0.04 dB
Maximum value of SAR = 1.07 mW/g

left_ch512/Zoom Scan (7x7x7)/Cube 0: Measurement grid: dx=5mm, dy=5mm, dz=5mm
Peak SAR (extrapolated) = 1.6 W/kg
SAR(1 g) = 0.975 mW/g; SAR(10 g) = 0.57 mW/g
Reference Value = 16.6 V/m
Power Drift = -0.04 dB
Maximum value of SAR = 1.06 mW/g

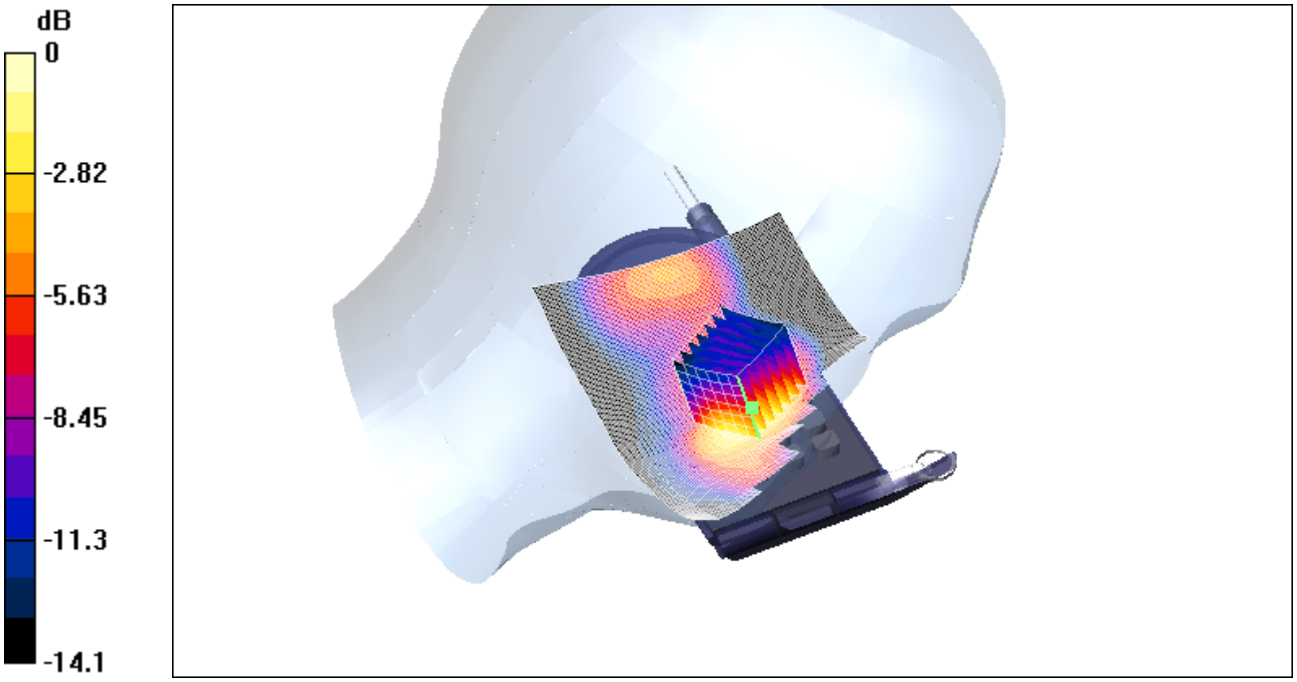

0 dB = 1.06mW/g

Date/Time: 08/14/03 08:21:52

Test Laboratory: ELECTRONIC TECHNOLOGY SYSTEMS DR. GENZ GMBH
File Name: 1900_left_ch512_tilted.da4

1900_left_ch512_tilted

DUT: E-GSM900/GSM1800/GSM1900 Triple Band GPRS Terminal Equipment; Type: -; Serial: I-2100
Program: GSM 1900

Communication System: GSM 1900; Frequency: 1850.2 MHz;Duty Cycle: 1:8
Medium: Head 1900 MHz (σ = 1.3685 mho/m, ε_r = 39.9283, ρ = 1000 kg/m^3)
Phantom section: Left Section

DASY4 Configuration:

- Probe: ET3DV6 - SN1711; ConvF(5.3, 5.3, 5.3); Calibrated: 11/29/2002
- Sensor-Surface: 4mm (Mechanical And Optical Surface Detection)
- Electronics: DAE3 Sn522; Calibrated: 9/11/2002
- Phantom: SAM 12; Type: TP-1217; Serial: QD000P40CA
- Measurement SW: DASY4, V4.1 Build 47; Postprocessing SW: SEMCAD, V1.6 Build 115

left_ch512/Area Scan (101x141x1): Measurement grid: dx=10mm, dy=10mm
Reference Value = 14.9 V/m
Power Drift = -0.02 dB
Maximum value of SAR = 0.295 mW/g

left_ch512/Zoom Scan (7x7x7)/Cube 0: Measurement grid: dx=5mm, dy=5mm, dz=5mm
Peak SAR (extrapolated) = 0.388 W/kg
SAR(1 g) = 0.268 mW/g; SAR(10 g) = 0.167 mW/g
Reference Value = 14.9 V/m
Power Drift = -0.02 dB
Maximum value of SAR = 0.29 mW/g

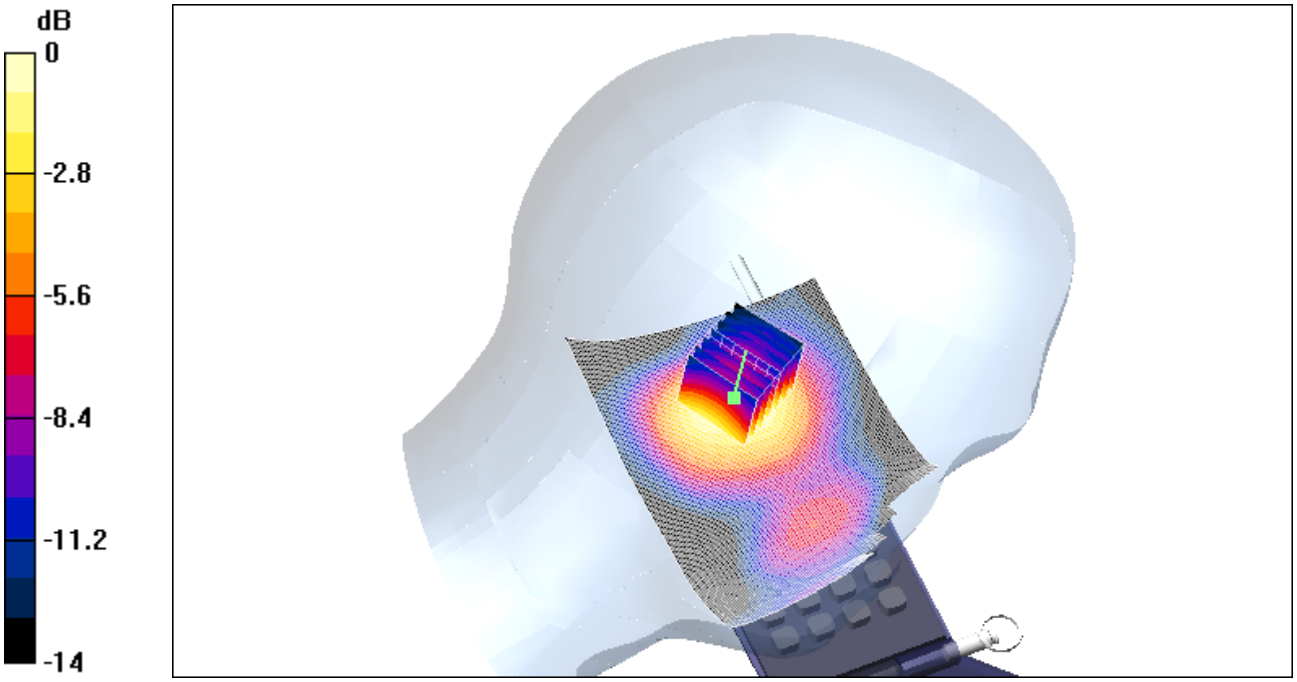

0 dB = 0.29mW/g

Date/Time: 08/14/03 11:14:15

Test Laboratory: ELECTRONIC TECHNOLOGY SYSTEMS DR. GENZ GMBH
File Name: 1900_left_ch661_cheek.da4

1900_left_ch661_cheek

DUT: E-GSM900/GSM1800/GSM1900 Triple Band GPRS Terminal Equipment; Type: -; Serial: I-2100
Program: GSM 1900

Communication System: GSM 1900; Frequency: 1880 MHz;Duty Cycle: 1:8
Medium: Head 1900 MHz (σ = 1.39732 mho/m, ε_r = 39.9416, ρ = 1000 kg/m^3)
Phantom section: Left Section

DASY4 Configuration:

- Probe: ET3DV6 - SN1711; ConvF(5.3, 5.3, 5.3); Calibrated: 11/29/2002
- Sensor-Surface: 4mm (Mechanical And Optical Surface Detection)
- Electronics: DAE3 Sn522; Calibrated: 9/11/2002
- Phantom: SAM 12; Type: TP-1217; Serial: QD000P40CA
- Measurement SW: DASY4, V4.1 Build 47; Postprocessing SW: SEMCAD, V1.6 Build 115

left_ch661/Area Scan (101x141x1): Measurement grid: dx=10mm, dy=10mm
Reference Value = 16.2 V/m
Power Drift = -0.03 dB
Maximum value of SAR = 1.05 mW/g

left_ch661/Zoom Scan (7x7x7)/Cube 0: Measurement grid: dx=5mm, dy=5mm, dz=5mm
Peak SAR (extrapolated) = 1.55 W/kg
SAR(1 g) = 0.944 mW/g; SAR(10 g) = 0.56 mW/g
Reference Value = 16.2 V/m
Power Drift = -0.03 dB
Maximum value of SAR = 1.04 mW/g

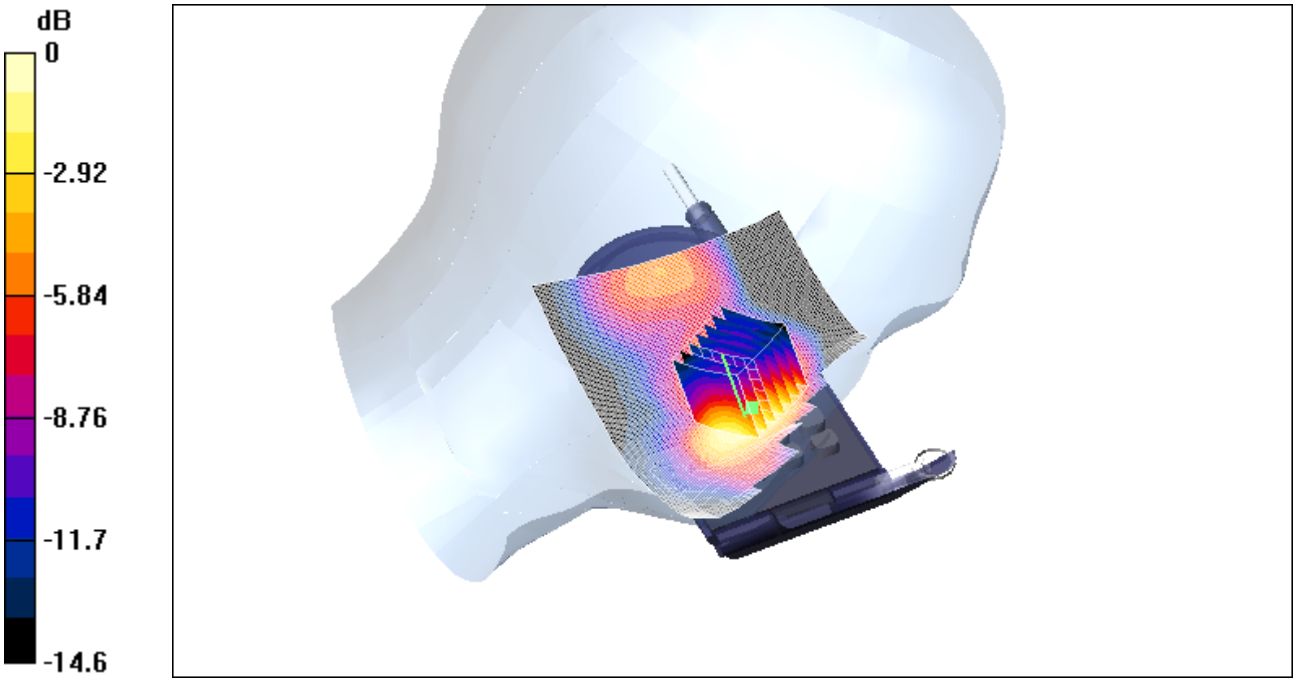

0 dB = 1.04mW/g

Date/Time: 08/14/03 08:58:27

Test Laboratory: ELECTRONIC TECHNOLOGY SYSTEMS DR. GENZ GMBH
File Name: 1900_left_ch661_tilted.da4

1900_left_ch661_tilted

DUT: E-GSM900/GSM1800/GSM1900 Triple Band GPRS Terminal Equipment; Type: -; Serial: I-2100
Program: GSM 1900

Communication System: GSM 1900; Frequency: 1880 MHz;Duty Cycle: 1:8
Medium: Head 1900 MHz (σ = 1.39732 mho/m, ε_r = 39.9416, ρ = 1000 kg/m^3)
Phantom section: Left Section

DASY4 Configuration:

- Probe: ET3DV6 - SN1711; ConvF(5.3, 5.3, 5.3); Calibrated: 11/29/2002
- Sensor-Surface: 4mm (Mechanical And Optical Surface Detection)
- Electronics: DAE3 Sn522; Calibrated: 9/11/2002
- Phantom: SAM 12; Type: TP-1217; Serial: QD000P40CA
- Measurement SW: DASY4, V4.1 Build 47; Postprocessing SW: SEMCAD, V1.6 Build 115

left_ch661/Area Scan (101x141x1): Measurement grid: dx=10mm, dy=10mm
Reference Value = 14.5 V/m
Power Drift = -0.006 dB
Maximum value of SAR = 0.282 mW/g

left_ch661/Zoom Scan (7x7x7)/Cube 0: Measurement grid: dx=5mm, dy=5mm, dz=5mm
Peak SAR (extrapolated) = 0.39 W/kg
SAR(1 g) = 0.259 mW/g; SAR(10 g) = 0.158 mW/g
Reference Value = 14.5 V/m
Power Drift = -0.006 dB
Maximum value of SAR = 0.28 mW/g

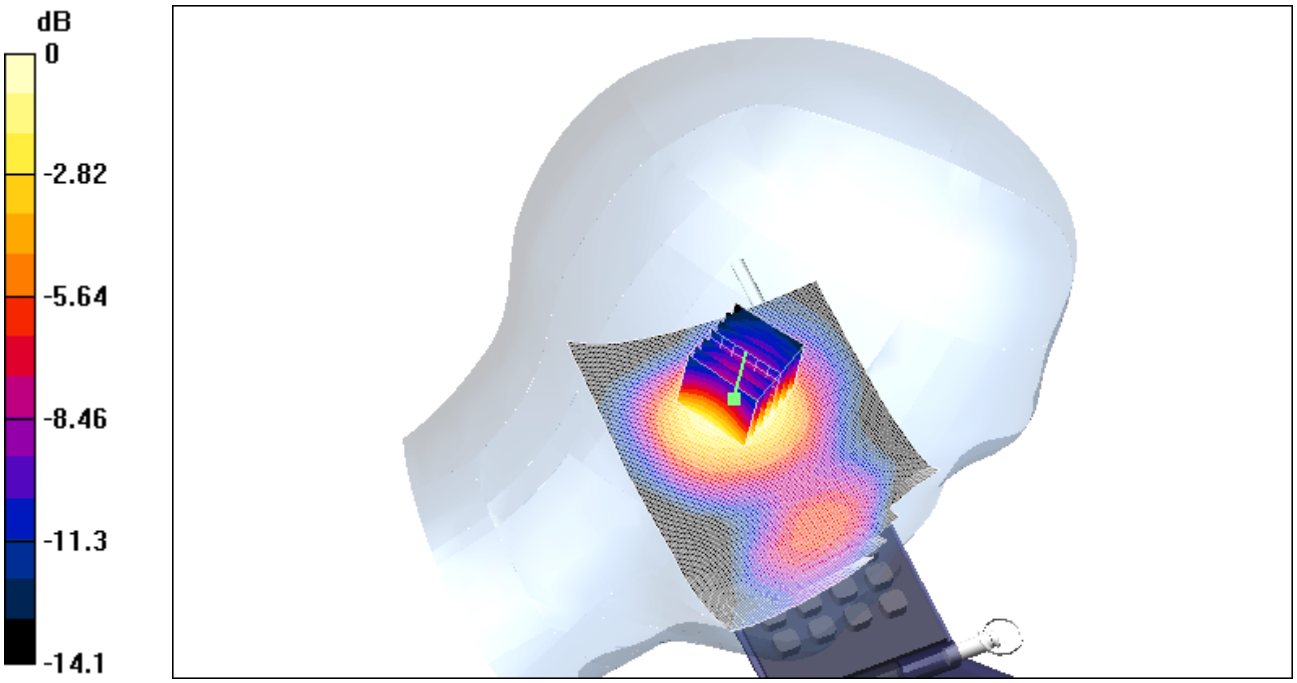

0 dB = 0.28mW/g

Date/Time: 08/14/03 10:31:07

Test Laboratory: ELECTRONIC TECHNOLOGY SYSTEMS DR. GENZ GMBH
File Name: 1900_left_ch810_cheek.da4

1900_left_ch810_cheek

DUT: E-GSM900/GSM1800/GSM1900 Triple Band GPRS Terminal Equipment; Type: -; Serial: I-2100
Program: GSM 1900

Communication System: GSM 1900; Frequency: 1909.8 MHz;Duty Cycle: 1:8
Medium: Head 1900 MHz (σ = 1.4255 mho/m, ε_r = 39.78, ρ = 1000 kg/m^3)
Phantom section: Left Section

DASY4 Configuration:

- Probe: ET3DV6 - SN1711; ConvF(5.3, 5.3, 5.3); Calibrated: 11/29/2002
- Sensor-Surface: 4mm (Mechanical And Optical Surface Detection)
- Electronics: DAE3 Sn522; Calibrated: 9/11/2002
- Phantom: SAM 12; Type: TP-1217; Serial: QD000P40CA
- Measurement SW: DASY4, V4.1 Build 47; Postprocessing SW: SEMCAD, V1.6 Build 115

left_ch810/Area Scan (101x141x1): Measurement grid: dx=10mm, dy=10mm
Reference Value = 15 V/m
Power Drift = 0.01 dB
Maximum value of SAR = 0.902 mW/g

left_ch810/Zoom Scan (7x7x7)/Cube 0: Measurement grid: dx=5mm, dy=5mm, dz=5mm
Peak SAR (extrapolated) = 1.33 W/kg
SAR(1 g) = 0.806 mW/g; SAR(10 g) = 0.476 mW/g
Reference Value = 15 V/m
Power Drift = 0.01 dB
Maximum value of SAR = 0.875 mW/g

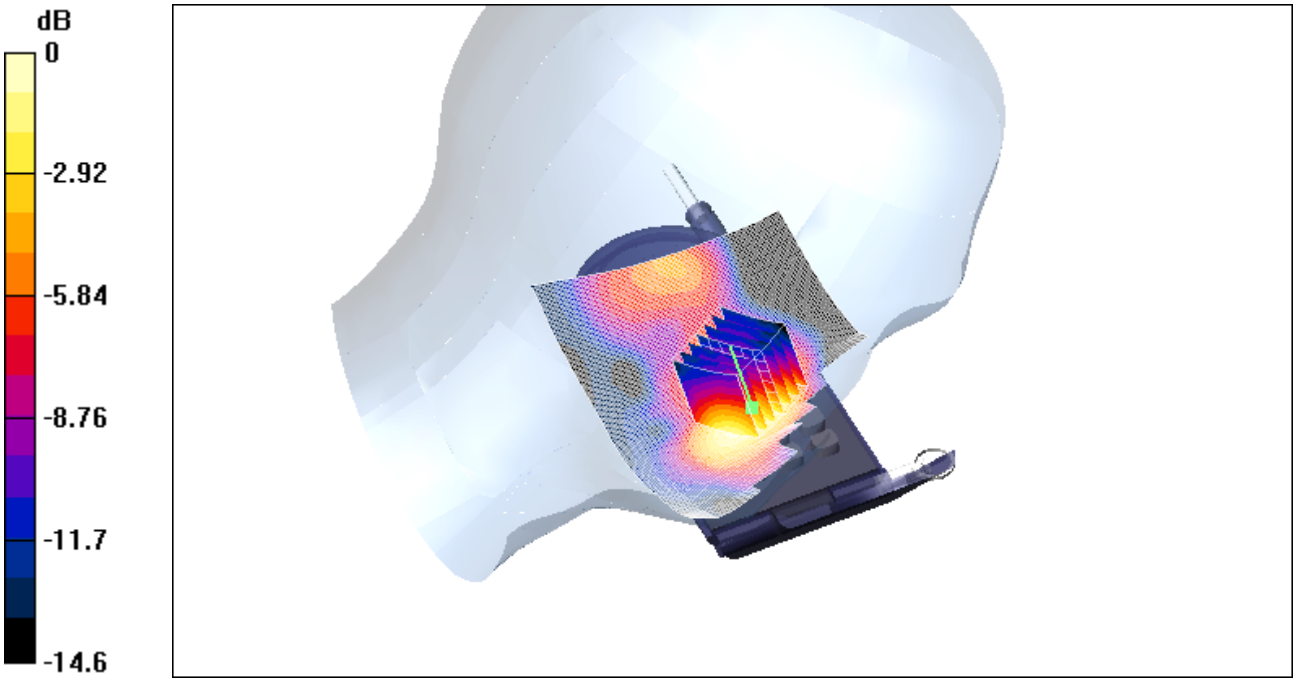

0 dB = 0.875mW/g

Date/Time: 08/14/03 09:52:52

Test Laboratory: ELECTRONIC TECHNOLOGY SYSTEMS DR. GENZ GMBH
File Name: 1900_left_ch810_tilted.da4

1900_left_ch810_tilted

DUT: E-GSM900/GSM1800/GSM1900 Triple Band GPRS Terminal Equipment; Type: -; Serial: I-2100
Program: GSM 1900

Communication System: GSM 1900; Frequency: 1909.8 MHz;Duty Cycle: 1:8
Medium: Head 1900 MHz (σ = 1.4255 mho/m, ε_r = 39.78, ρ = 1000 kg/m^3)
Phantom section: Left Section

DASY4 Configuration:

- Probe: ET3DV6 - SN1711; ConvF(5.3, 5.3, 5.3); Calibrated: 11/29/2002
- Sensor-Surface: 4mm (Mechanical And Optical Surface Detection)
- Electronics: DAE3 Sn522; Calibrated: 9/11/2002
- Phantom: SAM 12; Type: TP-1217; Serial: QD000P40CA
- Measurement SW: DASY4, V4.1 Build 47; Postprocessing SW: SEMCAD, V1.6 Build 115

left_ch810/Area Scan (101x141x1): Measurement grid: dx=10mm, dy=10mm
Reference Value = 13.2 V/m
Power Drift = 0.02 dB
Maximum value of SAR = 0.236 mW/g

left_ch810/Zoom Scan (7x7x7)/Cube 0: Measurement grid: dx=5mm, dy=5mm, dz=5mm
Peak SAR (extrapolated) = 0.334 W/kg
SAR(1 g) = 0.217 mW/g; SAR(10 g) = 0.132 mW/g
Reference Value = 13.2 V/m
Power Drift = 0.02 dB
Maximum value of SAR = 0.236 mW/g

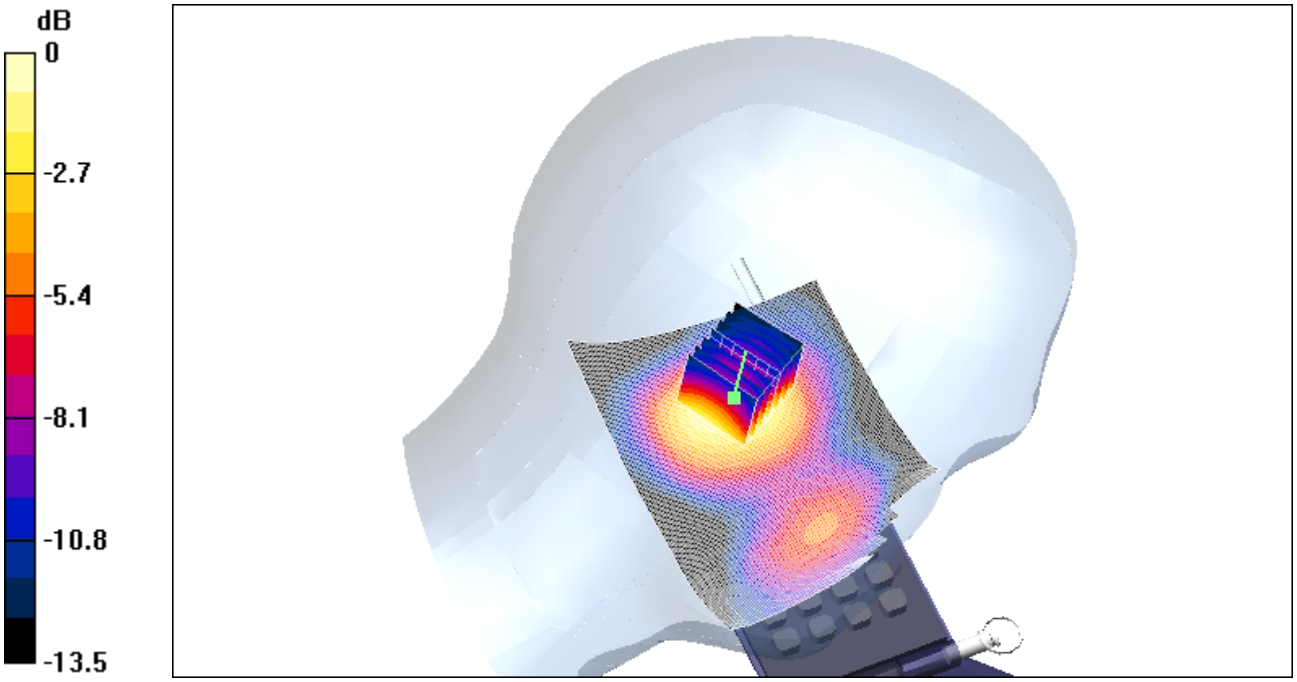

0 dB = 0.236mW/g

Date/Time: 08/18/03 15:38:01

Test Laboratory: ELECTRONIC TECHNOLOGY SYSTEMS DR. GENZ GMBH
File Name: 1900_flat_ch512_front_d1,5.da4

1900_flat_ch512_front_d1,5

DUT: E-GSM900/GSN1800/GSM1900Triple BandGPRS Terminal Equipment; Type: -; Serial: I- 2100
Program: 1900 body

Communication System: GSM 1900; Frequency: 1850.2 MHz;Duty Cycle: 1:8
Medium: Muscle 1900 MHz (σ = 1.51 mho/m, ε_r = 51.23, ρ = 1000 kg/m^3)
Phantom section: Flat Section

DASY4 Configuration:

- Probe: ET3DV6 - SN1711; ConvF(5, 5, 5); Calibrated: 11/29/2002
- Sensor-Surface: 4mm (Mechanical And Optical Surface Detection)
- Electronics: DAE3 Sn522; Calibrated: 9/11/2002
- Phantom: SAM 12; Type: TP-1217; Serial: QD000P40CA
- Measurement SW: DASY4, V4.1 Build 47; Postprocessing SW: SEMCAD, V1.6 Build 115

Flat 1900 body/Area Scan (61x111x1): Measurement grid: dx=10mm, dy=10mm
Reference Value = 7.88 V/m
Power Drift = -0.003 dB
Maximum value of SAR = 0.0918 mW/g

Flat 1900 body/Zoom Scan (7x7x7)/Cube 0: Measurement grid: dx=5mm, dy=5mm, dz=5mm
Peak SAR (extrapolated) = 0.129 W/kg
SAR(1 g) = 0.0853 mW/g; SAR(10 g) = 0.0548 mW/g
Reference Value = 7.88 V/m
Power Drift = -0.003 dB
Maximum value of SAR = 0.0903 mW/g

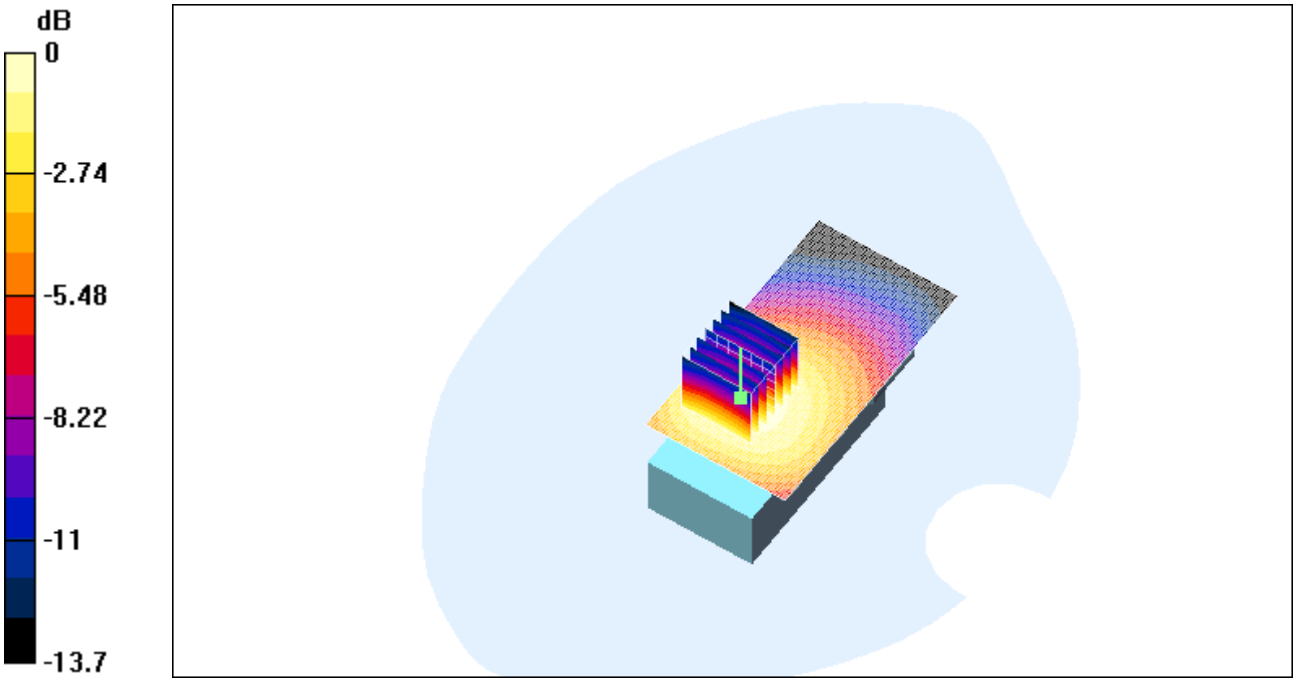

0 dB = 0.0903mW/g

Date/Time: 08/18/03 13:05:47

Test Laboratory: ELECTRONIC TECHNOLOGY SYSTEMS DR. GENZ GMBH
File Name: 1900_flat_ch512_back_d1,5.da4

1900_flat_ch512_back_d1,5

DUT: E-GSM900/GSN1800/GSM1900Triple BandGPRS Terminal Equipment; Type: -;
Serial: I- 2100
Program: 1900 body

Communication System: GSM 1900; Frequency: 1850.2 MHz;Duty Cycle: 1:8
Medium: Muscle 1900 MHz (σ = 1.51 mho/m, ε_r = 51.23, ρ = 1000 kg/m^3)
Phantom section: Flat Section

DASY4 Configuration:

- Probe: ET3DV6 - SN1711; ConvF(5, 5, 5); Calibrated: 11/29/2002
- Sensor-Surface: 4mm (Mechanical And Optical Surface Detection)
- Electronics: DAE3 Sn522; Calibrated: 9/11/2002
- Phantom: SAM 12; Type: TP-1217; Serial: QD000P40CA
- Measurement SW: DASY4, V4.1 Build 47; Postprocessing SW: SEMCAD, V1.6 Build 115

Flat 1900 body/Area Scan (61x111x1): Measurement grid: dx=10mm, dy=10mm
Reference Value = 11.4 V/m
Power Drift = 0.03 dB
Maximum value of SAR = 0.23 mW/g

Flat 1900 body/Zoom Scan (7x7x7)/Cube 0: Measurement grid: dx=5mm, dy=5mm, dz=5mm
Peak SAR (extrapolated) = 0.347 W/kg
SAR(1 g) = 0.212 mW/g; SAR(10 g) = 0.126 mW/g
Reference Value = 11.4 V/m
Power Drift = 0.03 dB
Maximum value of SAR = 0.223 mW/g 0B = 0,223mW/g

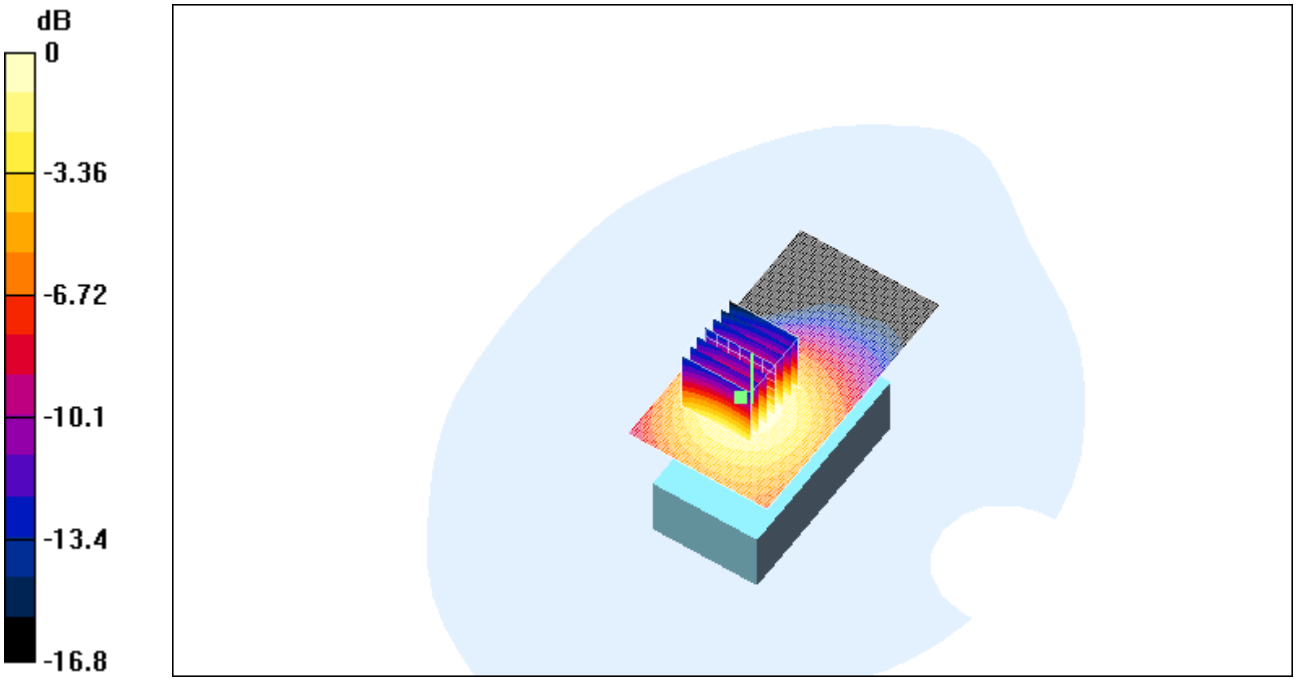

Date/Time: 08/18/03 14:36:42

Test Laboratory: ELECTRONIC TECHNOLOGY SYSTEMS DR. GENZ GMBH
File Name: 1900_flat_ch661_front_d1,5.da4

1900_flat_ch661_front_d1,5

DUT: E-GSM900/GSN1800/GSM1900Triple BandGPRS Terminal Equipment; Type: -; Serial: I- 2100
Program: 1900 body

Communication System: GSM 1900; Frequency: 1880 MHz;Duty Cycle: 1:8
Medium: Muscle 1900 MHz (σ = 1.58 mho/m, ε_r = 51.02, ρ = 1000 kg/m^3)
Phantom section: Flat Section

DASY4 Configuration:

- Probe: ET3DV6 - SN1711; ConvF(5, 5, 5); Calibrated: 11/29/2002
- Sensor-Surface: 4mm (Mechanical And Optical Surface Detection)
- Electronics: DAE3 Sn522; Calibrated: 9/11/2002
- Phantom: SAM 12; Type: TP-1217; Serial: QD000P40CA
- Measurement SW: DASY4, V4.1 Build 47; Postprocessing SW: SEMCAD, V1.6 Build 115

Flat 1900 body/Area Scan (61x111x1): Measurement grid: dx=10mm, dy=10mm
Reference Value = 7.95 V/m
Power Drift = 0.03 dB
Maximum value of SAR = 0.103 mW/g

Flat 1900 body/Zoom Scan (7x7x7)/Cube 0: Measurement grid: dx=5mm, dy=5mm, dz=5mm
Peak SAR (extrapolated) = 0.151 W/kg
SAR(1 g) = 0.0979 mW/g; SAR(10 g) = 0.062 mW/g
Reference Value = 7.95 V/m
Power Drift = 0.03 dB
Maximum value of SAR = 0.106 mW/g

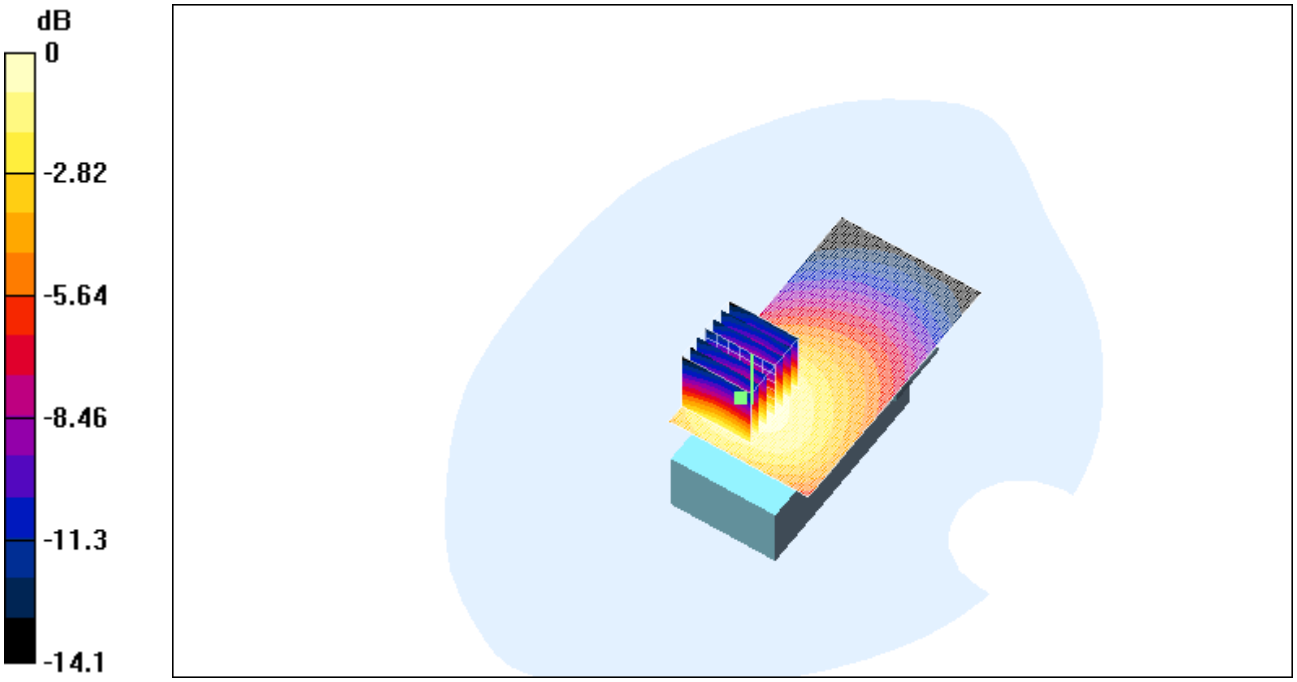

0 dB = 0.106mW/g

Date/Time: 08/18/03 12:33:06

Test Laboratory: ELECTRONIC TECHNOLOGY SYSTEMS DR. GENZ GMBH
File Name: 1900_flat_ch661_back_d1,5.da4

1900_flat_ch661_back_d1,5

DUT: E-GSM900/GSN1800/GSM1900Triple BandGPRS Terminal Equipment; Type: -; Serial: I- 2100
Program: 1900 body

Communication System: GSM 1900; Frequency: 1880 MHz;Duty Cycle: 1:8
Medium: Muscle 1900 MHz (σ = 1.55 mho/m, ε_r = 51.13, ρ = 1000 kg/m^3)
Phantom section: Flat Section

DASY4 Configuration:

- Probe: ET3DV6 - SN1711; ConvF(5, 5, 5); Calibrated: 11/29/2002
- Sensor-Surface: 4mm (Mechanical And Optical Surface Detection)
- Electronics: DAE3 Sn522; Calibrated: 9/11/2002
- Phantom: SAM 12; Type: TP-1217; Serial: QD000P40CA
- Measurement SW: DASY4, V4.1 Build 47; Postprocessing SW: SEMCAD, V1.6 Build 115

Flat 1900 body/Area Scan (61x111x1): Measurement grid: dx=10mm, dy=10mm
Reference Value = 12.4 V/m
Power Drift = -0.01 dB
Maximum value of SAR = 0.252 mW/g

Flat 1900 body/Zoom Scan (7x7x7)/Cube 0: Measurement grid: dx=5mm, dy=5mm, dz=5mm
Peak SAR (extrapolated) = 0.402 W/kg
SAR(1 g) = 0.24 mW/g; SAR(10 g) = 0.143 mW/g
Reference Value = 12.4 V/m
Power Drift = -0.01 dB
Maximum value of SAR = 0.255 mW/g

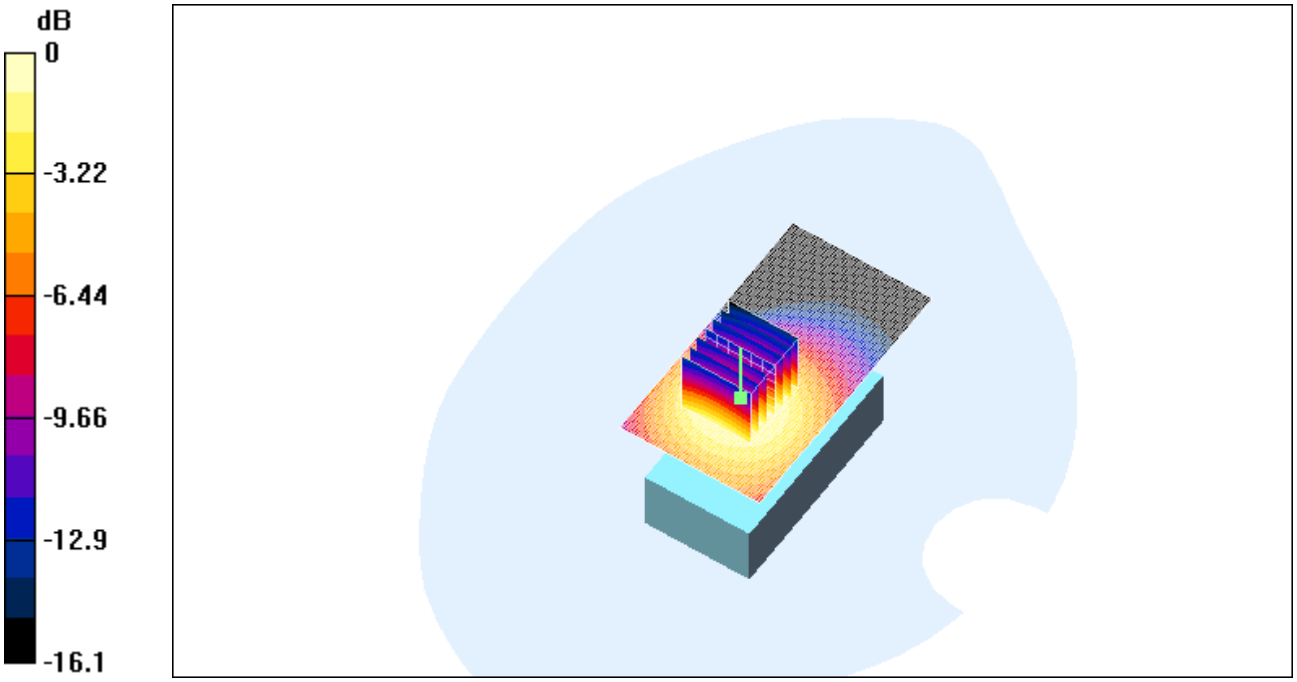

0 dB = 0.255mW/g

Date/Time: 08/18/03 15:09:12

Test Laboratory: ELECTRONIC TECHNOLOGY SYSTEMS DR. GENZ GMBH
File Name: 1900_flat_ch810_front_d1,5.da4

1900_flat_ch810_front_d1,5

DUT: E-GSM900/GSN1800/GSM1900Triple BandGPRS Terminal Equipment; Type: -; Serial: I- 2100
Program: 1900 body

Communication System: GSM 1900; Frequency: 1909.8 MHz;Duty Cycle: 1:8
Medium: Muscle 1900 MHz (σ = 1.58 mho/m, ε_r = 51.02, ρ = 1000 kg/m^3)
Phantom section: Flat Section

DASY4 Configuration:

- Probe: ET3DV6 - SN1711; ConvF(5, 5, 5); Calibrated: 11/29/2002
- Sensor-Surface: 4mm (Mechanical And Optical Surface Detection)
- Electronics: DAE3 Sn522; Calibrated: 9/11/2002
- Phantom: SAM 12; Type: TP-1217; Serial: QD000P40CA
- Measurement SW: DASY4, V4.1 Build 47; Postprocessing SW: SEMCAD, V1.6 Build 115

Flat 1900 body/Area Scan (61x111x1): Measurement grid: dx=10mm, dy=10mm
Reference Value = 7.92 V/m
Power Drift = -0.01 dB
Maximum value of SAR = 0.103 mW/g

Flat 1900 body/Zoom Scan (7x7x7)/Cube 0: Measurement grid: dx=5mm, dy=5mm, dz=5mm
Peak SAR (extrapolated) = 0.133 W/kg
SAR(1 g) = 0.0853 mW/g; SAR(10 g) = 0.0542 mW/g
Reference Value = 7.92 V/m
Power Drift = -0.01 dB
Maximum value of SAR = 0.0903 mW/g

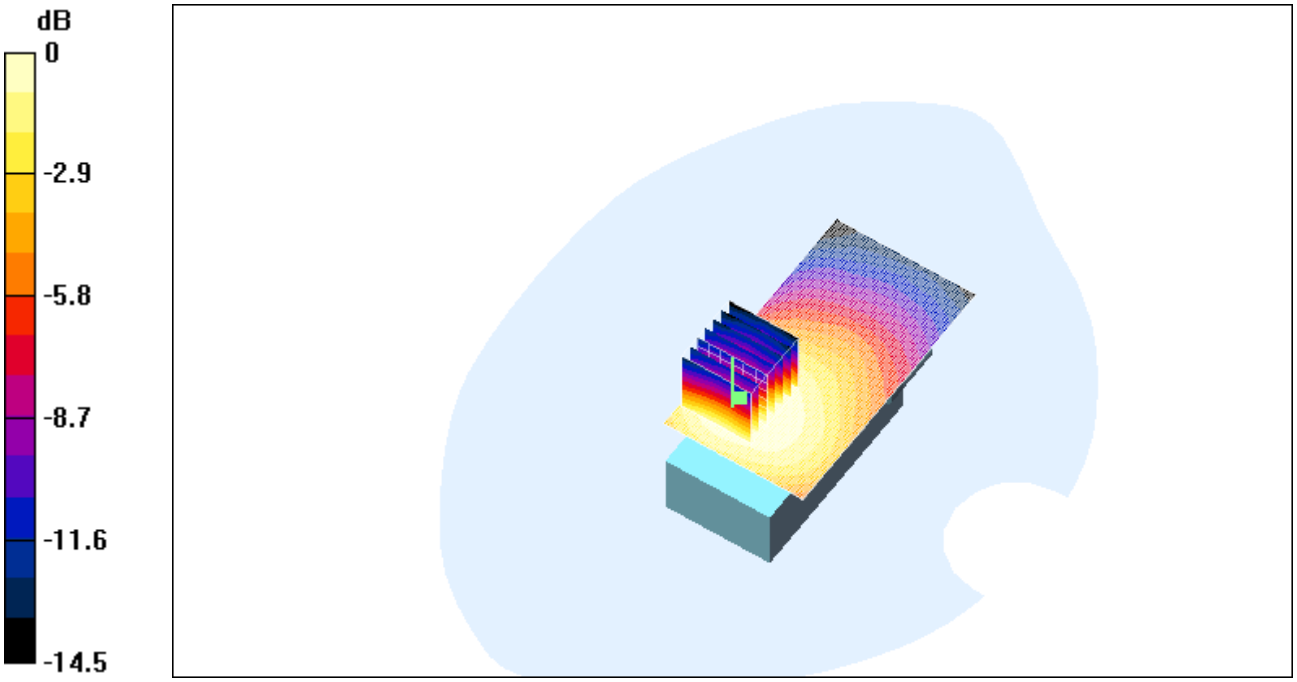

0 dB = 0.0903mW/g

Date/Time: 08/18/03 13:31:37

Test Laboratory: ELECTRONIC TECHNOLOGY SYSTEMS DR. GENZ GMBH
File Name: 1900_flat_ch810_back_d1,5.da4

1900_flat_ch810_back_d1,5

DUT: E-GSM900/GSN1800/GSM1900Triple BandGPRS Terminal Equipment; Type: -; Serial: I- 2100
Program: 1900 body

Communication System: GSM 1900; Frequency: 1909.2 MHz;Duty Cycle: 1:8
Medium: Muscle 1900 MHz (σ = 1.51 mho/m, ε_r = 51.23, ρ = 1000 kg/m^3)
Phantom section: Flat Section

DASY4 Configuration:

- Probe: ET3DV6 - SN1711; ConvF(5, 5, 5); Calibrated: 11/29/2002
- Sensor-Surface: 4mm (Mechanical And Optical Surface Detection)
- Electronics: DAE3 Sn522; Calibrated: 9/11/2002
- Phantom: SAM 12; Type: TP-1217; Serial: QD000P40CA
- Measurement SW: DASY4, V4.1 Build 47; Postprocessing SW: SEMCAD, V1.6 Build 115

Flat 1900 body/Area Scan (61x111x1): Measurement grid: dx=10mm, dy=10mm
Reference Value = 11.2 V/m
Power Drift = 0.05 dB
Maximum value of SAR = 0.202 mW/g

Flat 1900 body/Zoom Scan (7x7x7)/Cube 0: Measurement grid: dx=5mm, dy=5mm, dz=5mm
Peak SAR (extrapolated) = 0.313 W/kg
SAR(1 g) = 0.189 mW/g; SAR(10 g) = 0.114 mW/g
Reference Value = 11.2 V/m
Power Drift = 0.05 dB
Maximum value of SAR = 0.201 mW/g

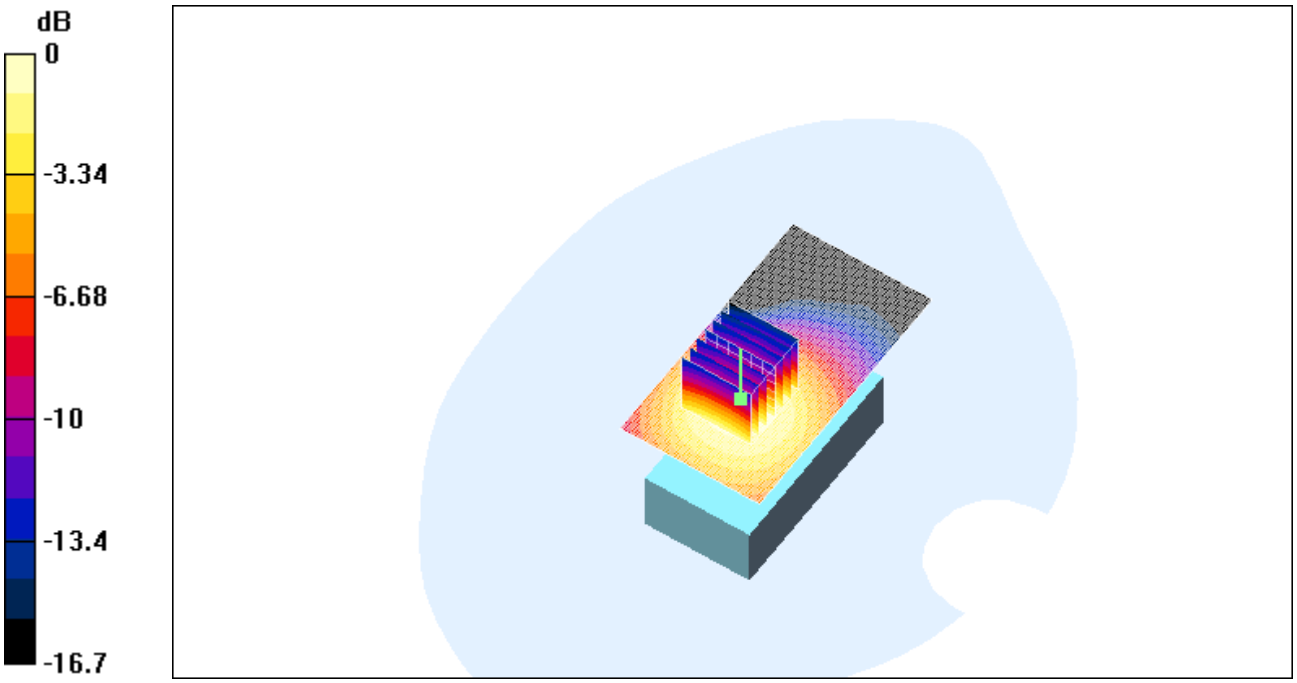

0 dB = 0.201mW/g

Date/Time: 08/13/03 18:54:35

Test Laboratory: ELECTRONIC TECHNOLOGY SYSTEMS DR. GENZ GMBH
File Name: 1900_right_ch512_cheek.da4

Z-axis scan

DUT: E-GSM900/GSM1800/GSM1900 Triple Band GPRS Terminal Equipment; Type: -; Serial: I-2100
Program: GSM 1900

Communication System: GSM 1900; Frequency: 1850.2 MHz;Duty Cycle: 1:8
Medium: Head 1900 MHz (σ = 1.3685 mho/m, ε_r = 39.9283, ρ = 1000 kg/m^3)
Phantom section: Right Section

DASY4 Configuration:

- Probe: ET3DV6 - SN1711; ConvF(5.3, 5.3, 5.3); Calibrated: 11/29/2002
- Sensor-Surface: 4mm (Mechanical And Optical Surface Detection)
- Electronics: DAE3 Sn522; Calibrated: 9/11/2002
- Phantom: SAM 12; Type: TP-1217; Serial: QD000P40CA
- Measurement SW: DASY4, V4.1 Build 47; Postprocessing SW: SEMCAD, V1.6 Build 115
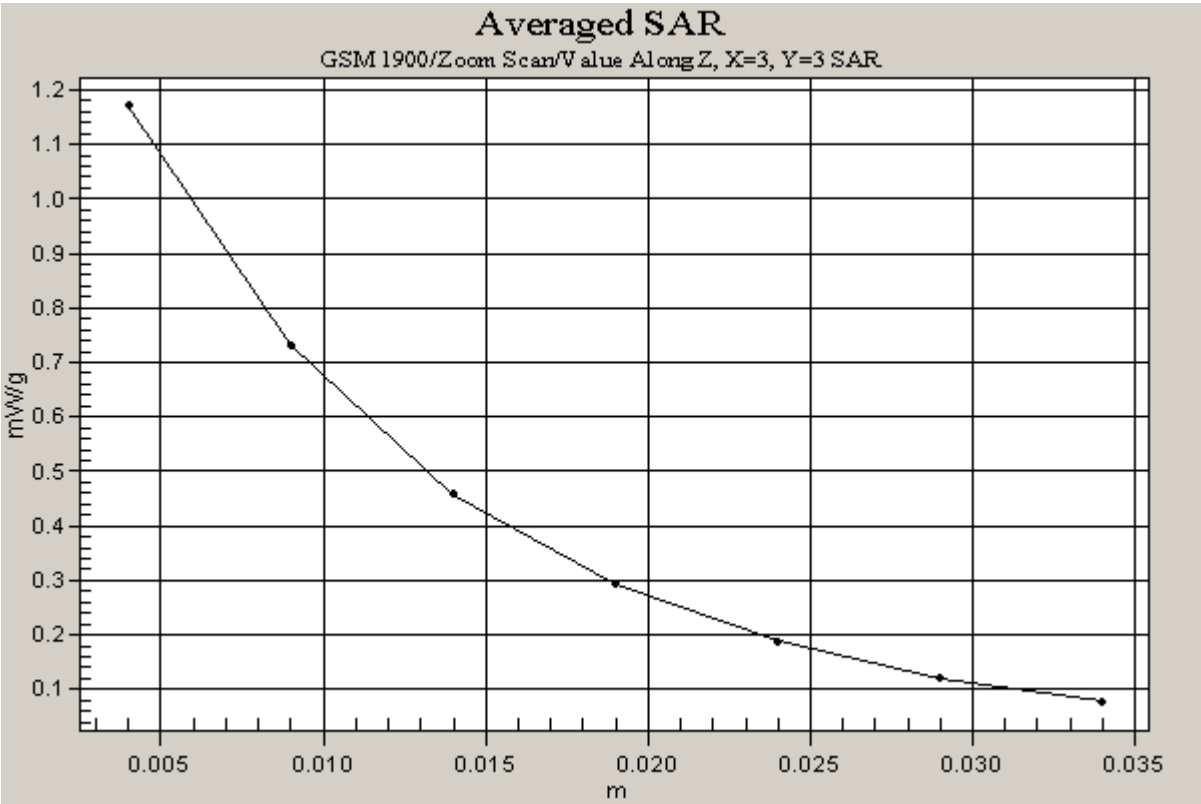
right_ch512/Zoom Scan (7x7x7)/Cube 0: Measurement grid: dx=5mm, dy=5mm, dz=5mm
Peak SAR (extrapolated) = 1.7 W/kg
SAR(1 g) = 1.08 mW/g; SAR(10 g) = 0.63 mW/g
Reference Value = 16.3 V/m
Power Drift = 0.1 dB
Maximum value of SAR = 1.17 mW/g