HYUNDAI CALIBRATION & CERTIFICATION TECH. CO., LTD.

PRODUCT COMPLIANCE DIVISION
SAN 136-1, AMI-RI , BUBAL-EUP, ICHEON-SI, KYOUNGKI-DO, 467-701, KOREA
TEL: +82 31 639 8518 FAX: +82 31 639 8525 www.hct.co.kr

CERTIFICATE OF COMPLIANCE

FCC Part 24 Certification

Innostream Inc.
9F, Allianz. Bldg, 267-3 , Seohyeon-dong,
Bundang-gu, Sungnam-shi, Kyongki-do, Korea

FRN: 0009349481

Date of Issue: March 3, 2005
Test Report No.: HCT-SAR05-0302
Test Site: HYUNDAI CALIBRATION & CERTIFICATION TECHNOLOGIES CO., LTD.
FRN: 0005866421

FCC ID : **RJAINNO-P10**

APPLICANT : **Innostream Inc.**

EUT Type:	Single-Band GSM Phone (GSM1900) - Prototype
TX Frequency:	1850.20MHz – 1909.80MHz (GSM1900)
Rx Frequency:	1930.20MHz – 1989.80MHz (GSM1900)
Max. RF Output Power:	0.656 W EIRP GSM1900 (28.17 dBm)
Trade Name/Model(s):	Innostream / INNO-P10
FCC Classification:	Licensed Portable Transmitter Held to Ear (PCE)
Application Type:	Certification
FCC Rule Part(s):	§24(E), §2
Maximum SAR:	0.181W/kg GSM1900 Head SAR; 0.251W/kg GSM1900 Body SAR
Antenna Specifications:	Manufacturer: Fractus Part No.: ACQ-048 (Length=38.0 mm)
Emission Designator(s):	300KGXW (GSM)

This equipment has been shown to be capable of compliance with the applicable technical standards as indicated in the measurement report and was tested in accordance with the measurement procedures specified in ℱ 2.947.

I attest to the accuracy of data. All measurements reported herein were performed by me or were made under my supervision and are correct to the best of my knowledge and belief. I assume full responsibility for the completeness of these measurements and vouch for the qualifications of all persons taking them.

Hyundai C-Tech Co., Ltd. Certifies that no party to this application has been denied FCC benefits pursuant to section 5301 of the Anti- Drug Abuse Act of 1998, 21 U.S. C. 853(a)

Ki Soo Kim

Report prepared by : Ki-Soo Kim

Manager of Product Compliance Team

This report only responds to the tested sample and may not be reproduced, except in full, without written approval of the HCT Co., Ltd.

Table of Contents

ATTACHMENT A: COVER LETTER(S)

ATTACHMENT B: ATTESTATION STATEMENT(S)

ATTACHMENT C: TEST REPORT

1.1 SCOPE ---------- 3

2.1 INTRODUCTION ---------- 4

3.1 DESCRIPTION OF TESTS---------- 5-11

4.1 EQUIVALENT ISOTROPIC RADIATED POWER---------- 12

5.1 RADIATED MEASUREMENTS---------- 13-15

6.1 FREQUENCY STABILITY ---------- 16

7.1 PLOTS OF EMISSIONS---------- 17

8.1 LIST OF TEST EQUIPMENT ---------- 18

9.1 SAMPLE CALCULATIONS ---------- 19

10.1 CONCLUSION---------- 20

ATTACHMENT D: TEST PLOTS

ATTACHMENT E: FCC ID LABEL & LOCATION

ATTACHMENT F: TEST SETUP PHOTOGRAPHS

ATTACHMENT G: EXTERNAL PHOTOGRAPHS

ATTACHMENT H: INTERNAL PHOTOGRAPHS

ATTACHMENT I: BLOCK DIAGRAM (S)

ATTACHMENT J: CIRCUIT DIAGRAMS

ATTACHMENT K: PARTS LIST

ATTACHMENT L: OPERATIONAL DESCRIPTION

ATTACHMENT M: USER'S MANUAL

ATTACHMENT N: SAR MEASUREMENT REPORT

ATTACHMENT O: SAR TEST DATA

ATTACHMENT P: SAR TEST SETUP PHOTOGRAPHS

ATTACHMENT Q: DIPOLE VALIDATION

ATTACHMENT R: PROBE CALIBRATION

ATTACHMENT S: DIPOLE CALIBRATION

MEASUREMENT REPORT

1.1 SCOPE

Measurement and determination of electromagnetic emissions (EME) of radio frequency devices including intentional and/or unintentional radiators for compliance with the technical rules and regulations of the Federal Communications Commission.

General Information

Company Name:	**Innostream Inc.**
Address:	**9F, Allianz. Bldg, 267-3 , Seohyeon-dong, Bundang-gu, Sungnam-shi, Kyongki-do, Korea**
Attention:	**Byong-yol Lee - Project Manager**
Tel. / Fax :	**82-31-707-3860 / 82-31-702-5399**
E-Mail :	**franklee@innostream.com**

• EUT Type:	Single-Band GSM Phone (GSM1900)
• Trade Name:	Innostream
• Model(s):	INNO-P10
• FCC ID:	RJAINNO-P10
• Serial Number(s):	RJA20050300001
• Tx Frequency:	1850.20 – 1909.80 MHz (GSM1900)
• Rx Frequency:	1930.20 – 1989.80 MHz (GSM1900)
• Application Type:	Certification
• FCC Classification:	Licensed Portable Transmitter Held to Ear (PCE)
• FCC Rule Part(s):	§24(E); §2
• Modulation(s):	GSM
• Antenna Type:	Fixed
• Date(s) of Tests:	March 3, 2005
• Place of Tests:	Hyundai C-Tech. EMC Lab. Icheon, Kyounki-Do, KOREA
• Report Serial No.:	HCT-SAR05-0302 Icheon, Kyounki-Do, KOREA

2.1 INTRODUCTION

EUT DESCRIPTION

Innostream Inc. INNO-P10 SINGLE MODE GSM Phone.
Its basic purpose is used for communications. It transmits from GSM1900 (1850.20 – 1909.80MHz) and receives from GSM1900 1930.20MHz – 1989.80MHz.

The RF power is rated at and GSM1900 (0.656W).

MEASURING INSTRUMENT CALIBRATION

The measuring equipment, which was utilized in performing the tests documented herein, has been calibrated in accordance with the manufacturer's recommendations for utilizing calibration equipment, which is traceable to recognized national standards.

Test Facility

The open area test site and conducted measurement facility used to collect the radiated data are located at the 254-1, Maekok-Ri, Hobup-Myun, Ichon-Si, Kyoungki-Do, 467-701, KOREA. The site is constructed in conformance with the requirements of ANSI C63.4 and CISPR Publication 22. Detailed description of test facility was submitted to the Commission and accepted dated July 23, 2003(Registration Number: 90661)

3.1 DESCRIPTION OF TESTS

3.2 Effective Radiated Power.

Test Set-up

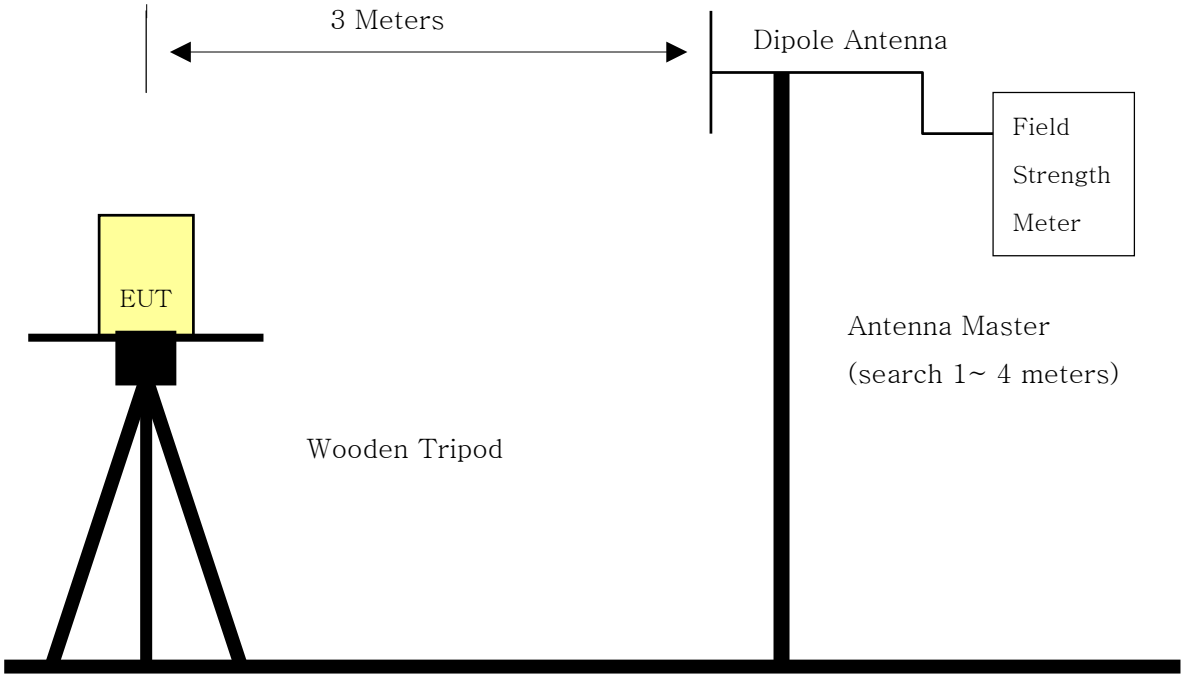

[Open Field Test Site]

Test Procedure

The measurement facilities used for this test have been documented in previous filings with the commission pursuant to section 2.948.

The open field test site is situated in open field with ground screen whose site attenuation characteristics meet ANSI C63.4 –1992. A mast capable of lifting the receiving antenna from a height of one to four meters is used together with a routable wooden platform mounted at three from the antenna mast.

1) The EUT mounted on a wooden tripod is 0.8 meter above test site ground level.
2) During the test , the turn table is rotated and the antenna height is also varied from 1 to 4 meters until the maximum signal is found.
3) Record the field strength meter's level.
4) Replace the EUT with λ / 2 dipole antenna that is connected to a calibrated signal generator.
5) Increase the signal generator output till the field strength meter's level is equal to the item(4).
6) The signal generator output level is the rating of effective radiated power(ERP).
7) The instrument settings used (RBW/ VBW) during ERP/ EIRP output power measurement are as Blows ;

   -. Below 1GHz : RBW 100KHz, VBW 300KHz / Above 1GHz : RBW 1MHz, VBW 1MHz

3.3 Occupied bandwidth.

Test Set-up

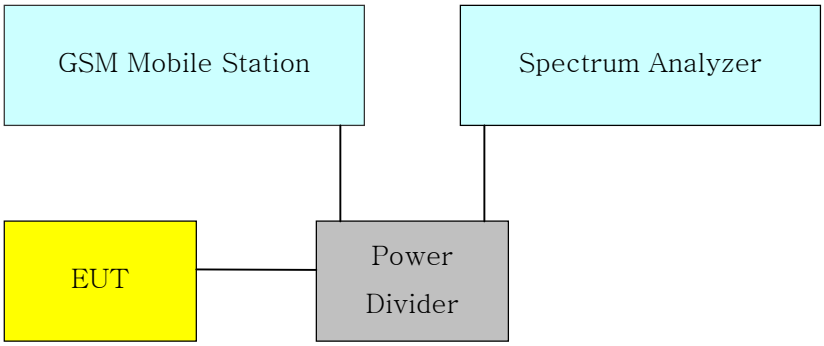

(a) On any frequency outside a licensee's frequency block, the power of any emission shall be attenuated below the transmitter power (P) by at least 43 + 10 log(P) dB.

(b) Compliance with these provisions is based on the use of measurement instrumentation employing a resolution bandwidth of 1 MHz or greater. However, in the 1 MHz bands immediately outside and adjacent to the frequency block a resolution bandwidth of at least one percent of the emission bandwidth of the fundamental emission of the transmitter may be employed. The emission bandwidth is defined as the width of the signal between two points, one below the carrier center frequency and one above the carrier center frequency, outside of which all emission are attenuated at least 26 dB below the transmitter power.

Note: The test plots by the 99% power method defined FCC Rule 2.1049 is included in this test report.

(c) When measuring the emission limits, the nominal carrier frequency shall be adjusted as close to the licensee's frequency block edges, both upper and lower, as the design permits.

(d) The measurement of emission power can be expressed in peak or average values, provided they are expressed in the same parameters as the transmitter power.

3.4 Spurious and Harmonic Emissions at Antenna Terminal.

Test Set-up

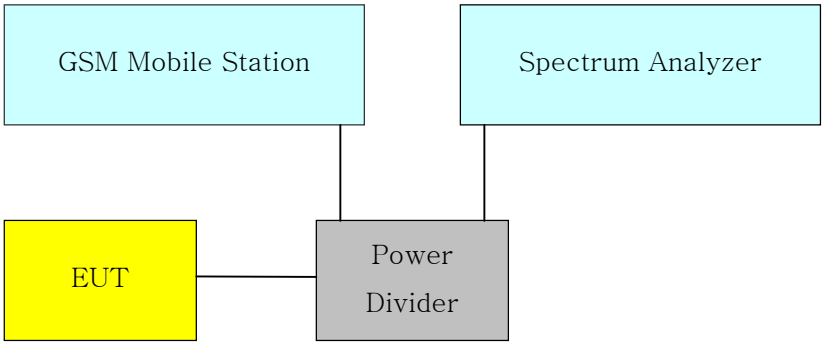

The level of the carrier and the various conducted spurious and harmonic frequencies is measured by means of a calibrated spectrum analyzer. The spectrum is scanned from the lowest frequency generated in the equipment up to 10 GHz. The transmitter is modulated with a 2500Hz tone at a level of 16dB greater than that required to provided 50% modulation.

At the input terminals of the spectrum analyzer, an isolator (RF circulator with on port terminated with 50 ohms) and an 870 MHz to 890 MHz band pass filter is connected between the test transceiver (for conducted tests) or the receive antenna (for radiated tests) and the analyzer. The rejection of the bandpass filter to signals in the 825 – 845 MHz range is adequate to limit the transmit energy from the test transceiver which appears to a level which will allow the analyzer to measure signals less than –90dBm. Calibration of the test receiver is performed in the 870 – 890 MHz range to insure accuracy to allow variation in the bandpass filter insertion loss to be calibrated.

3.5 Field strength of spurious radiation .

Test Set-up

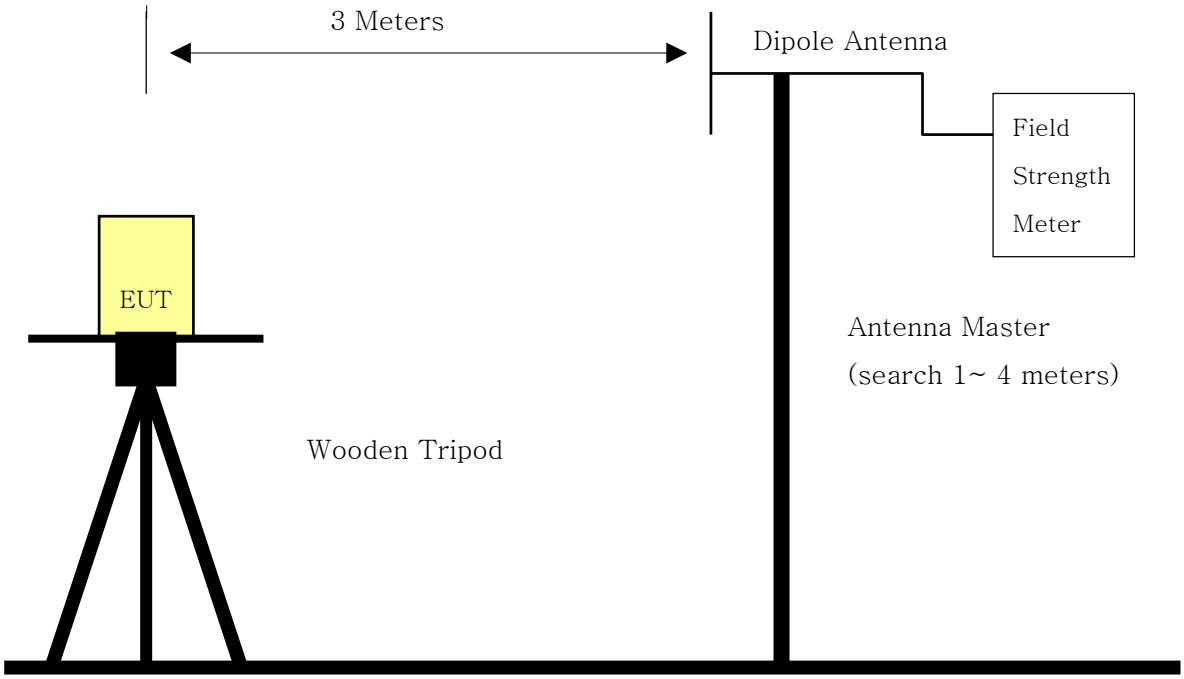

[Open Field Test Site]

Test Procedure

The measurement facilities used for this test have been documented in previous filings with the commission pursuant to section 2.948.
The open field test site is situated in open field with ground screen whose site attenuation characteristics meet ANSI C63.4 –1992. A mast capable of lifting the receiving antenna from a height of one to four meters is used together with a rotable wooden platform mounted at three from the antenna mast.

1) The unit mounted on a wooden table 1.5m × 1.0m × 0.80 is 0.8 meter above test site ground level.
2) During the emission test , the turntable is rotated and the EUT is manipulated to find the configuration resulting in maximum emission under normal condition of installation and operation.
3) The antenna height and polarization are also varied from 1 to 4 meters until the maximum signal is found.
4) The spectrum shall be scanned up to the 10th harmonic of the fundamental frequency.
5) The instrument settings used (RBW/ VBW) during ERP/ EIRP output power measurement are as belows ;

   -. Below 1GHz : RBW 100KHz, VBW 300KHz

   -. Above 1GHz : RBW 1MHz, VBW 1MHz

3.6 Frequency stability .

3.6.1Frequency stability with variation of ambient temperature.

Test Set-up

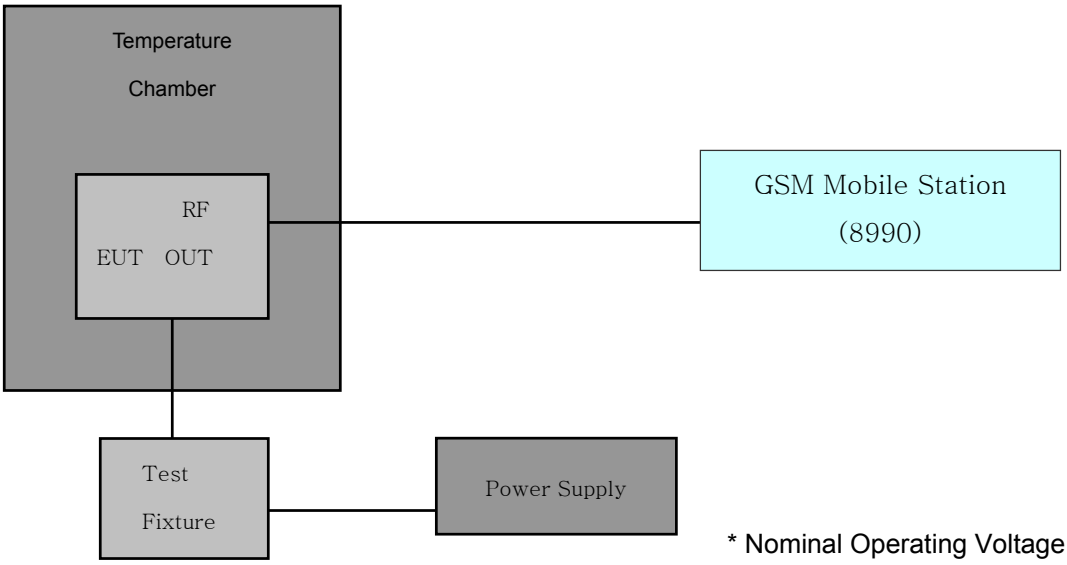

Test Procedure

The frequency stability of the transmitter is measured by:

a.) **Temperature:** The temperature is varied from -30 °C to +60 °C using an environmental chamber.

b.) **Primary Supply Voltage:** The primary supply voltage is varied from 85% to 115% of the voltage normally at the input to the device or at the power supply terminals if cables are not normally supplied.

Specification — The frequency stability shall be sufficient to ensure that the fundamental emission stays within the authorized frequency block. The frequency stability of the transmitter shall be maintained within ±0.0001 (±1 ppm) of the center frequency.

Time Period and Procedure:

1. The carrier frequency of the transmitter and the individual oscillators is measured at room temperature (25 °C to 27 °C to provide a reference).
2. The equipment is subjected to an overnight “soak” at -30 °C without any power applied.
3. After the overnight “soak” at 30 °C (usually 14-16 hours), the equipment is turned on in a “standby” condition for one minute before applying power to the transmitter. Measurement of the carrier frequency of the transmitter and the individual oscillators is made within a three minute interval after applying power to the transmitter.
4. Frequency measurements are made at 10 °C interval up to room temperature. At least a period of one and one half-hour is provided to allow stabilization of the equipment at each temperature level.
5. Again the transmitter carrier frequency and the individual oscillators is measured at room temperature to begin measurement of the upper temperature levels.
6. Frequency were made at 10 intervals starting at 30 °C up to +50 °C allowing at least two hours at each temperature for stabilization. In all measurements the frequency is measured within three minutes after applying power to the transmitter.
7. The artificial load is mounted external to the temperature chamber.

NOTE: The EUT is tested down to the battery endpoint.

3.6.2 Frequency stability with variation of primary supply voltage.

Test Set-up

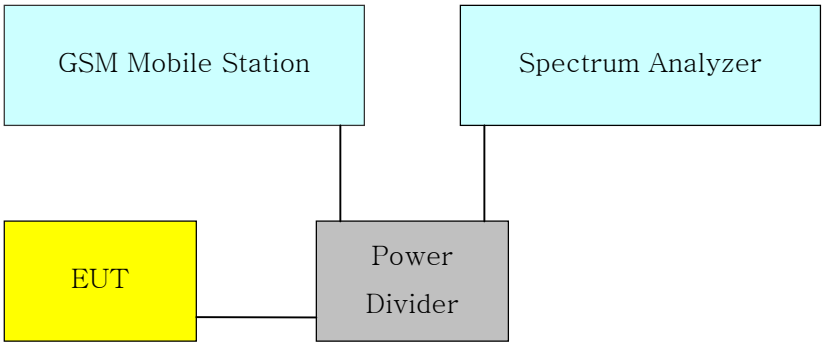

Test Procedure

1) The primary supply is varied in steps of 5% from 85 to 115% of the nominal supply voltage, or reduce primary supply voltage to the battery operating end point.
2) The frequency is recorded each 5% step.

3.7 Frequency stability .

3.7.1 Cellular - Mobile Frequency Blocks

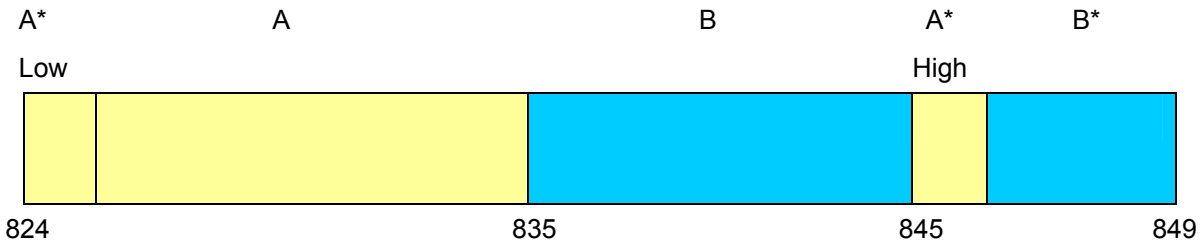

BLOCK 1: 824 – 835 MHz (A* Low + A)

BLOCK 2: 835 – 845 MHz (B)

BLOCK 3: 845 – 846.5 MHz (A* High)

BLOCK 4: 846.5 – 849 MHz (B*)

3.7.2 Cellular - Mobile Frequency Blocks

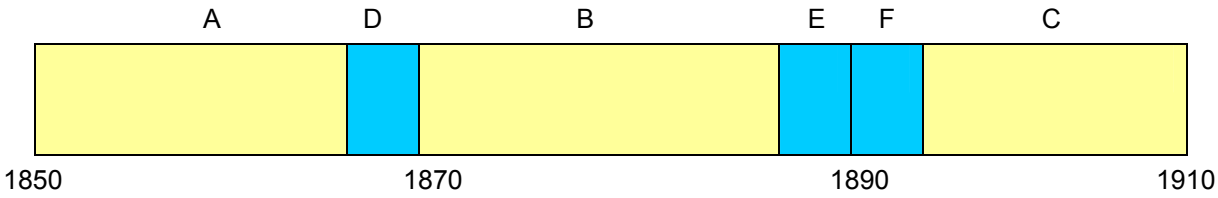

BLOCK 1: 1850 – 1865 MHz (A)

BLOCK 2: 1865 – 1870 MHz (D)

BLOCK 3: 1870 – 1885 MHz (B)

BLOCK 4: 1885 – 1890 MHz (E)

BLOCK 5: 1890 – 1895 MHz (F)

BLOCK 6: 1895 – 1910 MHz (C)

4.1 Test Data

4.2 Equivalent Isotropic Radiated Power (E.I.R.P.) PCS CDMA

A. Power: High (GSM1900 Mode)

Freq. (MHz)	REF. LEVEL (dBm)	POL (H/V)	Azimuth (o angle)	ERP (W)	ERP (dBm)	BATTERY
1850.20	-26.89	V	60°	0.656	28.17	Standard
1880.00	-26.96	V	60°	0.646	28.10	Standard
1909.80	-27.25	V	60°	0.604	27.81	Standard

Note: Standard batteries are the only options for this phone

NOTES:

Effective Radiated Power Output Measurements by Substitution Method according to ANSI/TIA/EIA-603-A-2001, Aug. 15, 2001:

The EUT was placed on a wooden turn table 3-meters from the receive antenna. The receive antenna height and turntable rotation was adjusted for the highest reading on the receive spectrum analyzer. For CDMA signals, a peak detector is used, with RBW=VBW=3MHz. For AMPS, GSM, and NADC TDMA signals, a peak detector is used, with RBW=VBW=1MHz. A Horn antenna was substituted in place of the EUT. This Horn antenna was driven by a signal generator and the level of the signal generator was adjusted to obtain the same receive spectrum analyzer reading. The conducted power at the terminals of the Horn antenna is measured. The difference between the gain of the horn and an isotropic antenna is taken into consideration and the EIRP is recorded.

5.1 Test Data

5.2 GSM1900 Radiated Measurements

Field Strength of SPURIOUS Radiation

- ▣ OPERATING FREQUENCY: 1850.20 MHz
- ▣ CHANNEL: 512 (Low)
- ▣ MEASURED OUTPUT POWER: 28.17dBm = 0.656 W
- ▣ MODULATION SIGNAL: GSM (Internal)
- ▣ DISTANCE: 3 meters
- ▣ LIMIT: -(43 + 10 $\log_{10}$ (W)) = -41.17 dBc

Freq. (MHz)	LEVEL@ ANTENNA TERMINALS (dBm)	SUBSTITUTE ANTENNA GAIN (dBi)	CORRECT GENERATOR LEVEL (dBm)	POL (H/V)	(dBc)
3700.40	-68.6	12.4	-56.2	V	-74.5
5550.60	-65.3	11.7	-53.6	V	-73.1
7400.80	-70.8	11.5	-59.3	V	-79.5

NOTES:

Radiated Spurious Emission Measurements by Substitution Method

according to ANSI/TIA/EIA-603-A-2001, Aug. 15, 2001:

The EUT was placed on a wooden turn table 3-meters from the receive antenna. The receive antenna height and turntable rotation was adjusted for the highest reading on the receive spectrum analyzer. For CDMA signals, a peak detector is used, with RBW=VBW=3MHz. For AMPS, GSM, and NADC TDMA signals, a peak detector is used, with RBW=VBW=1MHz. A half-wave dipole was substituted in place of the EUT. This dipole antenna was driven by a signal generator and the level of the signal generator was adjusted to obtain the same receive spectrum analyzer reading. This spurious level is recorded. For readings above 1GHz, the above procedure is repeated using horn antennas and the difference between the gain of the horn and an isotropic or dipole antenna are taken into consideration.

5.1 Test Data

5.3 GSM1900 Radiated Measurements

Field Strength of SPURIOUS Radiation

- OPERATING FREQUENCY: 1880.00 MHz
- CHANNEL: 661 (Mid)
- MEASURED OUTPUT POWER: 28.17dBm = 0.656 W
- MODULATION SIGNAL: GSM (Internal)
- DISTANCE: 3 meters
- LIMIT: -(43 + 10 $\log_{10}$ (W)) = -41.17 dBc

Freq. (MHz)	LEVEL@ ANTENNA TERMINALS (dBm)	SUBSTITUTE ANTENNA GAIN (dBi)	CORRECT GENERATOR LEVEL (dBm)	POL (H/V)	(dBc)
3760.00	-66.7	12.4	-54.3	V	-72.6
5460.00	-67.0	11.7	-55.3	V	-74.8
7520.00	-72.7	11.5	-61.2	V	-81.4

NOTES:

Radiated Spurious Emission Measurements by Substitution Method

according to ANSI/TIA/EIA-603-A-2001, Aug. 15, 2001:

The EUT was placed on a wooden turn table 3-meters from the receive antenna. The receive antenna height and turntable rotation was adjusted for the highest reading on the receive spectrum analyzer. For CDMA signals, a peak detector is used, with RBW=VBW=3MHz. For AMPS, GSM, and NADC TDMA signals, a peak detector is used, with RBW=VBW=1MHz.A half-wave dipole was substituted in place of the EUT. This dipole antenna was driven by a signal generator and the level of the signal generator was adjusted to obtain the same receive spectrum analyzer reading. This spurious level is recorded. For readings above 1GHz, the above procedure is repeated using horn antennas and the difference between the gain of the horn and an isotropic or dipole antenna are taken into consideration.

5.1 Test Data

5.4 GSM1900 Radiated Measurements

Field Strength of SPURIOUS Radiation

- OPERATING FREQUENCY: 1909.80 MHz
- CHANNEL: 810 (High)
- MEASURED OUTPUT POWER: 28.17dBm = 0.656 W
- MODULATION SIGNAL: GSM (Internal)
- DISTANCE: 3 meters
- LIMIT: -(43 + 10 $\log_{10}$ (W)) = -41.17 dBc

Freq. (MHz)	LEVEL@ ANTENNA TERMINALS (dBm)	SUBSTITUTE ANTENNA GAIN (dBi)	CORRECT GENERATOR LEVEL (dBm)	POL (H/V)	(dBc)
3819.60	-65.7	12.4	-53.3	V	-71.6
5729.40	-66.4	11.7	-54.7	V	-74.2
7639.20	-70.0	11.5	-58.5	V	-78.6

NOTES:

Radiated Spurious Emission Measurements by Substitution Method according to ANSI/TIA/EIA-603-A-2001, Aug. 15, 2001:

The EUT was placed on a wooden turn table 3-meters from the receive antenna. The receive antenna height and turntable rotation was adjusted for the highest reading on the receive spectrum analyzer. For CDMA signals, a peak detector is used, with RBW=VBW=3MHz. For AMPS, GSM, and NADC TDMA signals, a peak detector is used, with RBW=VBW=1MHz.A half-wave dipole was substituted in place of the EUT. This dipole antenna was driven by a signal generator and the level of the signal generator was adjusted to obtain the same receive spectrum analyzer reading. This spurious level is recorded. For readings above 1GHz, the above procedure is repeated using horn antennas and the difference between the gain of the horn and an isotropic or dipole antenna are taken into consideration.

6.1 Test Data

6.2 FREQUENCY STABILITY (GSM1900)

OPERATING FREQUENCY: 1,880,000,073 Hz

CHANNEL: 661

REFERENCE VOLTAGE: 3.7 VDC

DEVIATION LIM IT: ± 0.00025 % or 2.5 ppm

Voltage (%)	Power (VDC)	Temp. (℃)	Frequency (Hz)	Deviation (%)	Deviation (ppm)
100	3.7	+20 (Ref)	1,880,000,073	0.000000	0.00000
100		-30	1,880,000,096	-0.000001	-0.01223
100		-20	1,880,000,127	-0.000003	-0.02872
100		-10	1,880,000,083	-0.000001	-0.00532
100		0	1,880,000,091	-0.000001	-0.00957
100		+10	1,880,000,143	-0.000004	-0.03723
100		+20	1,880,000,089	-0.000001	-0.00851
100		+30	1,880,000,143	-0.000004	-0.03723
100		+40	1,880,000,119	-0.000002	-0.02447
100		+50	1,880,000,153	-0.000004	-0.04255
100		+60	1,880,000,117	-0.000002	-0.02340
85	3.15	+20	1,880,000,143	-0.000004	-0.03723
115	4.26	+20	1,880,000,049	0.000001	0.01277
BATT.END POINT	2.81	+20	1,880,000,082	0.000000	-0.00479

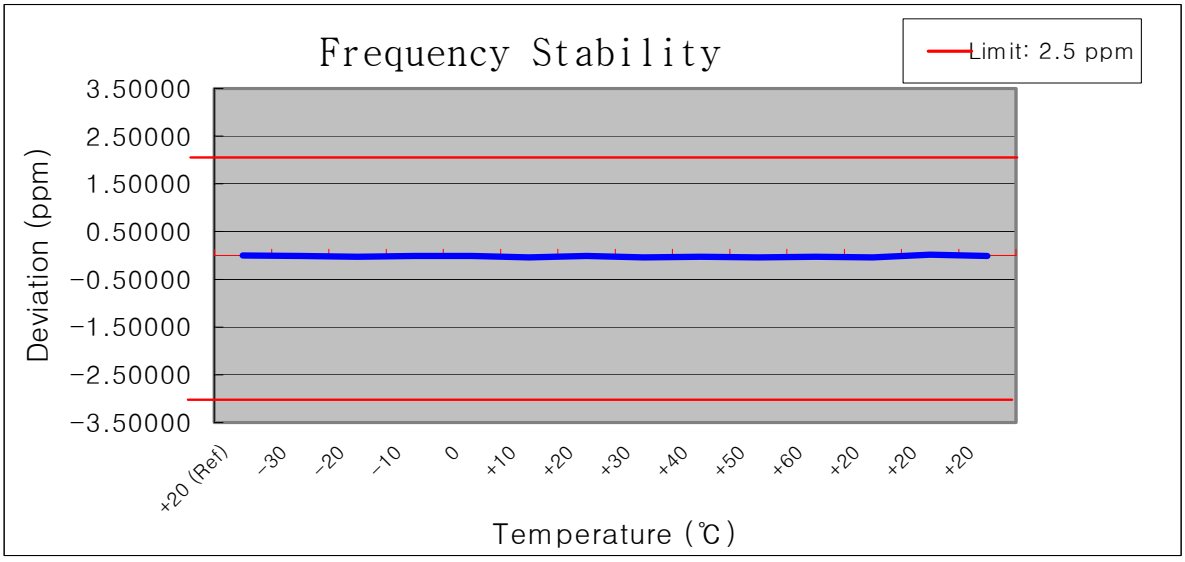

7.1 PLOT(S) OF EMISSION

(SEE ATTACHMENT D)

8.1 LIST OF TEST EQUIPMENT

Type / Model	Calib. Date	S/N
Spectrum Analyzer (20Hz~40GHz) R&S ESI40	Dec. 04	1088.7410
Spectrum Analyzer(100Hz~26.5GHz) R3273	April 04	J04821
Signal Generator HP8373ED (10MHz ~ 20GHz)	July 04	US8710152
Signal Generator MARCONI(10kHz ~ 2.7GHz)	Sep. 04	119331
Power Meter(A) HP 438A	July 04	2822A05909
Power Sensor(A) HP8481B	July 04	3318A08777
Power Meter(B) HP 438A	Nov. 04	2427A00963
Power Sensor(B) HP8481A	Oct. 04	2349A37617
Power Amp A0825-4343-R(800~2.5GHz) +43dB	Sep. 04	A00450
Network Analyzer HP-8753D (30kHz ~ 3GHz)	Sep. 04	3401J02111
Modulation Analyzer HP8901A	June 04	3438A05231
Dipole Antenna UHAP	June 04	557
Dipole Antenna UHAP	June 04	558
AMF-4D-001180-26-10P(0.1~18GHz)	Feb.05	671009
AMF-4D-001180-26-10P(18~26.5GHz)	Feb.05	667624
AMF-4D-001180-26-10P(26~40GHz)	Feb.05	671314
Audio Analyzer HP 8903A	Feb.05	2433A04322
Function Generator HP 8116A	Feb.05	3001A08285
Horn Antenna BBHA 9120D(1~18GHz)	June 04	1099
Horn Antenna BBHA 9120D(1~18GHz)	March 04	1201
Horn Antenna BBHA 9170(15~40GHz)	Feb.05	BBHA9170124
CDMA Mobile Station Test Set HP8924C	June 04	US39063847
PCS Interface HP83236B 1.7 ~ 2.0GHz	June 04	3711J04841
EMI Test Receiver Rohde & Schwarz ESH3	June 04	335.8017
EMI Test Receiver Rohde & Schwarz ESVP	Feb. 05	354.3000
EMI Test Receiver Rohde & Schwarz ESVS30	June 04	826006/013
Spectrum Analyzer HP 8591EM	July 04	3509A00155
LISN EMCO 3825/2	July 04	9706-1070
LISN Rohde & Schwarz ESH2-Z5	July 04	9706-1071
Amplifier Hewlett-Packard 8447E	March 04	2805A03141
Biconical Antenna BBA-9106(30~1000MHz)	June 04	D6901
Log-Periodic Antenna UHALP-9107(300~1000MHz)	June 04	91071107
Antenna VULB9160 (25MHz~1800MHz)	June 04	91071107
Antenna Position Tower HD240	N.A	3241
Turn Table EMCO 1060-06	N.A	1253A
AC Power Source PACIFIC Magnetic Module	N.A	45321
AC Power Source PACIFIC 360AMX	N.A	22B87

9.1 SAMPLE CALCULATIONS

A. ERP Sample Calculation

Freq. Tuned (MHz)	LEVEL(1) (dBm)	POL (H/V)	ERP (W)	ERP(2) (dBm)	BATTERY
824.70	-29.73	H	0.346	25.393	Standard

1) The EUT mounted on a wooden tripod is 0.8 meter above test site ground level.
2) During the test , the turn table is rotated and the antenna height is also varied from 1 to 4 meters until the maximum signal is found.
3) Record the field strength meter's level.(**LEVEL**)
4) Replace the EUT with dipole antenna that is connected to a calibrated signal generator.
5) Increase the signal generator output till the field strength meter's level is equal to the item(3).
6) The signal generator output level with cable loss is the rating of effective radiated power(**ERP**).
(Cable loss means the factor between Signal Generator and Transmitting Antenna.)

For more details, please refer to the test set-up procedure.

B. Emission Designator

Emission Designator = 300KGXW
GSM BW = 300 KHz
G = Phase Modulation
X = Cases not otherwise covered
W = Combination (Audio/Data)
Emission Designator = 300KGXW

10.1 CONCLUSION

The data collected shows that the Dual- Band GSM Phone. **FCC ID: RJAINNO-P10** complies with all the requirements of Parts 2 and 24 of the FCC rules.

ATTACHMENT D – TEST PLOTS

■ GSM1900 MODE (512 CH.) Conducted Spurious

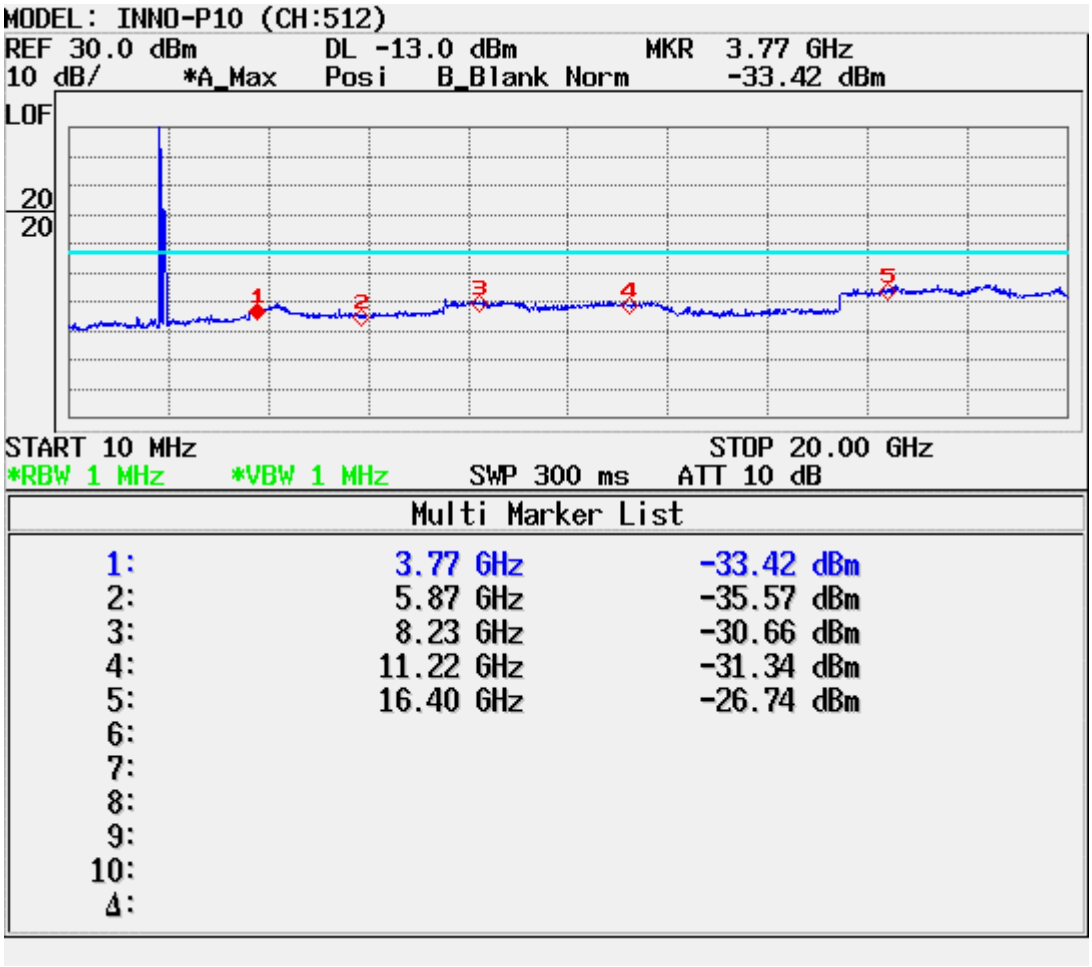

■ GSM1900 MODE (661 CH.) Conducted Spurious

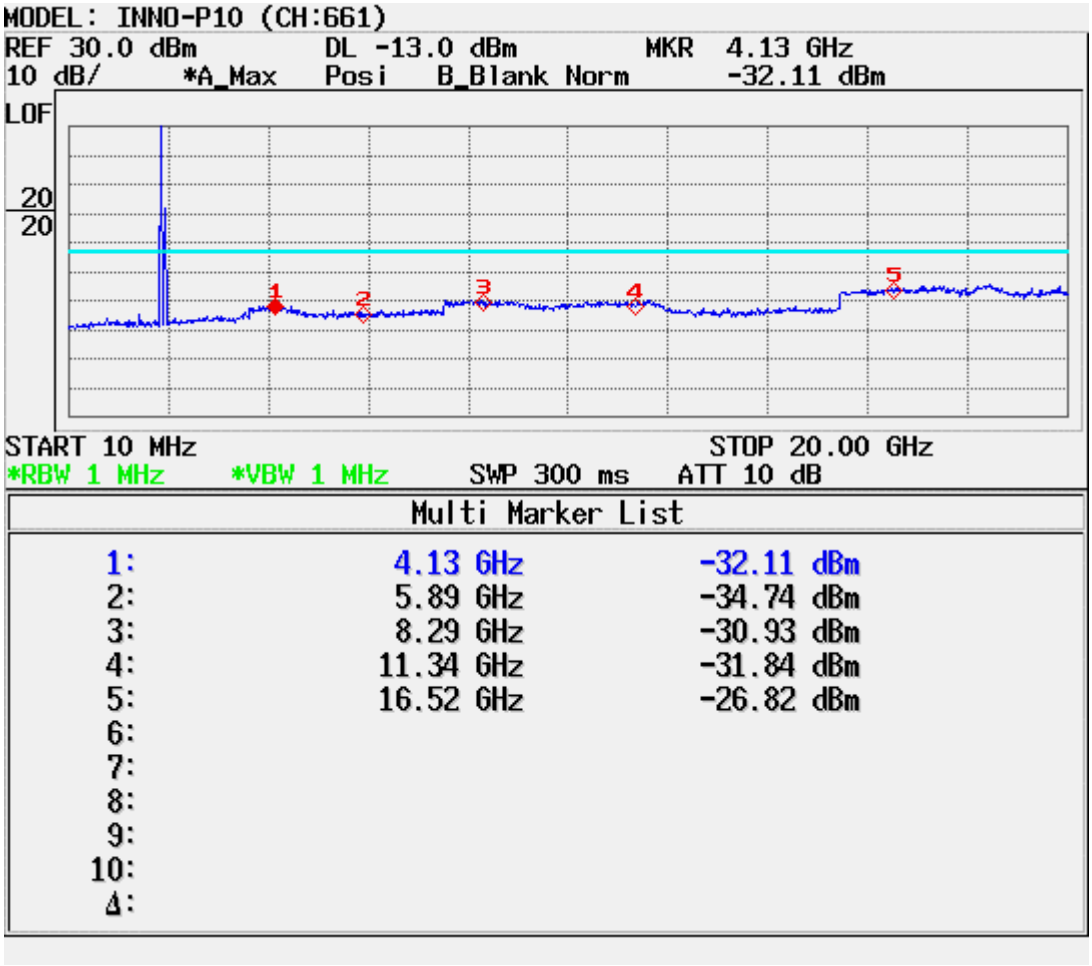

■ GSM1900 MODE (810 CH.) Conducted Spurious

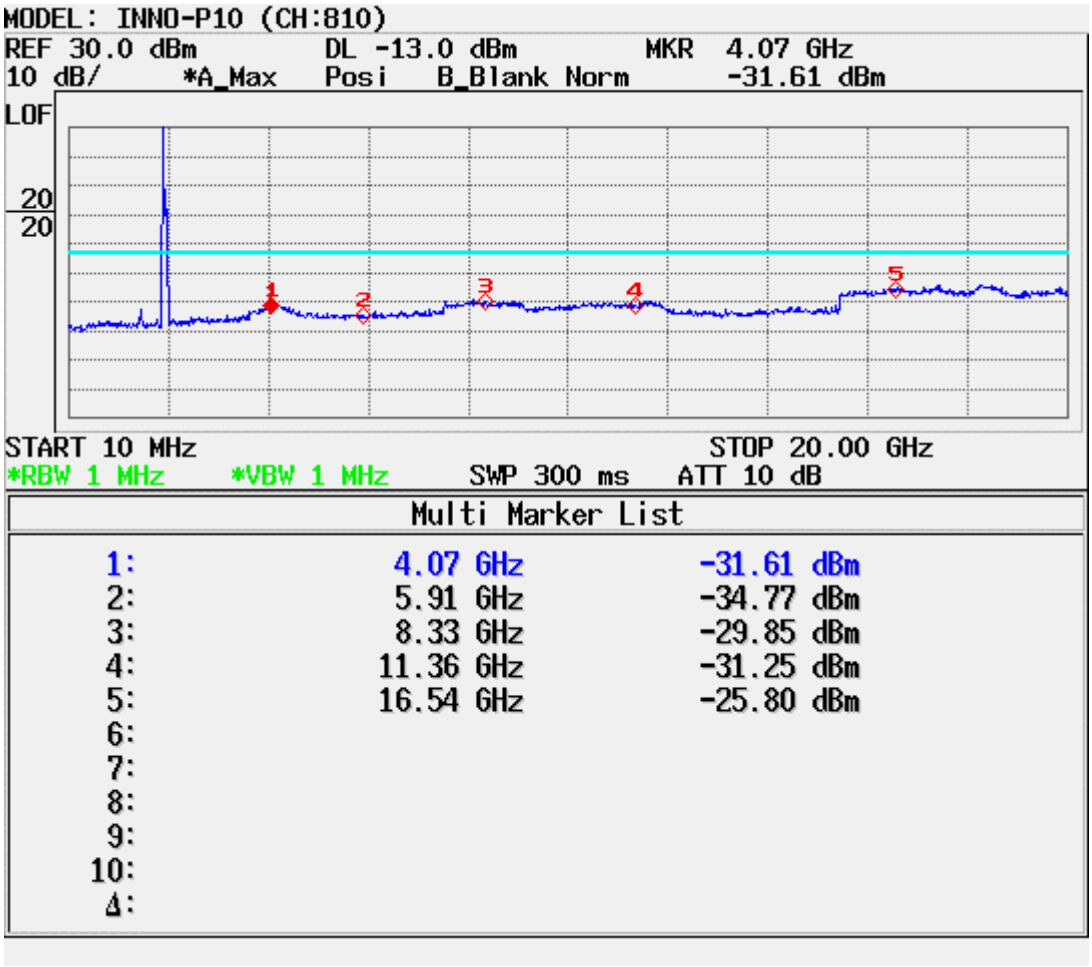

■ Occupied Bandwidth -26dBc BW (KHz) (GSM1900 512 CH)

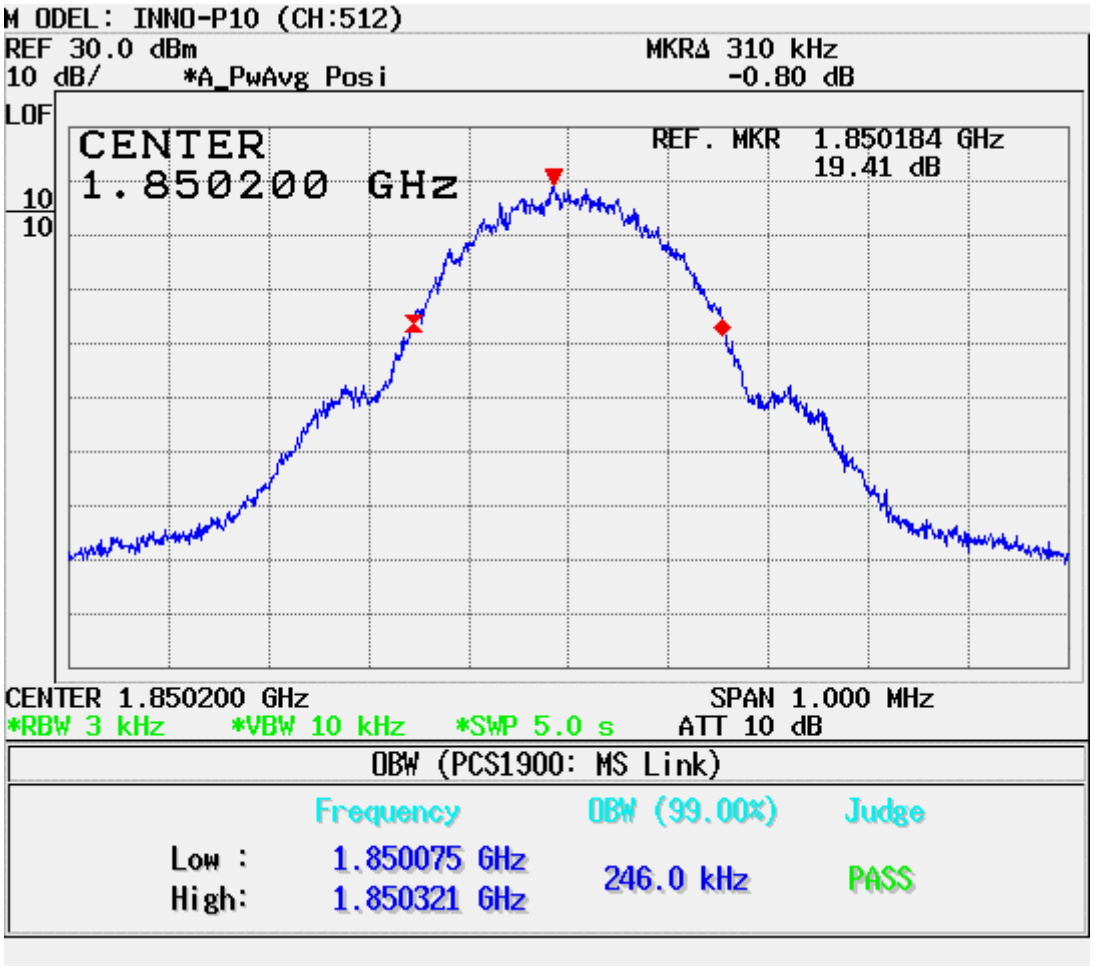

■ Occupied Bandwidth -26dBc BW (KHz) (GSM1900 661 CH)

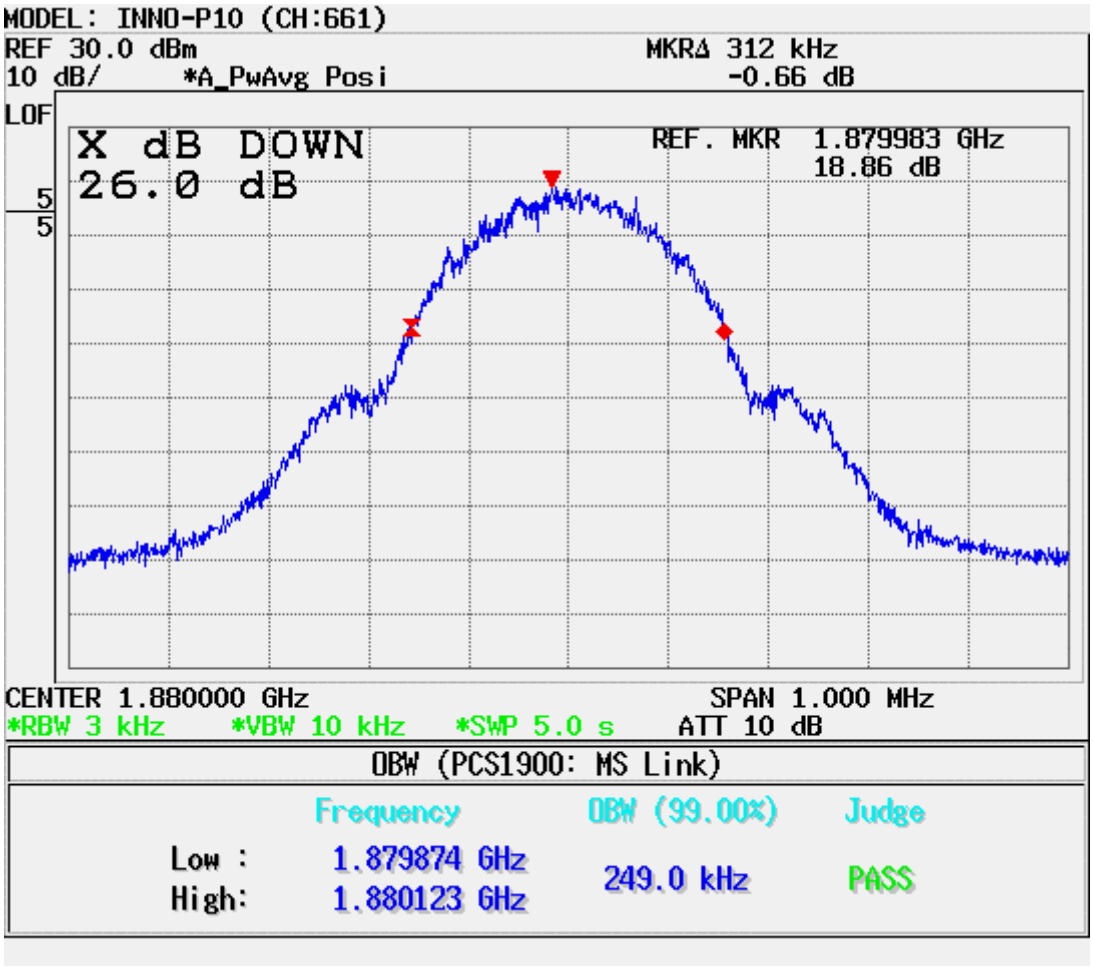

■ Occupied Bandwidth -26dBc BW (KHz) (GSM1900 810 CH)

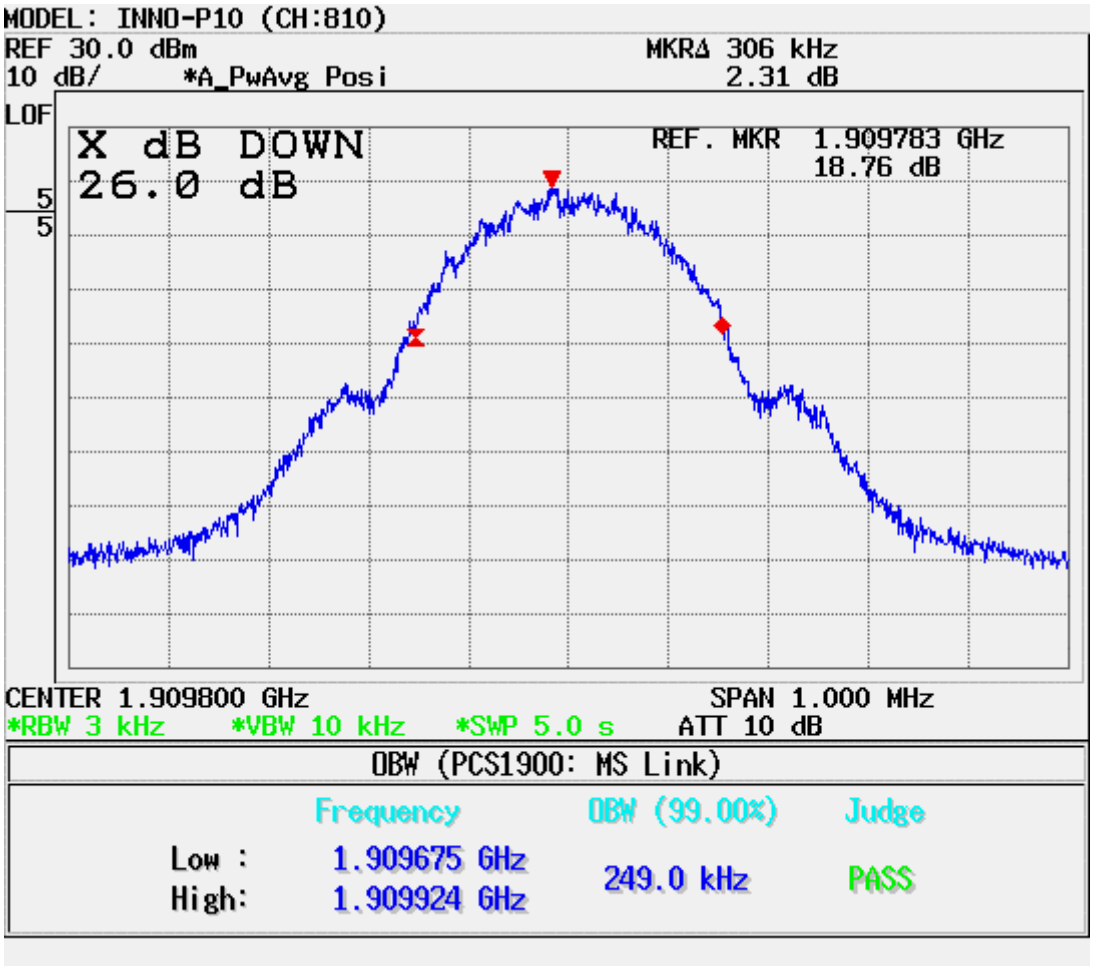

■ GSM Block Edge GSM1900 (512 CH.)

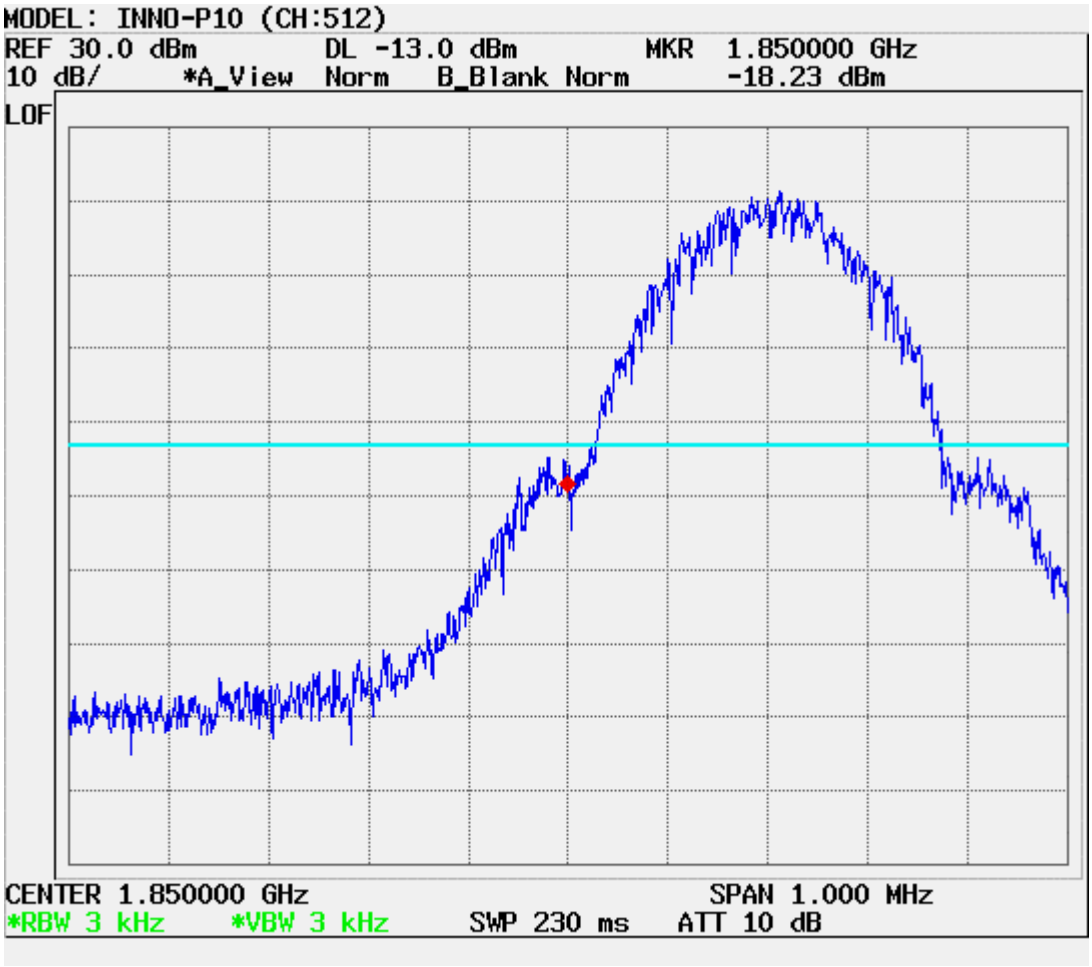

■ GSM Block Edge GSM1900 (810 CH.)

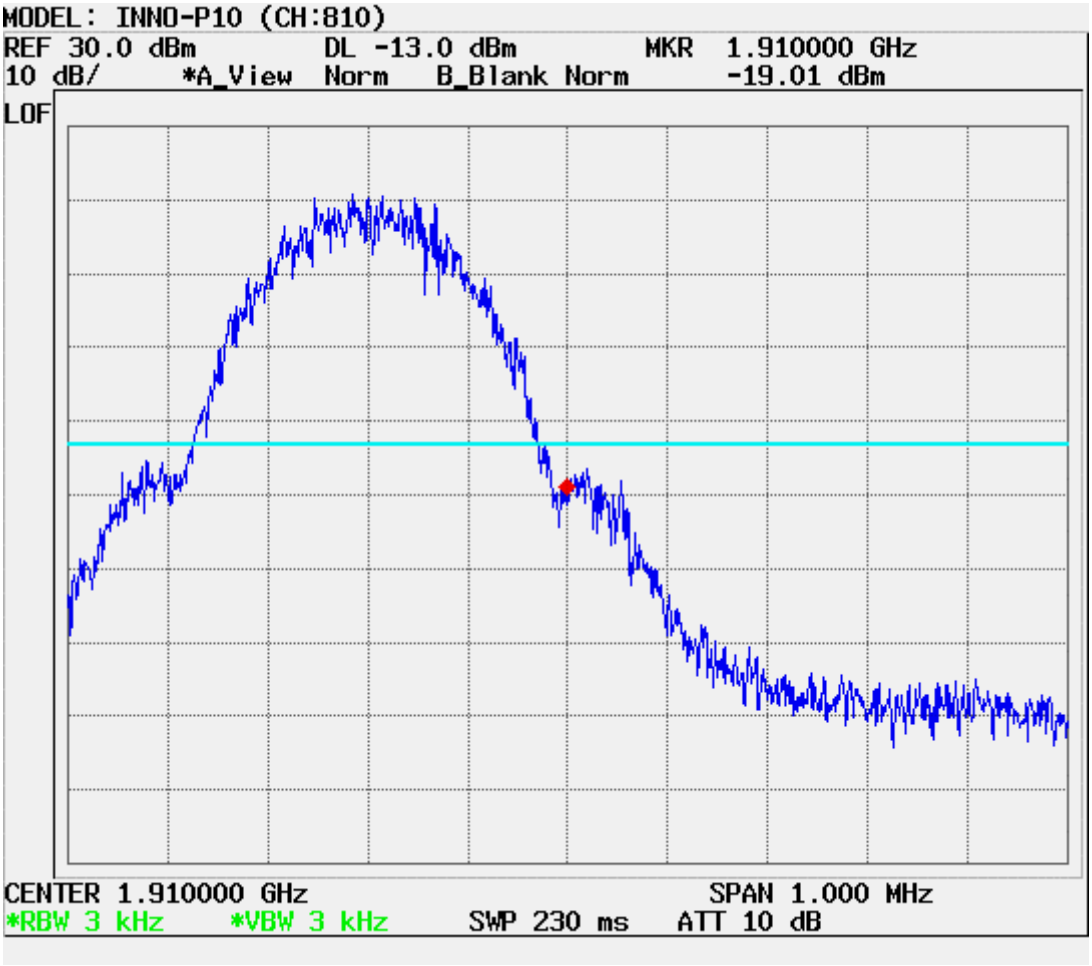

■ Power output conducted (GSM1900 512 CH)

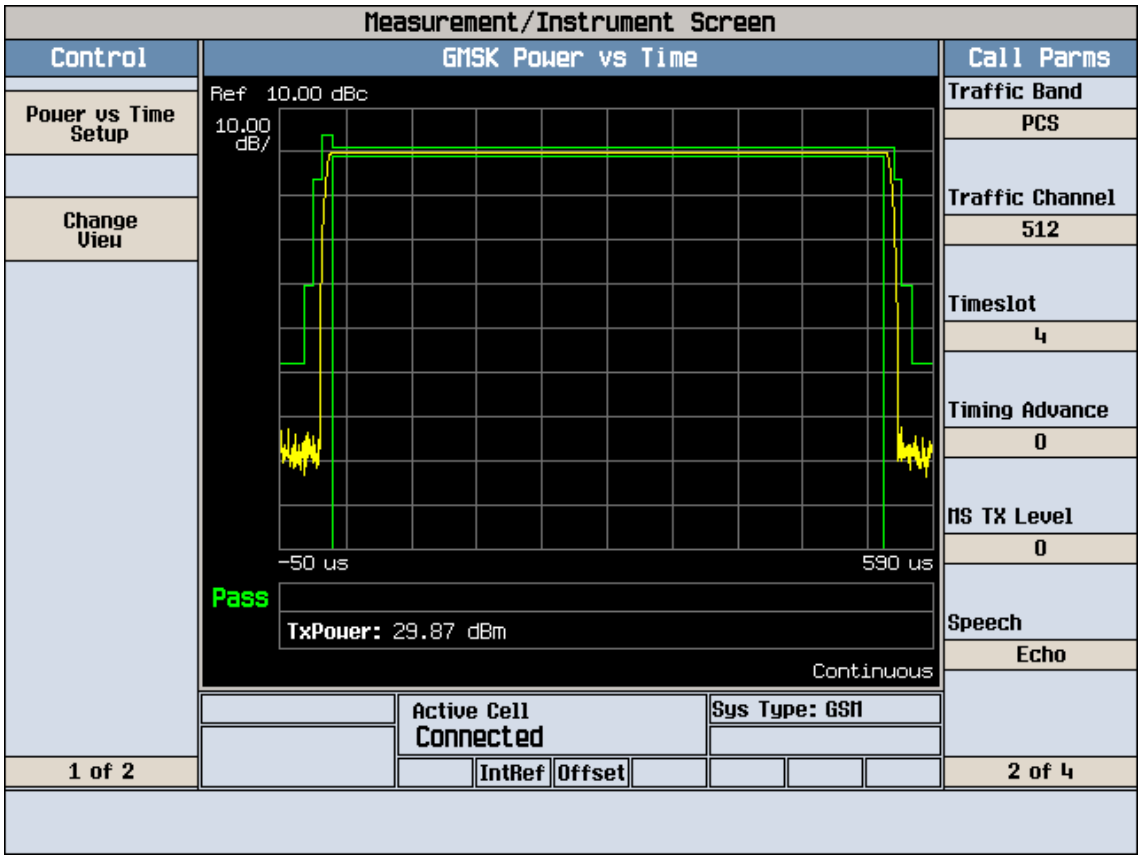

■ Power output conducted (GSM1900 661 CH)

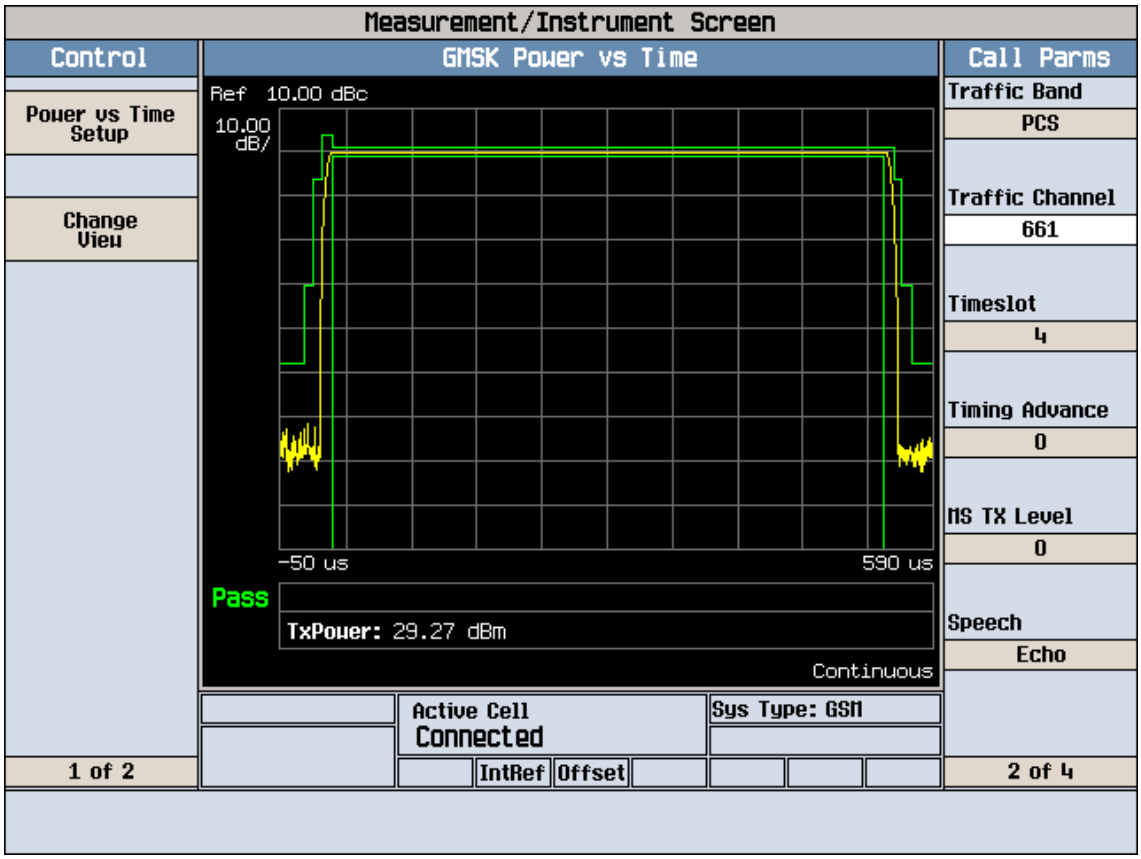

■ Power output conducted (GSM1900 810 CH)

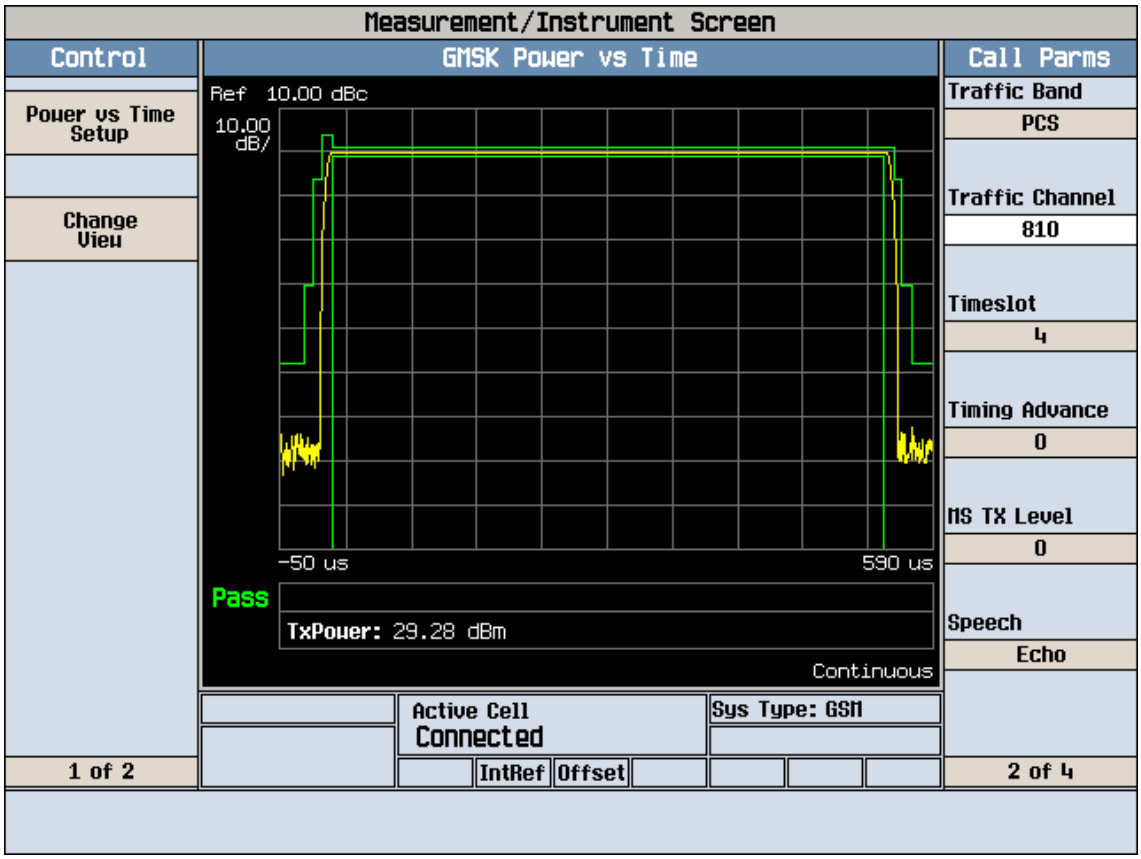

■ Modulation & Switching Graph (GSM1900 512 CH)

■ Modulation & Switching Graph (GSM1900 661 CH)

■ Modulation & Switching Graph (GSM1900 810 CH)