Appendix B

Measurement Plots

Date/Time: 11/18/03 08:19:06

Test Laboratory: ELECTRONIC TECHNOLOGY SYSTEMS DR. GENZ GMBH
File Name: Dipol Valid.1900 h_250mW_18.11.2003.da4

Dipol Valid.1900 h_250mW_18.11.2003

DUT: Dipole 1900 MHz; Type: D1900V2; Serial: 5d025
Program: Dipol Valid 1900

Communication System: CW; Frequency: 1900 MHz;Duty Cycle: 1:1
Medium: Head 1900 MHz (σ = 1.41529 mho/m, ε_r = 39.8679, ρ = 1000 kg/m^3)
Phantom section: Flat Section

DASY4 Configuration:

- Probe: ET3DV6 - SN1711; ConvF(5.3, 5.3, 5.3); Calibrated: 11/29/2002
- Sensor-Surface: 4mm (Mechanical And Optical Surface Detection)
- Electronics: DAE3 Sn522; Calibrated: 9/11/2002
- Phantom: SAM 12; Type: TP-1217; Serial: QD000P40CA
- Measurement SW: DASY4, V4.1 Build 47; Postprocessing SW: SEMCAD, V1.6 Build 115

Dipol 1900 (250mW)/Area Scan (81x81x1): Measurement grid: dx=10mm, dy=10mm
Reference Value = 96.4 V/m
Power Drift = -0.03 dB
Maximum value of SAR = 11.9 mW/g

Dipol 1900 (250mW)/Zoom Scan (7x7x7)/Cube 0: Measurement grid: dx=5mm, dy=5mm, dz=5mm
Peak SAR (extrapolated) = 19.1 W/kg
SAR(1 g) = 10.6 mW/g; SAR(10 g) = 5.4 mW/g
Reference Value = 96.4 V/m
Power Drift = -0.03 dB
Maximum value of SAR = 11.9 mW/g

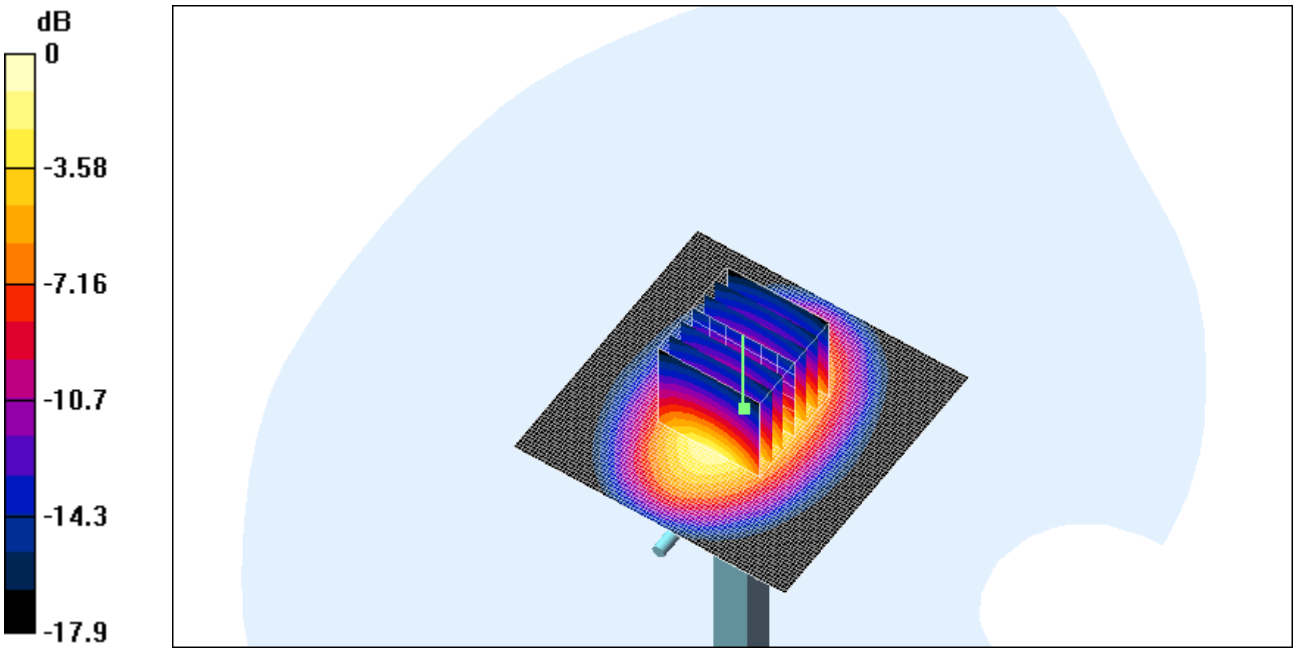

0 dB = 11.9mW/g

Date/Time: 11/19/03 09:51:34

Test Laboratory: ELECTRONIC TECHNOLOGY SYSTEMS DR. GENZ GMBH
File Name: Dipol Valid.1900 h_250mW_19.11.2003.da4

Dipol Valid.1900 h_250mW_19.11.2003

DUT: Dipole 1900 MHz; Type: D1900V2; Serial: 5d025
Program: Dipol Valid 1900

Communication System: CW; Frequency: 1900 MHz;Duty Cycle: 1:1
Medium: Head 1900 MHz (σ = 1.41529 mho/m, ε_r = 39.8679, ρ = 1000 kg/m^3)
Phantom section: Flat Section

DASY4 Configuration:

- Probe: ET3DV6 - SN1711; ConvF(5.3, 5.3, 5.3); Calibrated: 11/29/2002
- Sensor-Surface: 4mm (Mechanical And Optical Surface Detection)
- Electronics: DAE3 Sn522; Calibrated: 9/11/2002
- Phantom: SAM 12; Type: TP-1217; Serial: QD000P40CA
- Measurement SW: DASY4, V4.1 Build 47; Postprocessing SW: SEMCAD, V1.6 Build 115

Dipol 1900 (250mW)/Area Scan (81x81x1): Measurement grid: dx=10mm, dy=10mm
Reference Value = 96.5 V/m
Power Drift = -0.09 dB
Maximum value of SAR = 11.6 mW/g

Dipol 1900 (250mW)/Zoom Scan (7x7x7)/Cube 0: Measurement grid: dx=5mm, dy=5mm, dz=5mm
Peak SAR (extrapolated) = 17.9 W/kg
SAR(1 g) = 10.2 mW/g; SAR(10 g) = 5.25 mW/g
Reference Value = 96.5 V/m
Power Drift = -0.09 dB
Maximum value of SAR = 11.3 mW/g

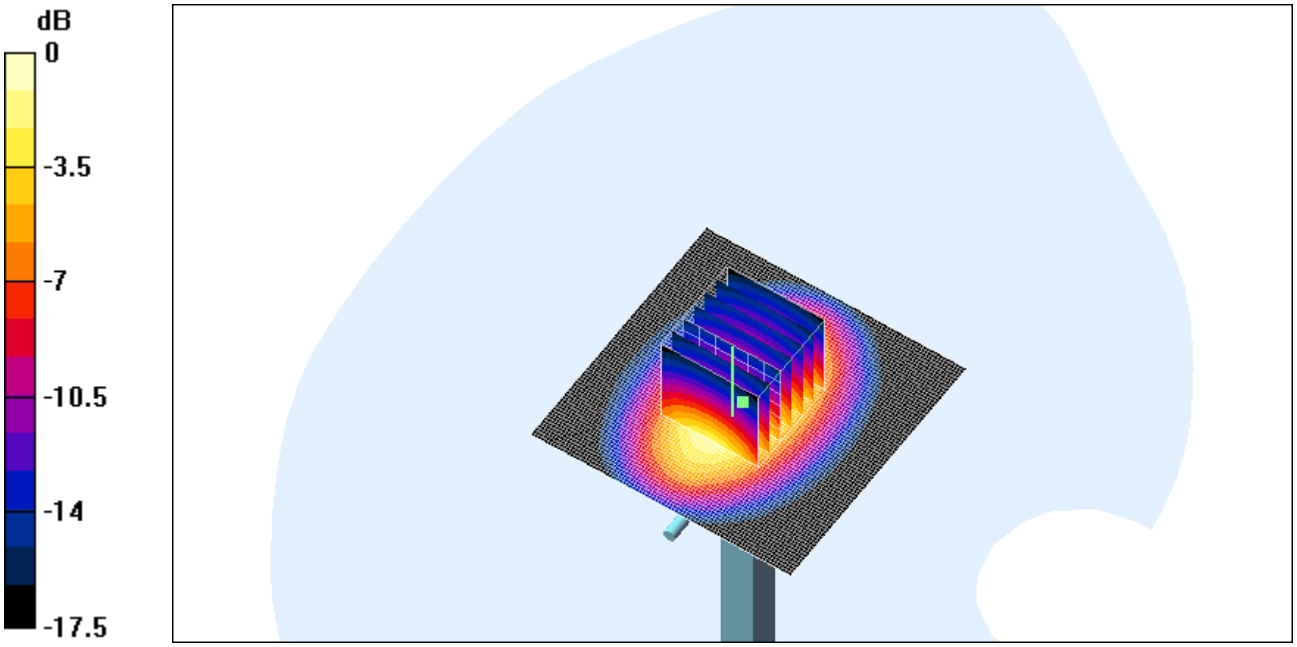

0 dB = 11.3mW/g

Date/Time: 11/25/03 07:06:31

Test Laboratory: ELECTRONIC TECHNOLOGY SYSTEMS DR. GENZ GMBH
File Name: Dipol Valid. 900 (m) 250mW_25.11.2003.da4

Dipol Valid. 900 (m) 250mW_25.11.2003

DUT: Dipole 900 MHz; Type: D900V2; Serial: 164
Program: Dipol Valid. 900 Muscle

Communication System: CW; Frequency: 900 MHz;Duty Cycle: 1:1
Medium: Muscle 900 MHz (σ = 1.03749 mho/m, ε_r = 54.4094, ρ = 1000 kg/m^3)
Phantom section: Flat Section

DASY4 Configuration:

- Probe: ET3DV6 - SN1711; ConvF(6.2, 6.2, 6.2); Calibrated: 11/29/2002
- Sensor-Surface: 4mm (Mechanical And Optical Surface Detection)
- Electronics: DAE3 Sn522; Calibrated: 9/11/2002
- Phantom: SAM 12; Type: TP-1217; Serial: QD000P40CA
- Measurement SW: DASY4, V4.1 Build 47; Postprocessing SW: SEMCAD, V1.6 Build 115

_ (250 mW)/Area Scan (101x161x1): Measurement grid: dx=10mm, dy=10mm
Reference Value = 55.1 V/m
Power Drift = -0.02 dB
Maximum value of SAR = 2.84 mW/g

_ (250 mW)/Zoom Scan (7x7x7)/Cube 0: Measurement grid: dx=5mm, dy=5mm, dz=5mm
Peak SAR (extrapolated) = 3.68 W/kg
SAR(1 g) = 2.57 mW/g; SAR(10 g) = 1.66 mW/g
Reference Value = 55.1 V/m
Power Drift = -0.02 dB
Maximum value of SAR = 2.77 mW/g

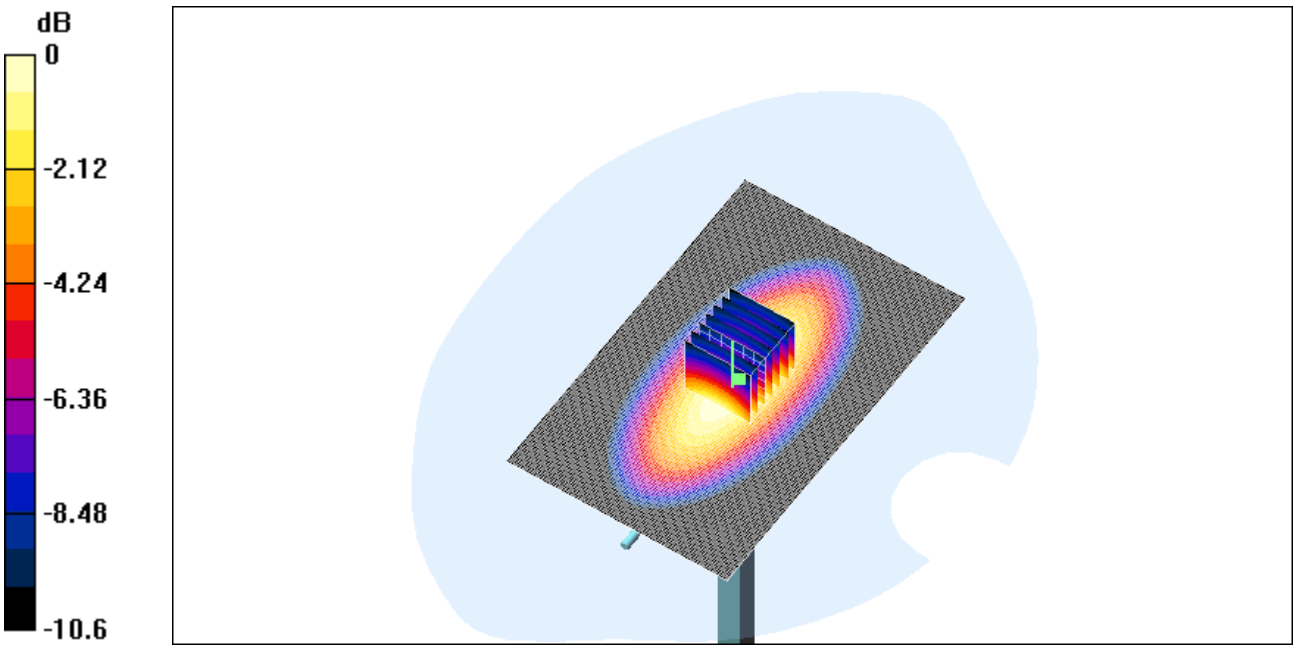

0 dB = 2.77mW/g

Date/Time: 11/22/03 08:16:31

Test Laboratory: ELECTRONIC TECHNOLOGY SYSTEMS DR. GENZ GMBH
File Name: Dipol Valid.900(h)_250mW_22.11.2003.da4

Dipol Valid.900(h)_250mW_22.11.2003

DUT: Dipole 900 MHz; Type: SA AAD 090 BA; Serial: 164
Program: Dipol Valid 900

Communication System: CW; Frequency: 900 MHz;Duty Cycle: 1:1
Medium: Head 900 MHz (σ = 0.936426 mho/m, ε_r = 41.4512, ρ = 1000 kg/m^3)
Phantom section: Flat Section

DASY4 Configuration:

- Probe: ET3DV6 - SN1711; ConvF(6.4, 6.4, 6.4); Calibrated: Probe not calibrated
- Sensor-Surface: 4mm (Mechanical And Optical Surface Detection)
- Electronics: DAE3 Sn522; Calibrated: 9/11/2002
- Phantom: SAM 12; Type: TP-1217; Serial: QD000P40CA
- Measurement SW: DASY4, V4.1 Build 47; Postprocessing SW: SEMCAD, V1.6 Build 115

Dipol 900 (250mW)/Area Scan (51x81x1): Measurement grid: dx=15mm, dy=15mm
Reference Value = 58.5 V/m
Power Drift = -0.01 dB
Maximum value of SAR = 2.99 mW/g

Dipol 900 (250mW)/Zoom Scan (7x7x7)/Cube 0: Measurement grid: dx=5mm, dy=5mm, dz=5mm
Peak SAR (extrapolated) = 4.02 W/kg
SAR(1 g) = 2.7 mW/g; SAR(10 g) = 1.72 mW/g
Reference Value = 58.5 V/m
Power Drift = -0.01 dB
Maximum value of SAR = 2.89 mW/g

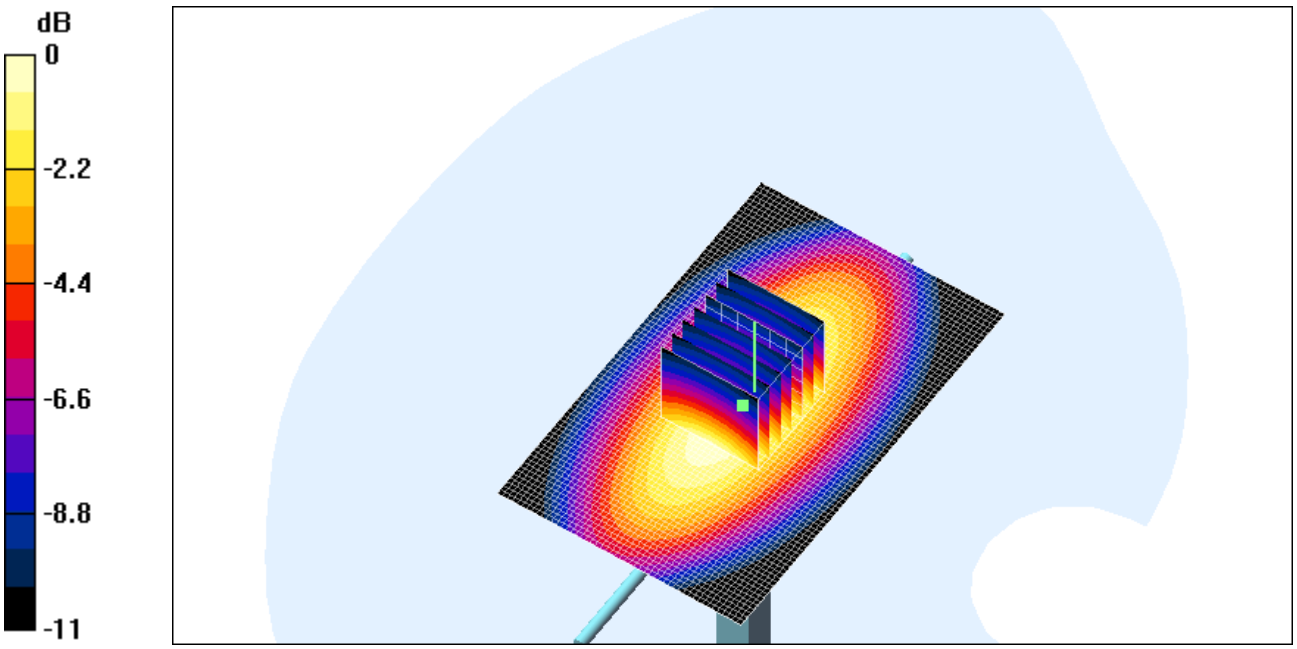

0 dB = 2.89mW/g

Date/Time: 11/24/03 06:47:34

Test Laboratory: ELECTRONIC TECHNOLOGY SYSTEMS DR. GENZ GMBH
File Name: Dipol Valid.900(h)_250mW_24.11.2003.da4

Dipol Valid.900(h)_250mW_24.11.2003

DUT: Dipole 900 MHz; Type: SA AAD 090 BA; Serial: 164
Program: Dipol Valid 900

Communication System: CW; Frequency: 900 MHz;Duty Cycle: 1:1
Medium: Head 900 MHz (σ = 0.936426 mho/m, ε_r = 41.4512, ρ = 1000 kg/m^3)
Phantom section: Flat Section

DASY4 Configuration:

- Probe: ET3DV6 - SN1711; ConvF(6.4, 6.4, 6.4); Calibrated: Probe not calibrated
- Sensor-Surface: 4mm (Mechanical And Optical Surface Detection)
- Electronics: DAE3 Sn522; Calibrated: 9/11/2002
- Phantom: SAM 12; Type: TP-1217; Serial: QD000P40CA
- Measurement SW: DASY4, V4.1 Build 47; Postprocessing SW: SEMCAD, V1.6 Build 115

Dipol 900 (250mW)/Area Scan (51x81x1): Measurement grid: dx=15mm, dy=15mm
Reference Value = 57.2 V/m
Power Drift = -0.02 dB
Maximum value of SAR = 2.83 mW/g

Dipol 900 (250mW)/Zoom Scan (7x7x7)/Cube 0: Measurement grid: dx=5mm, dy=5mm, dz=5mm
Peak SAR (extrapolated) = 3.74 W/kg
SAR(1 g) = 2.56 mW/g; SAR(10 g) = 1.64 mW/g
Reference Value = 57.2 V/m
Power Drift = -0.02 dB
Maximum value of SAR = 2.78 mW/g

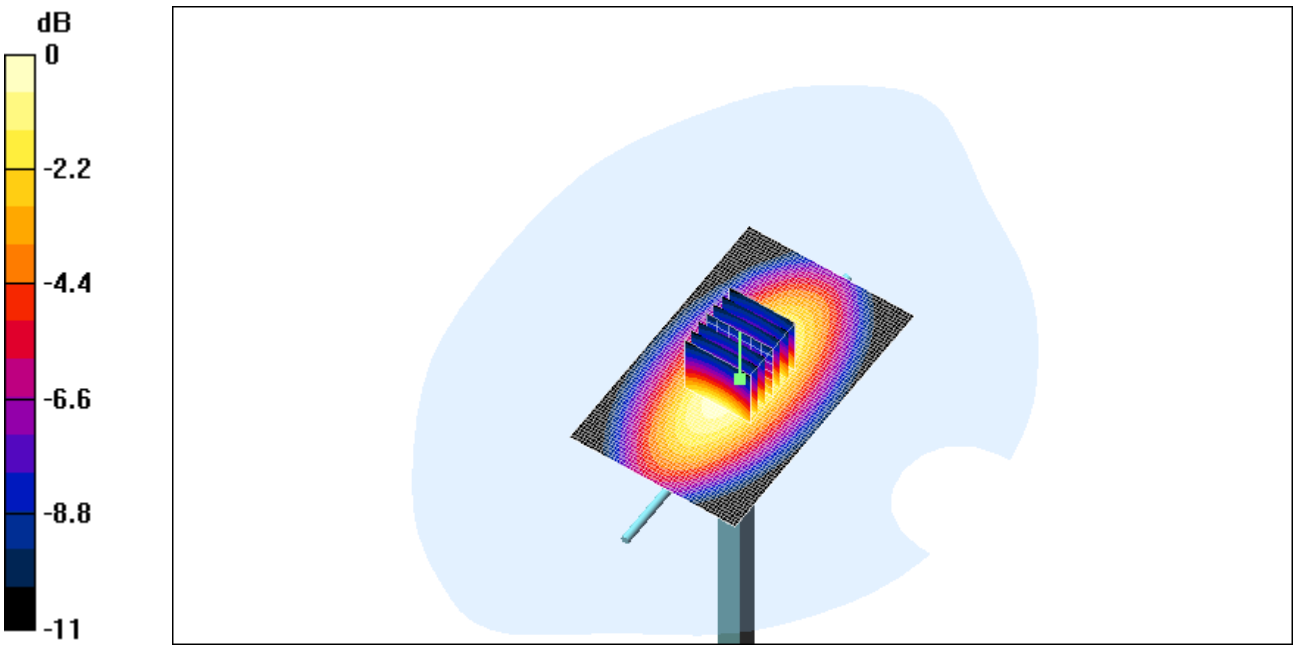

0 dB = 2.78mW/g

Date/Time: 11/14/03 10:21:37

Test Laboratory: ELECTRONIC TECHNOLOGY SYSTEMS DR. GENZ GMBH
File Name: Dipol Valid.1900(m)_14.11.03.da4

Dipol Valid.1900(m)_14.11.03

DUT: Dipole 1900 MHz; Type: D1900V2; Serial: 5d025
Program: Dipol Valid 1900

Communication System: CW; Frequency: 1900 MHz;Duty Cycle: 1:1
Medium: Muscle 1900 MHz (σ = 1.58102 mho/m, ε_r = 51.8712, ρ = 1000 kg/m^3)
Phantom section: Flat Section

DASY4 Configuration:

- Probe: ET3DV6 - SN1711; ConvF(5, 5, 5); Calibrated: 11/29/2002
- Sensor-Surface: 4mm (Mechanical And Optical Surface Detection)
- Electronics: DAE3 Sn522; Calibrated: 9/11/2002
- Phantom: SAM 12; Type: TP-1217; Serial: QD000P40CA
- Measurement SW: DASY4, V4.1 Build 47; Postprocessing SW: SEMCAD, V1.6 Build 115

Dipol 1900 (250mW)/Area Scan (71x101x1): Measurement grid: dx=10mm, dy=10mm
Reference Value = 97 V/m
Power Drift = -0.01 dB
Maximum value of SAR = 12.9 mW/g

Dipol 1900 (250mW)/Zoom Scan (7x7x7)/Cube 0: Measurement grid: dx=5mm, dy=5mm, dz=5mm
Peak SAR (extrapolated) = 19.4 W/kg
SAR(1 g) = 10.7 mW/g; SAR(10 g) = 5.54 mW/g
Reference Value = 97 V/m
Power Drift = -0.01 dB
Maximum value of SAR = 12.7 mW/g

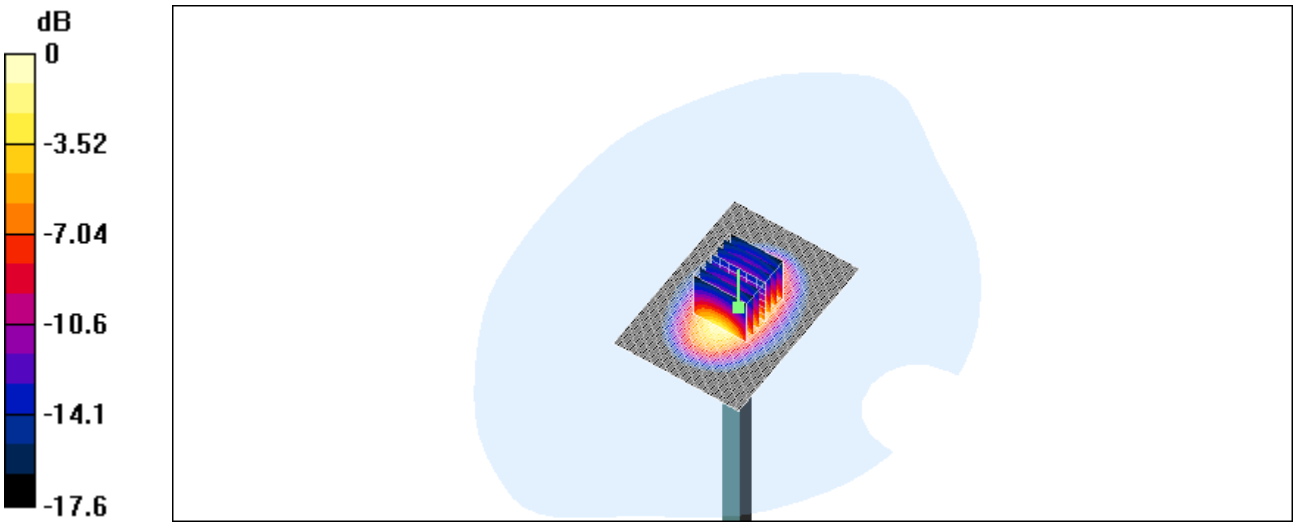

0 dB = 12.7mW/g

Date/Time: 11/20/03 08:58:36

Test Laboratory: ELECTRONIC TECHNOLOGY SYSTEMS DR. GENZ GMBH
File Name: Dipol Valid.1800 (m)_250mW.da4

Dipol Valid.1800 (m)_250mW

DUT: Dipole 1800 MHz (D1800V2); Type: SA AAD 180 BA; Serial: 2d046
Program: Dipol Valid 1800

Communication System: CW; Frequency: 1800 MHz;Duty Cycle: 1:1
Medium: Muscle 1800 MHz (σ = 1.56898 mho/m, ε_r = 52.2493, ρ = 1000 kg/m^3)
Phantom section: Flat Section

DASY4 Configuration:

- Probe: ET3DV6 - SN1711; ConvF(5, 5, 5); Calibrated: 11/29/2002
- Sensor-Surface: 4mm (Mechanical And Optical Surface Detection)
- Electronics: DAE3 Sn522; Calibrated: 9/11/2002
- Phantom: SAM 12; Type: TP-1217; Serial: QD000P40CA
- Measurement SW: DASY4, V4.1 Build 47; Postprocessing SW: SEMCAD, V1.6 Build 115

Dipol 1800 (250mW)/Area Scan (81x81x1): Measurement grid: dx=10mm, dy=10mm
Reference Value = 88.7 V/m
Power Drift = -0.02 dB
Maximum value of SAR = 11.1 mW/g

Dipol 1800 (250mW)/Zoom Scan (7x7x7)/Cube 0: Measurement grid: dx=5mm, dy=5mm, dz=5mm
Peak SAR (extrapolated) = 17.6 W/kg
SAR(1 g) = 9.85 mW/g; SAR(10 g) = 5.03 mW/g
Reference Value = 88.7 V/m
Power Drift = -0.02 dB
Maximum value of SAR = 11 mW/g

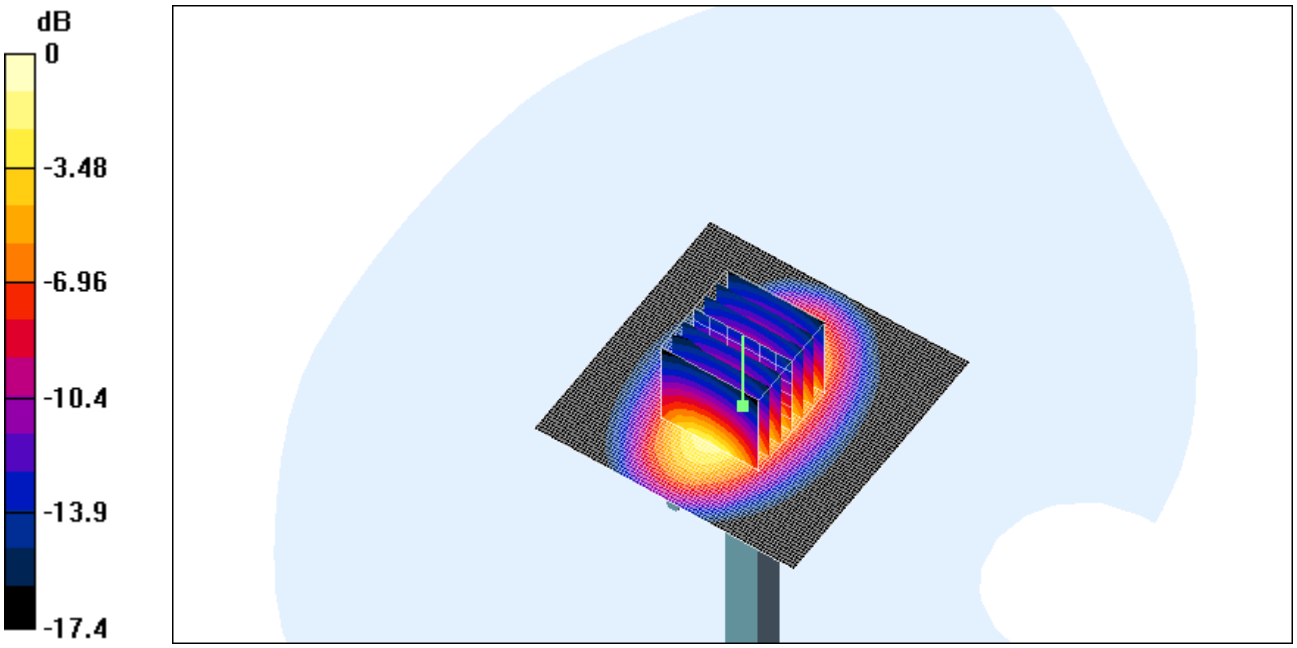

0 dB = 11mW/g

Date/Time: 11/21/03 08:56:47

Test Laboratory: ELECTRONIC TECHNOLOGY SYSTEMS DR. GENZ GMBH
File Name: Dipol Valid.1800 (h)_250mW_21.11.2003.da4

Dipol Valid.1800 (h)_250mW_21.11.2003

DUT: Dipole 1800 MHz (D1800V2); Type: SA AAD 180 BA; Serial: 2d046
Program: System Valid.

Communication System: CW; Frequency: 1800 MHz;Duty Cycle: 1:1
Medium: Head 1800 MHz (σ = 1.45479 mho/m, ε_r = 40.5879, ρ = 1000 kg/m^3)
Phantom section: Flat Section

DASY4 Configuration:

- Probe: ET3DV6 - SN1711; ConvF(5.3, 5.3, 5.3); Calibrated: 11/29/2002
- Sensor-Surface: 4mm (Mechanical And Optical Surface Detection)
- Electronics: DAE3 Sn522; Calibrated: 9/11/2002
- Phantom: SAM 12; Type: TP-1217; Serial: QD000P40CA
- Measurement SW: DASY4, V4.1 Build 47; Postprocessing SW: SEMCAD, V1.6 Build 115

Dipol Valid.1800(h) 250mW/Area Scan (81x81x1): Measurement grid: dx=10mm, dy=10mm
Reference Value = 90.6 V/m
Power Drift = -0.02 dB
Maximum value of SAR = 11.2 mW/g

Dipol Valid.1800(h) 250mW/Zoom Scan (7x7x7)/Cube 0: Measurement grid: dx=5mm, dy=5mm, dz=5mm
Peak SAR (extrapolated) = 18.2 W/kg
SAR(1 g) = 9.81 mW/g; SAR(10 g) = 4.97 mW/g
Reference Value = 90.6 V/m
Power Drift = -0.02 dB
Maximum value of SAR = 11 mW/g

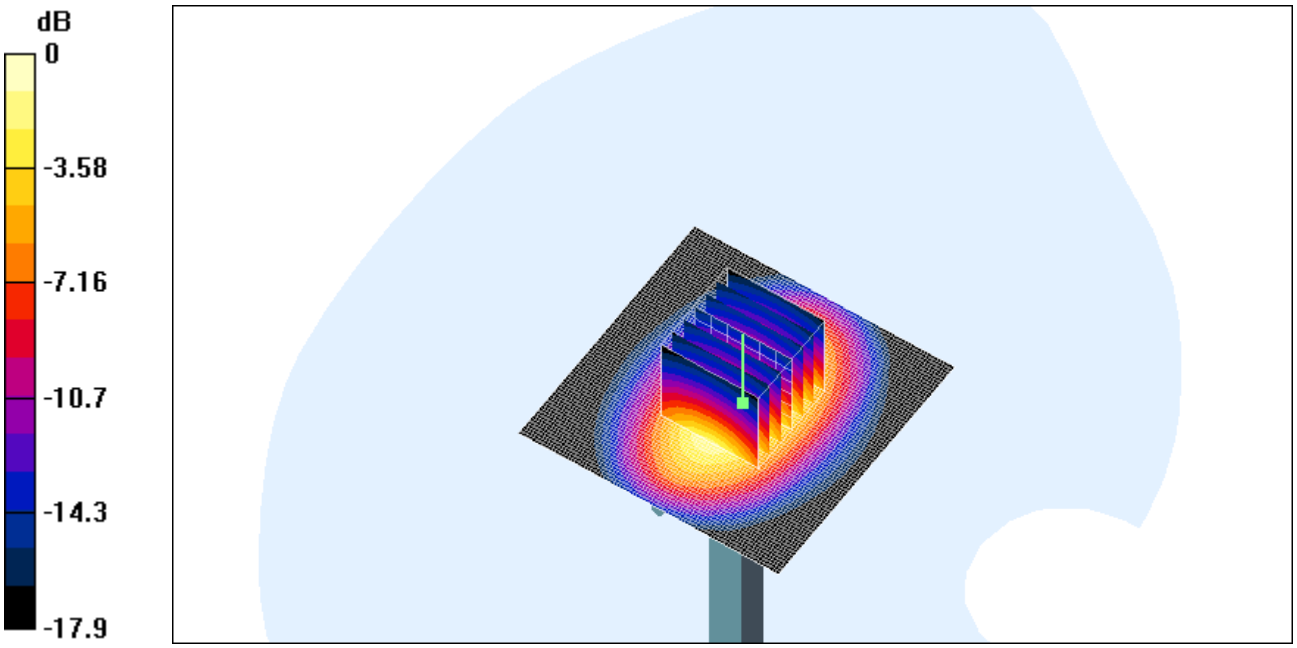

0 dB = 11mW/g

Date/Time: 11/22/03 08:51:38

Test Laboratory: ELECTRONIC TECHNOLOGY SYSTEMS DR. GENZ GMBH
File Name: Dipol Valid.900(h)_250mW_22.11.2003_sonden_test.da4

Dipol Valid.900(h)_250mW_22.11.2003_sonden_test

DUT: Dipole 900 MHz; Type: SA AAD 090 BA; Serial: 164
Program: Dipol Valid 900

Communication System: CW; Frequency: 900 MHz;Duty Cycle: 1:1
Medium: Head 900 MHz (σ = 0.936426 mho/m, ε_r = 41.4512, ρ = 1000 kg/m^3)
Phantom section: Flat Section

DASY4 Configuration:

- Probe: ET3DV6 - SN1711; ConvF(6.4, 6.4, 6.4); Calibrated: Probe not calibrated
- Sensor-Surface: 4mm (Mechanical And Optical Surface Detection)
- Electronics: DAE3 Sn522; Calibrated: 9/11/2002
- Phantom: SAM 12; Type: TP-1217; Serial: QD000P40CA
- Measurement SW: DASY4, V4.1 Build 47; Postprocessing SW: SEMCAD, V1.6 Build 115

Dipol 900 (250mW)/Area Scan (51x81x1): Measurement grid: dx=15mm, dy=15mm
Reference Value = 58.5 V/m
Power Drift = 0.05 dB
Maximum value of SAR = 2.99 mW/g

Dipol 900 (250mW)/Zoom Scan (7x7x7)/Cube 0: Measurement grid: dx=5mm, dy=5mm, dz=5mm
Peak SAR (extrapolated) = 4.11 W/kg
SAR(1 g) = 2.79 mW/g; SAR(10 g) = 1.78 mW/g
Reference Value = 58.5 V/m
Power Drift = 0.05 dB
Maximum value of SAR = 3 mW/g

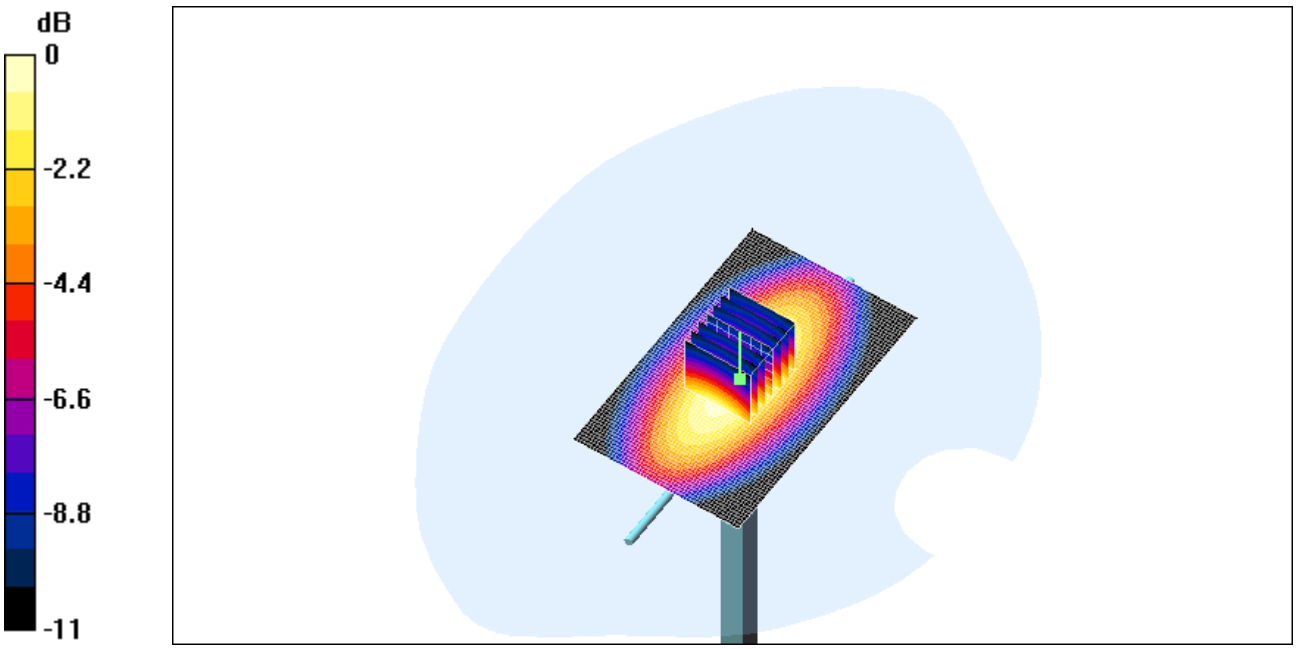

0 dB = 3mW/g

Date/Time: 11/22/03 13:28:57

Test Laboratory: ELECTRONIC TECHNOLOGY SYSTEMS DR. GENZ GMBH
File Name: 900_left_ch37_cheek.da4

900_left_ch37_cheek

DUT: E-GSM900/GSM1800/GSM1900 Triple Band GPRS Terminal Equipment; Type: -;
Serial: INNO 89
Program: EGSM 900

Communication System: EGSM 900; Frequency: 897.4 MHz;Duty Cycle: 1:8.3
Medium: Head 900 MHz (σ = 0.936426 mho/m, ε_r = 41.4512, ρ = 1000 kg/m^3)
Phantom section: Left Section

DASY4 Configuration:

- Probe: ET3DV6 - SN1711; ConvF(6.4, 6.4, 6.4); Calibrated: 11/29/2002
- Sensor-Surface: 4mm (Mechanical And Optical Surface Detection)
- Electronics: DAE3 Sn522; Calibrated: 9/11/2002
- Phantom: SAM 12; Type: TP-1217; Serial: QD000P40CA
- Measurement SW: DASY4, V4.1 Build 47; Postprocessing SW: SEMCAD, V1.6 Build 115

INNO89/Area Scan (91x151x1): Measurement grid: dx=10mm, dy=10mm
Reference Value = 14 V/m
Power Drift = 0.02 dB
Maximum value of SAR = 1.27 mW/g

INNO89/Zoom Scan (7x7x7)/Cube 0: Measurement grid: dx=5mm, dy=5mm, dz=5mm
Peak SAR (extrapolated) = 1.68 W/kg
SAR(1 g) = 1.17 mW/g; SAR(10 g) = 0.771 mW/g
Reference Value = 14 V/m
Power Drift = 0.02 dB
Maximum value of SAR = 1.24 mW/g

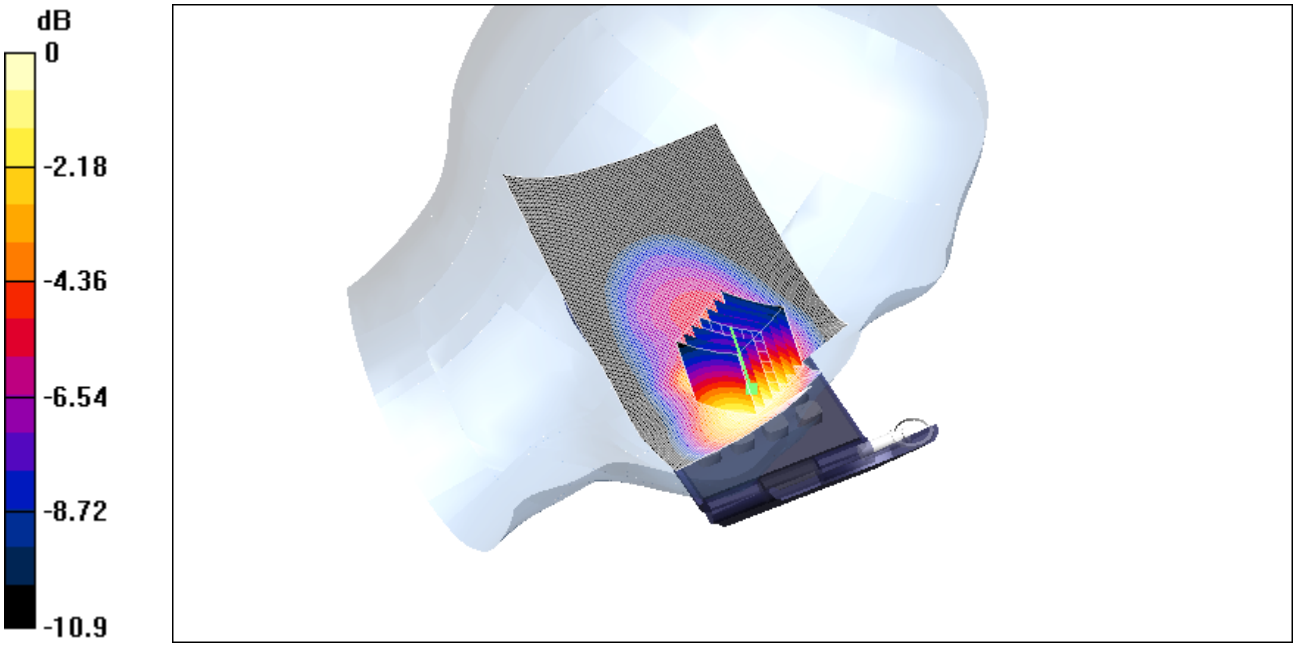

0 dB = 1.24mW/g

Date/Time: 11/24/03 07:41:00

Test Laboratory: ELECTRONIC TECHNOLOGY SYSTEMS DR. GENZ GMBH
File Name: 900_left_ch37_tilted.da4

900_left_ch37_tilted

DUT: E-GSM900/GSM1800/GSM1900 Triple Band GPRS Terminal Equipment; Type: -;
Serial: INNO 89
Program: EGSM 900

Communication System: EGSM 900; Frequency: 897.4 MHz;Duty Cycle: 1:8.3
Medium: Head 900 MHz (σ = 0.936426 mho/m, ε_r = 41.4512, ρ = 1000 kg/m^3)
Phantom section: Left Section

DASY4 Configuration:

- Probe: ET3DV6 - SN1711; ConvF(6.4, 6.4, 6.4); Calibrated: 11/29/2002
- Sensor-Surface: 4mm (Mechanical And Optical Surface Detection)
- Electronics: DAE3 Sn522; Calibrated: 9/11/2002
- Phantom: SAM 12; Type: TP-1217; Serial: QD000P40CA
- Measurement SW: DASY4, V4.1 Build 47; Postprocessing SW: SEMCAD, V1.6 Build 115

INNO89/Area Scan (91x151x1): Measurement grid: dx=10mm, dy=10mm
Reference Value = 18.7 V/m
Power Drift = 0.01 dB
Maximum value of SAR = 0.444 mW/g

INNO89/Zoom Scan (7x7x7)/Cube 0: Measurement grid: dx=5mm, dy=5mm, dz=5mm
Peak SAR (extrapolated) = 0.542 W/kg
SAR(1 g) = 0.425 mW/g; SAR(10 g) = 0.318 mW/g
Reference Value = 18.7 V/m
Power Drift = 0.01 dB
Maximum value of SAR = 0.445 mW/g

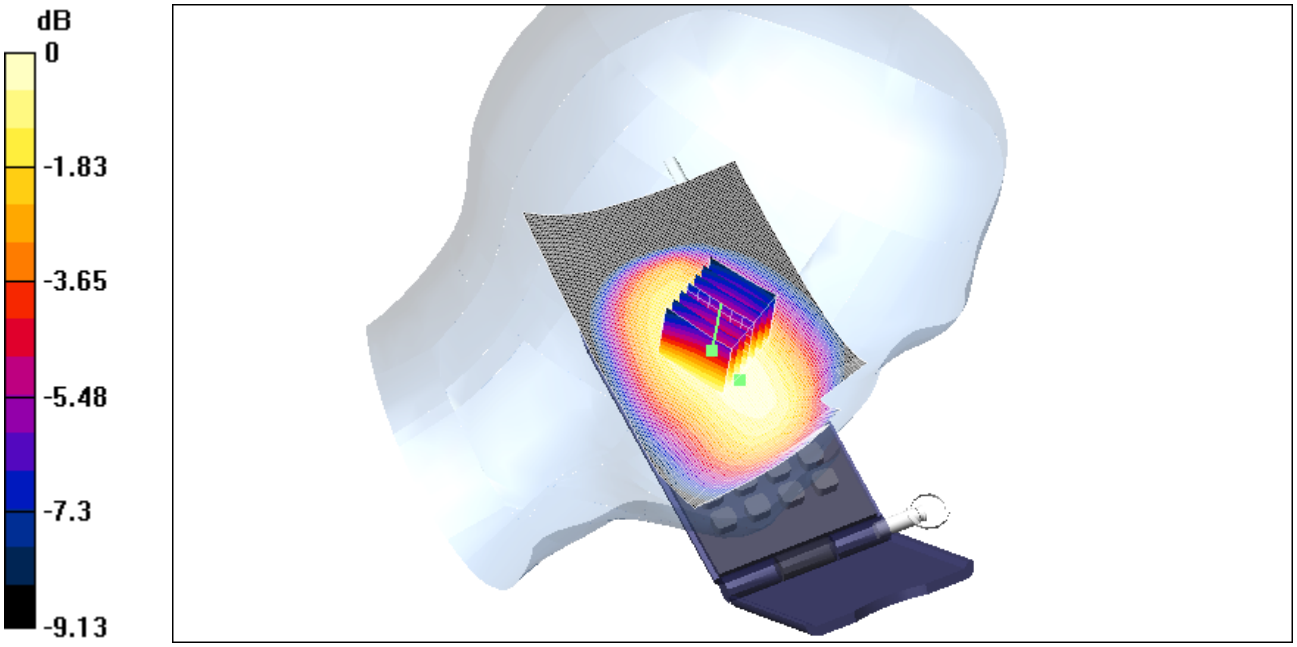

0 dB = 0.445mW/g

Date/Time: 11/22/03 09:45:53

Test Laboratory: ELECTRONIC TECHNOLOGY SYSTEMS DR. GENZ GMBH
File Name: 900_right_ch37_cheek.da4

900_right_ch37_cheek

DUT: E-GSM900/GSM1800/GSM1900 Triple Band GPRS Terminal Equipment; Type: -;
Serial: INNO 89
Program: EGSM 900

Communication System: EGSM 900; Frequency: 897.4 MHz;Duty Cycle: 1:8.3
Medium: Head 900 MHz (σ = 0.936426 mho/m, ε_r = 41.4512, ρ = 1000 kg/m^3)
Phantom section: Right Section

DASY4 Configuration:

- Probe: ET3DV6 - SN1711; ConvF(6.4, 6.4, 6.4); Calibrated: 11/29/2002
- Sensor-Surface: 4mm (Mechanical And Optical Surface Detection)
- Electronics: DAE3 Sn522; Calibrated: 9/11/2002
- Phantom: SAM 12; Type: TP-1217; Serial: QD000P40CA
- Measurement SW: DASY4, V4.1 Build 47; Postprocessing SW: SEMCAD, V1.6 Build 115

INNO89/Area Scan (91x151x1): Measurement grid: dx=10mm, dy=10mm
Reference Value = 14.6 V/m
Power Drift = -0.08 dB
Maximum value of SAR = 1.51 mW/g

INNO89/Zoom Scan (7x7x7)/Cube 0: Measurement grid: dx=5mm, dy=5mm, dz=5mm
Peak SAR (extrapolated) = 2 W/kg
SAR(1 g) = 1.35 mW/g; SAR(10 g) = 0.854 mW/g
Reference Value = 14.6 V/m
Power Drift = -0.08 dB
Maximum value of SAR = 1.45 mW/g

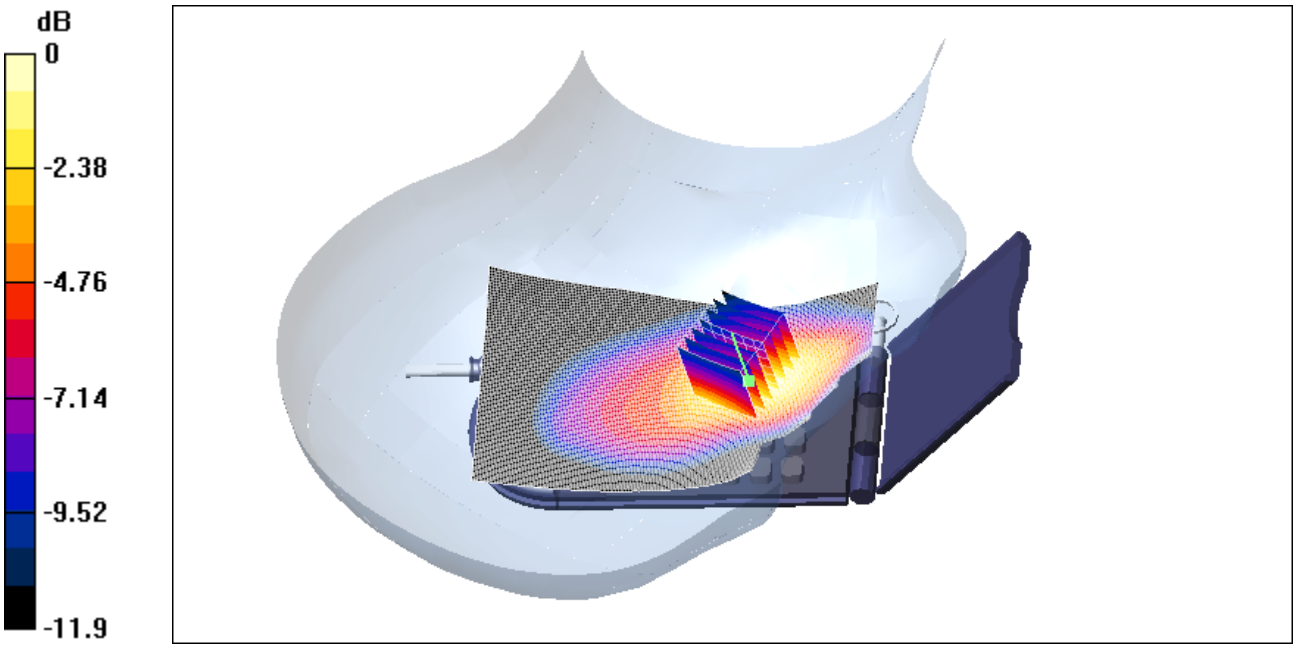

0 dB = 1.45mW/g

Date/Time: 11/22/03 11:55:26

Test Laboratory: ELECTRONIC TECHNOLOGY SYSTEMS DR. GENZ GMBH
File Name: 900_right_ch37_tilted.da4

900_right_ch37_tilted

DUT: E-GSM900/GSM1800/GSM1900 Triple Band GPRS Terminal Equipment; Type: -;
Serial: INNO 89
Program: EGSM 900

Communication System: EGSM 900; Frequency: 897.4 MHz;Duty Cycle: 1:8.3
Medium: Head 900 MHz (σ = 0.936426 mho/m, ε_r = 41.4512, ρ = 1000 kg/m^3)
Phantom section: Right Section

DASY4 Configuration:

- Probe: ET3DV6 - SN1711; ConvF(6.4, 6.4, 6.4); Calibrated: 11/29/2002
- Sensor-Surface: 4mm (Mechanical And Optical Surface Detection)
- Electronics: DAE3 Sn522; Calibrated: 9/11/2002
- Phantom: SAM 12; Type: TP-1217; Serial: QD000P40CA
- Measurement SW: DASY4, V4.1 Build 47; Postprocessing SW: SEMCAD, V1.6 Build 115

INNO89/Area Scan (91x151x1): Measurement grid: dx=10mm, dy=10mm
Reference Value = 18.3 V/m
Power Drift = -0.02 dB
Maximum value of SAR = 0.467 mW/g

INNO89/Zoom Scan (7x7x7)/Cube 0: Measurement grid: dx=5mm, dy=5mm, dz=5mm
Peak SAR (extrapolated) = 0.558 W/kg
SAR(1 g) = 0.441 mW/g; SAR(10 g) = 0.326 mW/g
Reference Value = 18.3 V/m
Power Drift = -0.02 dB
Maximum value of SAR = 0.465 mW/g

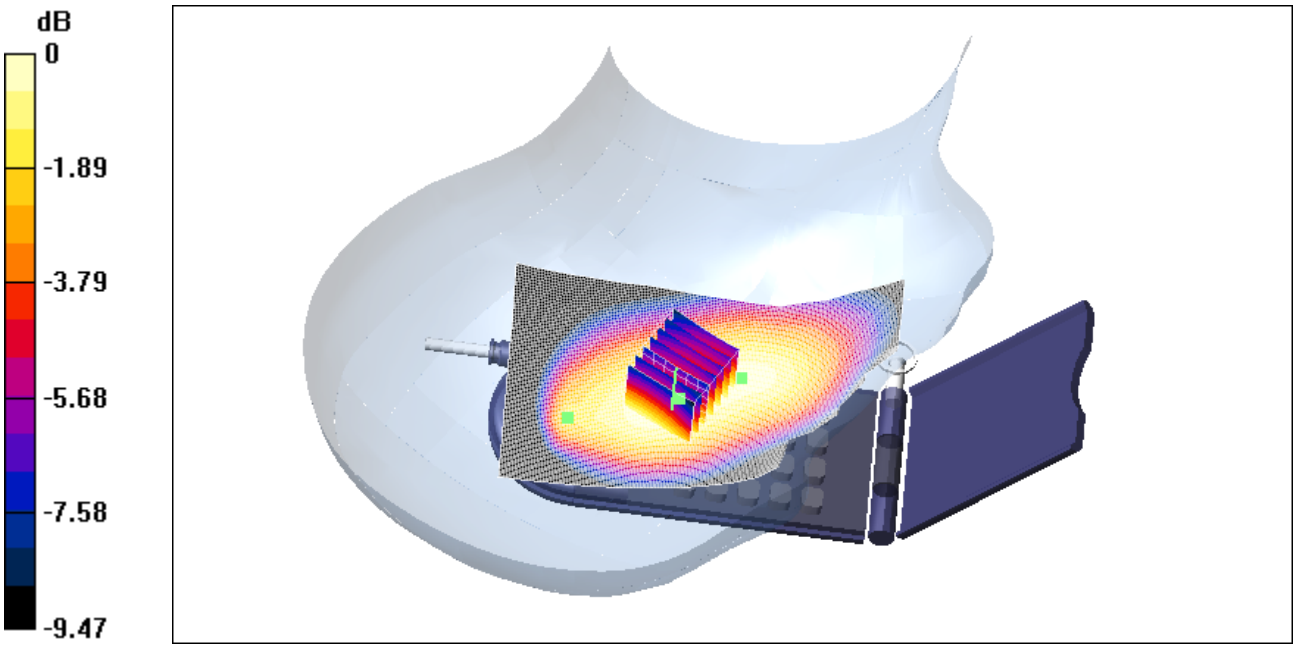

0 dB = 0.464mW/g

Date/Time: 11/22/03 14:38:16

Test Laboratory: ELECTRONIC TECHNOLOGY SYSTEMS DR. GENZ GMBH
File Name: 900_left_ch975_cheek.da4

900_left_ch975_cheek

DUT: E-GSM900/GSM1800/GSM1900 Triple Band GPRS Terminal Equipment; Type: -;
Serial: INNO 89
Program: EGSM 900

Communication System: EGSM 900; Frequency: 880.2 MHz;Duty Cycle: 1:8.3
Medium: Head 900 MHz (σ = 0.92802 mho/m, ε_r = 41.7428, ρ = 1000 kg/m^3)
Phantom section: Left Section

DASY4 Configuration:

- Probe: ET3DV6 - SN1711; ConvF(6.4, 6.4, 6.4); Calibrated: 11/29/2002
- Sensor-Surface: 4mm (Mechanical And Optical Surface Detection)
- Electronics: DAE3 Sn522; Calibrated: 9/11/2002
- Phantom: SAM 12; Type: TP-1217; Serial: QD000P40CA
- Measurement SW: DASY4, V4.1 Build 47; Postprocessing SW: SEMCAD, V1.6 Build 115

INNO89/Area Scan (91x141x1): Measurement grid: dx=10mm, dy=10mm
Reference Value = 13.4 V/m
Power Drift = -0.05 dB
Maximum value of SAR = 1.15 mW/g

INNO89/Zoom Scan (7x7x7)/Cube 0: Measurement grid: dx=5mm, dy=5mm, dz=5mm
Peak SAR (extrapolated) = 1.52 W/kg
SAR(1 g) = 1.07 mW/g; SAR(10 g) = 0.704 mW/g
Reference Value = 13.4 V/m
Power Drift = -0.05 dB
Maximum value of SAR = 1.14 mW/g

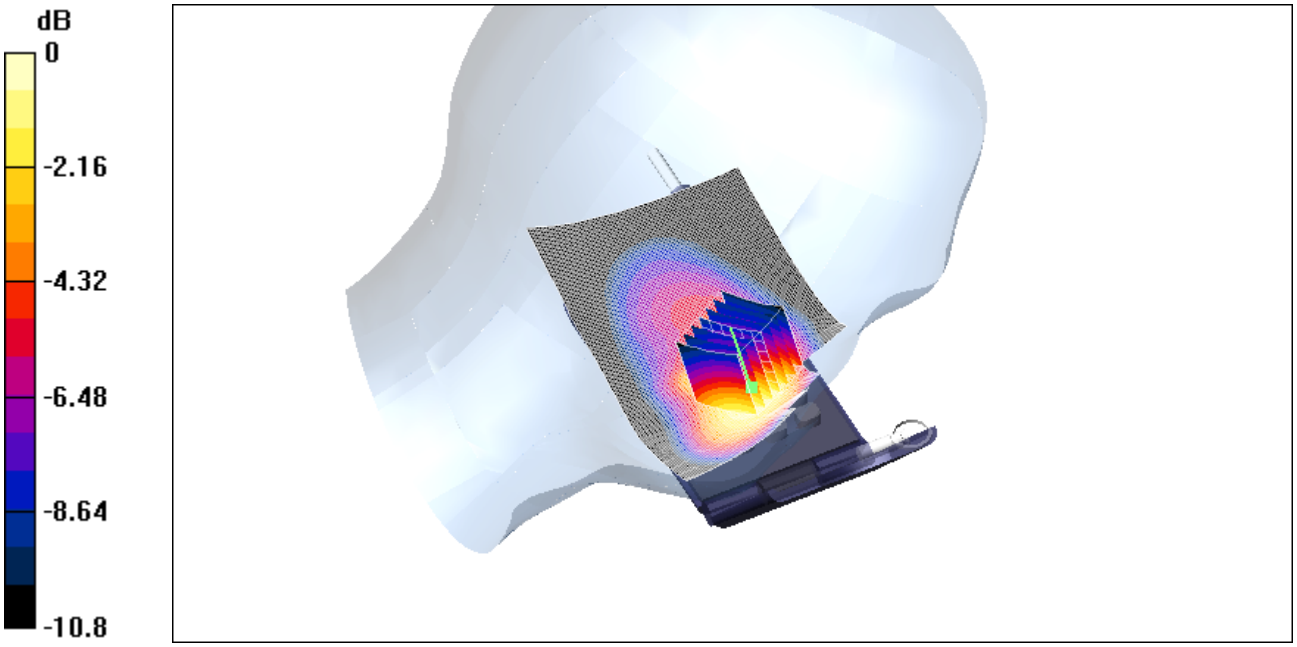

0 dB = 1.14mW/g

Date/Time: 11/22/03 10:29:35

Test Laboratory: ELECTRONIC TECHNOLOGY SYSTEMS DR. GENZ GMBH
File Name: 900_right_ch975_cheek.da4

900_right_ch975_cheek

DUT: E-GSM900/GSM1800/GSM1900 Triple Band GPRS Terminal Equipment; Type: -;
Serial: INNO 89
Program: EGSM 900

Communication System: EGSM 900; Frequency: 880.2 MHz;Duty Cycle: 1:8.3
Medium: Head 900 MHz (σ = 0.92802 mho/m, ε_r = 41.7428, ρ = 1000 kg/m^3)
Phantom section: Right Section

DASY4 Configuration:

- Probe: ET3DV6 - SN1711; ConvF(6.4, 6.4, 6.4); Calibrated: 11/29/2002
- Sensor-Surface: 4mm (Mechanical And Optical Surface Detection)
- Electronics: DAE3 Sn522; Calibrated: 9/11/2002
- Phantom: SAM 12; Type: TP-1217; Serial: QD000P40CA
- Measurement SW: DASY4, V4.1 Build 47; Postprocessing SW: SEMCAD, V1.6 Build 115

INNO89/Area Scan (91x151x1): Measurement grid: dx=10mm, dy=10mm
Reference Value = 13.7 V/m
Power Drift = -0.02 dB
Maximum value of SAR = 1.33 mW/g

INNO89/Zoom Scan (7x7x7)/Cube 0: Measurement grid: dx=5mm, dy=5mm, dz=5mm
Peak SAR (extrapolated) = 1.88 W/kg
SAR(1 g) = 1.23 mW/g; SAR(10 g) = 0.768 mW/g
Reference Value = 13.7 V/m
Power Drift = -0.02 dB
Maximum value of SAR = 1.31 mW/g

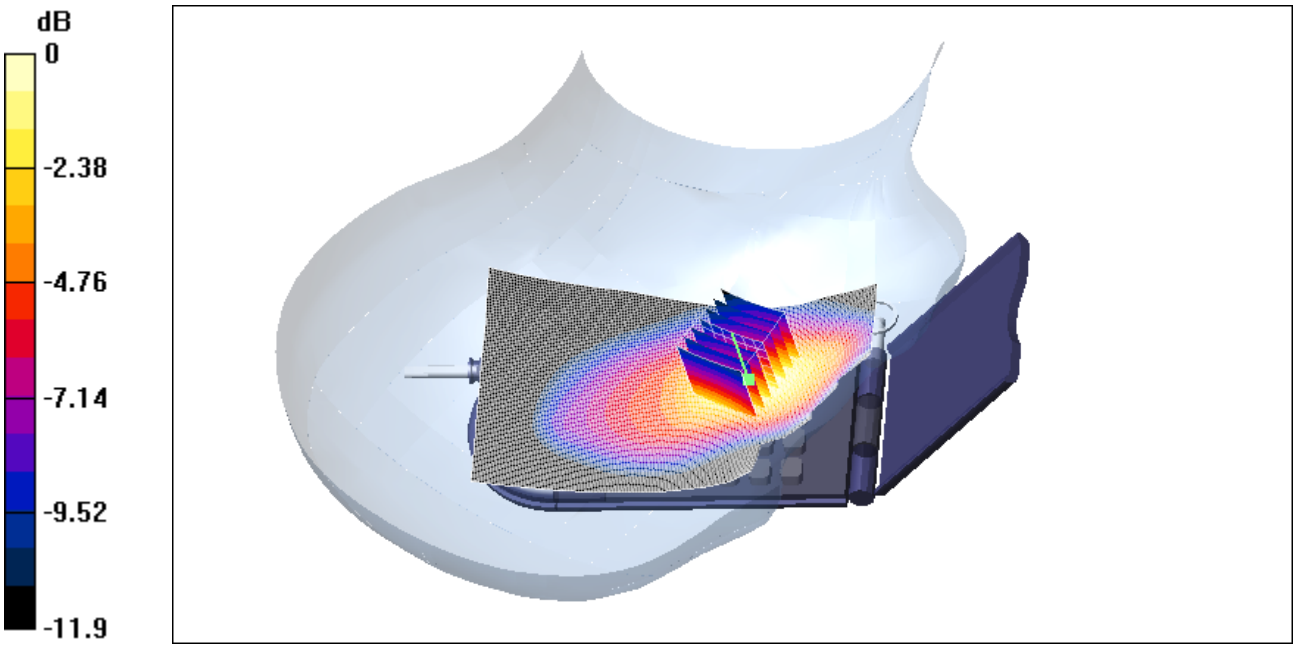

0 dB = 1.31mW/g

Date/Time: 11/22/03 14:04:11

Test Laboratory: ELECTRONIC TECHNOLOGY SYSTEMS DR. GENZ GMBH
File Name: 900_left_ch124_cheek.da4

900_left_ch124_cheek

DUT: E-GSM900/GSM1800/GSM1900 Triple Band GPRS Terminal Equipment; Type: -;
Serial: INNO 89
Program: EGSM 900

Communication System: EGSM 900; Frequency: 914.8 MHz;Duty Cycle: 1:8.3
Medium: Head 900 MHz (σ = 0.961851 mho/m, ε_r = 41.2463, ρ = 1000 kg/m^3)
Phantom section: Left Section

DASY4 Configuration:

- Probe: ET3DV6 - SN1711; ConvF(6.4, 6.4, 6.4); Calibrated: 11/29/2002
- Sensor-Surface: 4mm (Mechanical And Optical Surface Detection)
- Electronics: DAE3 Sn522; Calibrated: 9/11/2002
- Phantom: SAM 12; Type: TP-1217; Serial: QD000P40CA
- Measurement SW: DASY4, V4.1 Build 47; Postprocessing SW: SEMCAD, V1.6 Build 115

INNO89/Area Scan (91x141x1): Measurement grid: dx=10mm, dy=10mm
Reference Value = 15.1 V/m
Power Drift = -0.01 dB
Maximum value of SAR = 1.47 mW/g

INNO89/Zoom Scan (7x7x7)/Cube 0: Measurement grid: dx=5mm, dy=5mm, dz=5mm
Peak SAR (extrapolated) = 1.94 W/kg
SAR(1 g) = 1.35 mW/g; SAR(10 g) = 0.887 mW/g
Reference Value = 15.1 V/m
Power Drift = -0.01 dB
Maximum value of SAR = 1.43 mW/g

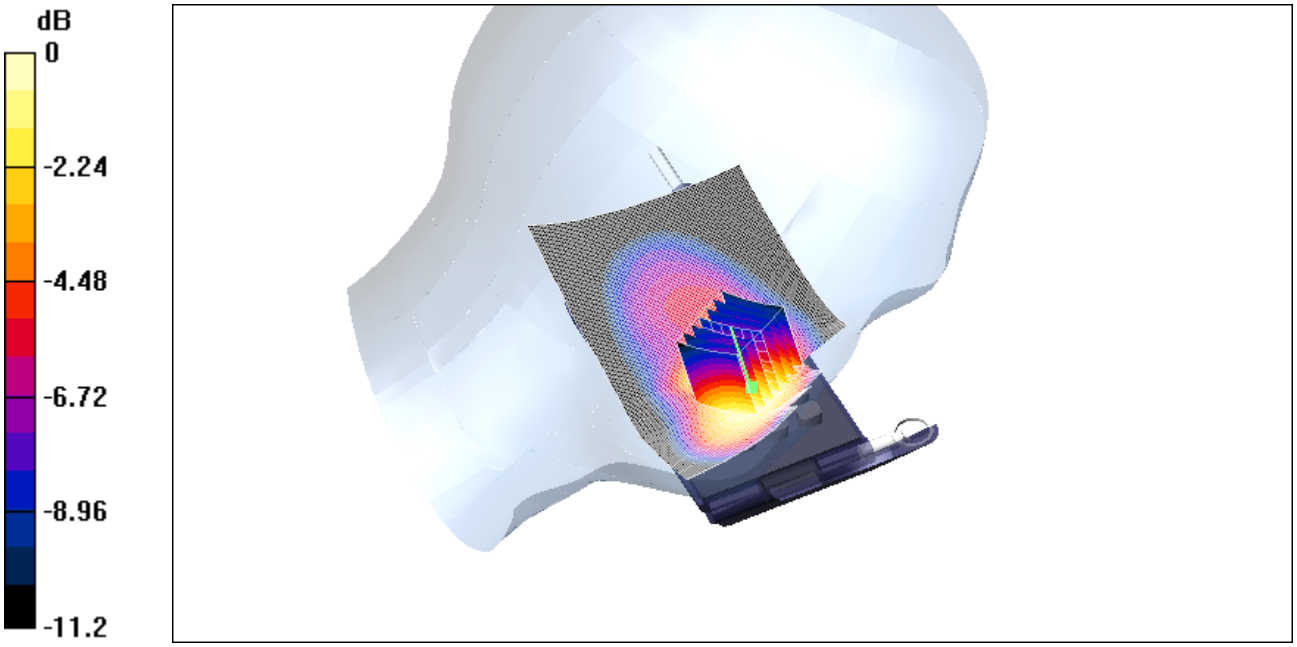

0 dB = 1.43mW/g

Date/Time: 11/22/03 11:07:03

Test Laboratory: ELECTRONIC TECHNOLOGY SYSTEMS DR. GENZ GMBH
File Name: 900_right_ch124_cheek.da4

900_right_ch124_cheek

DUT: E-GSM900/GSM1800/GSM1900 Triple Band GPRS Terminal Equipment; Type: -;
Serial: INNO 89
Program: EGSM 900

Communication System: EGSM 900; Frequency: 914.8 MHz;Duty Cycle: 1:8.3
Medium: Head 900 MHz (σ = 0.961851 mho/m, ε_r = 41.2463, ρ = 1000 kg/m^3)
Phantom section: Right Section

DASY4 Configuration:

- Probe: ET3DV6 - SN1711; ConvF(6.4, 6.4, 6.4); Calibrated: 11/29/2002
- Sensor-Surface: 4mm (Mechanical And Optical Surface Detection)
- Electronics: DAE3 Sn522; Calibrated: 9/11/2002
- Phantom: SAM 12; Type: TP-1217; Serial: QD000P40CA
- Measurement SW: DASY4, V4.1 Build 47; Postprocessing SW: SEMCAD, V1.6 Build 115

INNO89/Area Scan (91x151x1): Measurement grid: dx=10mm, dy=10mm
Reference Value = 15.6 V/m
Power Drift = -0.004 dB
Maximum value of SAR = 1.72 mW/g

INNO89/Zoom Scan (7x7x7)/Cube 0: Measurement grid: dx=5mm, dy=5mm, dz=5mm
Peak SAR (extrapolated) = 2.4 W/kg
SAR(1 g) = 1.58 mW/g; SAR(10 g) = 0.986 mW/g
Reference Value = 15.6 V/m
Power Drift = -0.004 dB
Maximum value of SAR = 1.71 mW/g

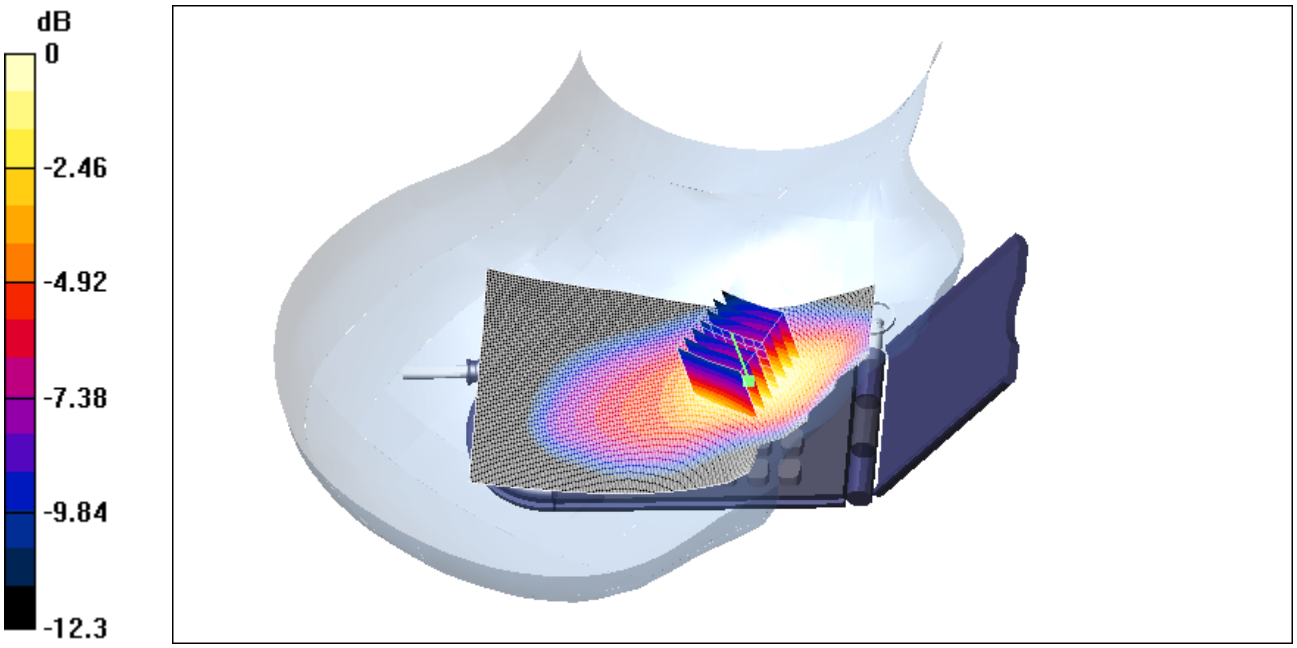

0 dB = 1.71mW/g

Date/Time: 11/22/03 12:43:38

Test Laboratory: ELECTRONIC TECHNOLOGY SYSTEMS DR. GENZ GMBH
File Name: 900_right_ch124_tilted.da4

900_right_ch124_tilted

DUT: E-GSM900/GSM1800/GSM1900 Triple Band GPRS Terminal Equipment; Type: -;
Serial: INNO 89
Program: EGSM 900

Communication System: EGSM 900; Frequency: 914.8 MHz;Duty Cycle: 1:8.3
Medium: Head 900 MHz (σ = 0.961851 mho/m, ε_r = 41.2463, ρ = 1000 kg/m^3)
Phantom section: Right Section

DASY4 Configuration:

- Probe: ET3DV6 - SN1711; ConvF(6.4, 6.4, 6.4); Calibrated: 11/29/2002
- Sensor-Surface: 4mm (Mechanical And Optical Surface Detection)
- Electronics: DAE3 Sn522; Calibrated: 9/11/2002
- Phantom: SAM 12; Type: TP-1217; Serial: QD000P40CA
- Measurement SW: DASY4, V4.1 Build 47; Postprocessing SW: SEMCAD, V1.6 Build 115

INNO89/Area Scan (91x151x1): Measurement grid: dx=10mm, dy=10mm
Reference Value = 20 V/m
Power Drift = 0.02 dB
Maximum value of SAR = 0.553 mW/g

INNO89/Zoom Scan (7x7x7)/Cube 0: Measurement grid: dx=5mm, dy=5mm, dz=5mm
Peak SAR (extrapolated) = 0.67 W/kg
SAR(1 g) = 0.527 mW/g; SAR(10 g) = 0.386 mW/g
Reference Value = 20 V/m
Power Drift = 0.02 dB
Maximum value of SAR = 0.56 mW/g

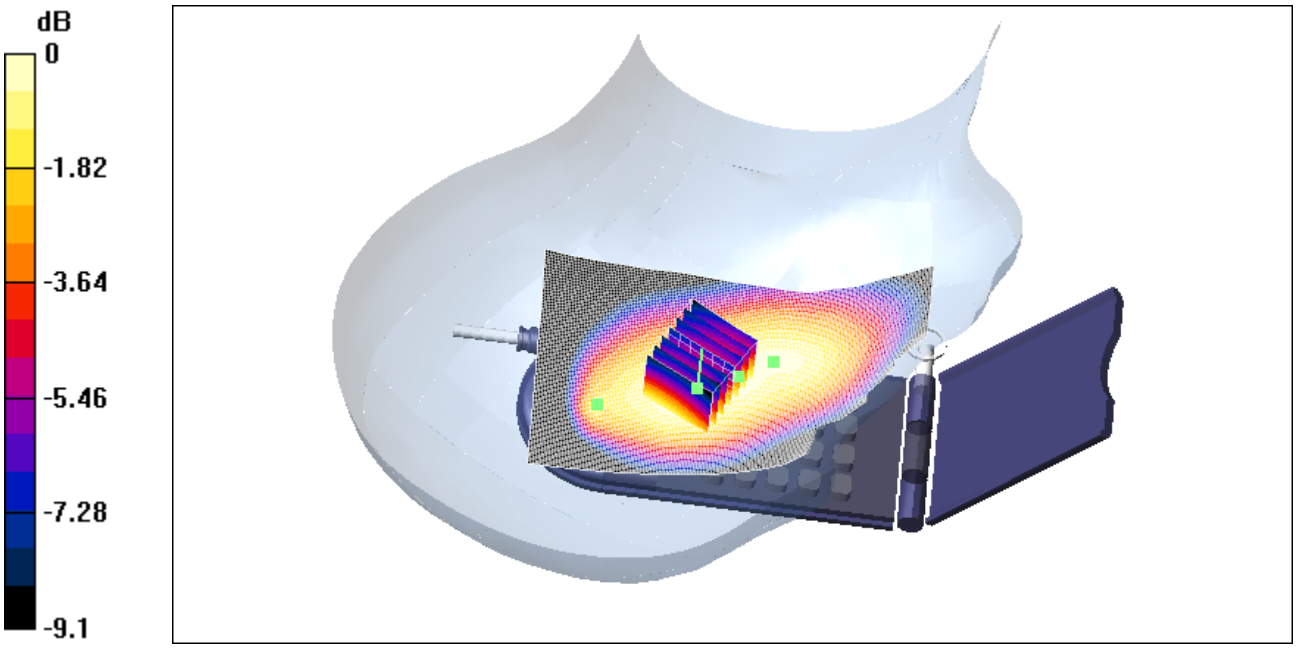

0 dB = 0.555mW/g

Date/Time: 11/25/03 10:43:26

Test Laboratory: ELECTRONIC TECHNOLOGY SYSTEMS DR. GENZ GMBH
File Name: 900_flat_ch37_front.da4

900_flat_ch37_front

DUT: E-GSM900/GSM1800/GSM1900 Triple Band GPRS Terminal Equipment; Type: -;
Serial: INNO 89
Program: EGSM 900

Communication System: EGSM 900; Frequency: 897.4 MHz;Duty Cycle: 1:8.3
Medium: Muscle 900 MHz (σ = 1.03389 mho/m, ε_r = 54.4137, ρ = 1000 kg/m^3)
Phantom section: Flat Section

DASY4 Configuration:

- Probe: ET3DV6 - SN1711; ConvF(6.2, 6.2, 6.2); Calibrated: 11/29/2002
- Sensor-Surface: 4mm (Mechanical And Optical Surface Detection)
- Electronics: DAE3 Sn522; Calibrated: 9/11/2002
- Phantom: SAM 12; Type: TP-1217; Serial: QD000P40CA
- Measurement SW: DASY4, V4.1 Build 47; Postprocessing SW: SEMCAD, V1.6 Build 115

INNO 89/Area Scan (141x101x1): Measurement grid: dx=10mm, dy=10mm
Reference Value = 11.3 V/m
Power Drift = 0.07 dB
Maximum value of SAR = 0.194 mW/g

INNO 89/Zoom Scan (7x7x7)/Cube 0: Measurement grid: dx=5mm, dy=5mm, dz=5mm
Peak SAR (extrapolated) = 0.242 W/kg
SAR(1 g) = 0.184 mW/g; SAR(10 g) = 0.131 mW/g
Reference Value = 11.3 V/m
Power Drift = 0.07 dB
Maximum value of SAR = 0.196 mW/g

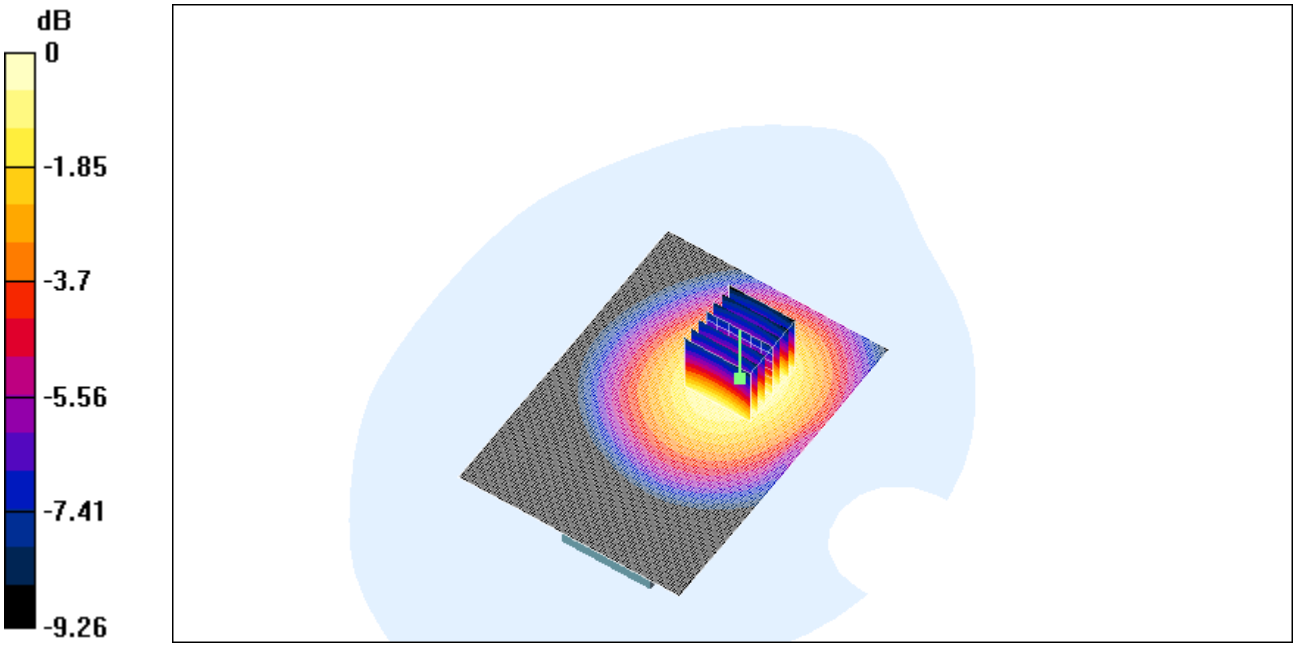

0 dB = 0.196mW/g

Date/Time: 11/25/03 11:20:27

Test Laboratory: ELECTRONIC TECHNOLOGY SYSTEMS DR. GENZ GMBH
File Name: 900_flat_ch37_back.da4

900_flat_ch37_back

DUT: E-GSM900/GSM1800/GSM1900 Triple Band GPRS Terminal Equipment; Type: -;
Serial: INNO 89
Program: EGSM 900

Communication System: EGSM 900; Frequency: 897.4 MHz;Duty Cycle: 1:8.3
Medium: Muscle 900 MHz (σ = 1.03389 mho/m, ε_r = 54.4137, ρ = 1000 kg/m^3)
Phantom section: Flat Section

DASY4 Configuration:

- Probe: ET3DV6 - SN1711; ConvF(6.2, 6.2, 6.2); Calibrated: 11/29/2002
- Sensor-Surface: 4mm (Mechanical And Optical Surface Detection)
- Electronics: DAE3 Sn522; Calibrated: 9/11/2002
- Phantom: SAM 12; Type: TP-1217; Serial: QD000P40CA
- Measurement SW: DASY4, V4.1 Build 47; Postprocessing SW: SEMCAD, V1.6 Build 115

INNO 89/Area Scan (141x101x1): Measurement grid: dx=10mm, dy=10mm
Reference Value = 19.6 V/m
Power Drift = 0.05 dB
Maximum value of SAR = 0.485 mW/g

INNO 89/Zoom Scan (7x7x7)/Cube 0: Measurement grid: dx=5mm, dy=5mm, dz=5mm
Peak SAR (extrapolated) = 0.607 W/kg
SAR(1 g) = 0.453 mW/g; SAR(10 g) = 0.312 mW/g
Reference Value = 19.6 V/m
Power Drift = 0.05 dB
Maximum value of SAR = 0.481 mW/g

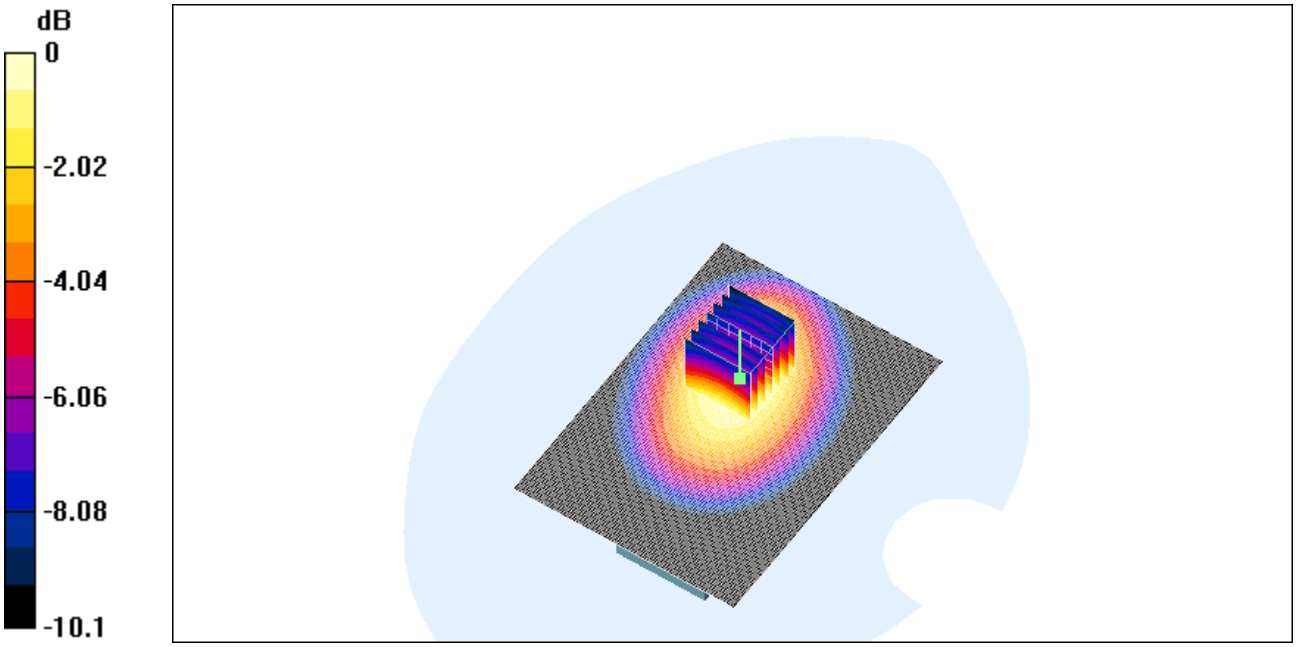

0 dB = 0.481mW/g

Date/Time: 11/25/03 12:29:28

Test Laboratory: ELECTRONIC TECHNOLOGY SYSTEMS DR. GENZ GMBH
File Name: 900_flat_ch975_back.da4

900_flat_ch975_back

DUT: E-GSM900/GSM1800/GSM1900 Triple Band GPRS Terminal Equipment; Type: -;
Serial: INNO 89
Program: EGSM 900

Communication System: EGSM 900; Frequency: 880.2 MHz;Duty Cycle: 1:8.3
Medium: Muscle 900 MHz (σ = 1.01238 mho/m, ε_r = 54.6342, ρ = 1000 kg/m^3)
Phantom section: Flat Section

DASY4 Configuration:

- Probe: ET3DV6 - SN1711; ConvF(6.2, 6.2, 6.2); Calibrated: 11/29/2002
- Sensor-Surface: 4mm (Mechanical And Optical Surface Detection)
- Electronics: DAE3 Sn522; Calibrated: 9/11/2002
- Phantom: SAM 12; Type: TP-1217; Serial: QD000P40CA
- Measurement SW: DASY4, V4.1 Build 47; Postprocessing SW: SEMCAD, V1.6 Build 115

INNO 89/Area Scan (141x101x1): Measurement grid: dx=10mm, dy=10mm
Reference Value = 18 V/m
Power Drift = 0.05 dB
Maximum value of SAR = 0.4 mW/g

INNO 89/Zoom Scan (7x7x7)/Cube 0: Measurement grid: dx=5mm, dy=5mm, dz=5mm
Peak SAR (extrapolated) = 0.512 W/kg
SAR(1 g) = 0.38 mW/g; SAR(10 g) = 0.263 mW/g
Reference Value = 18 V/m
Power Drift = 0.05 dB
Maximum value of SAR = 0.402 mW/g

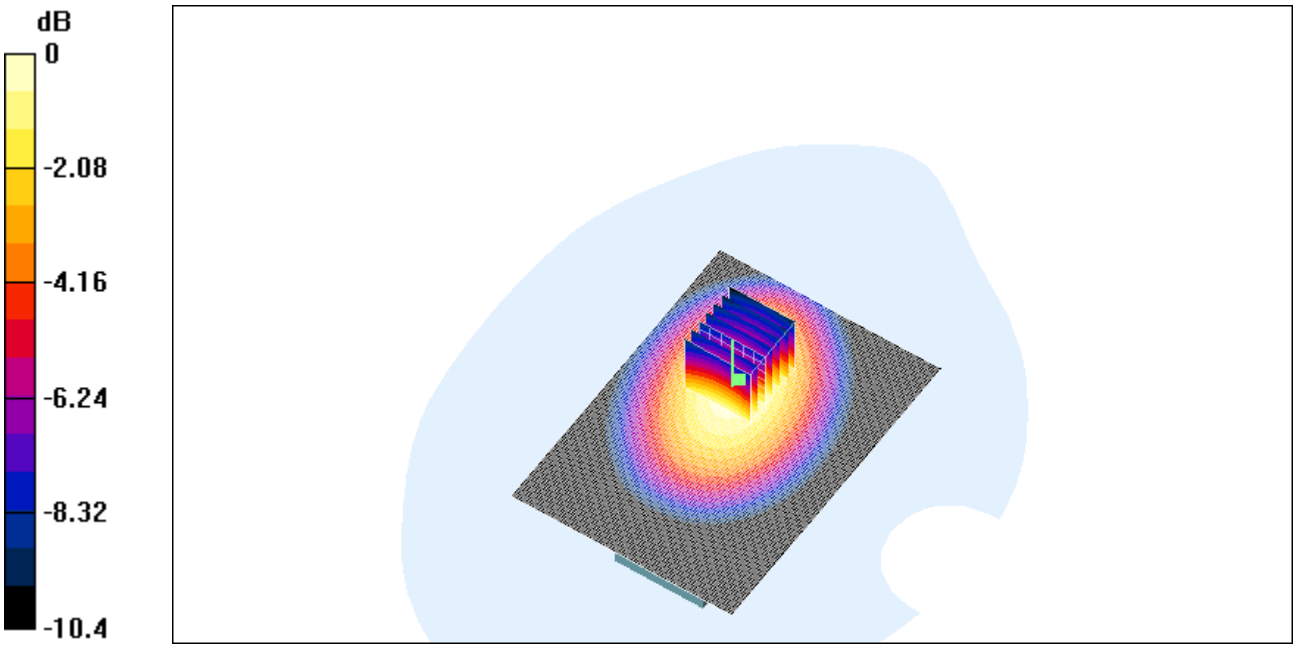

0 dB = 0.402mW/g

Date/Time: 11/25/03 11:55:43

Test Laboratory: ELECTRONIC TECHNOLOGY SYSTEMS DR. GENZ GMBH
File Name: 900_flat_ch124_back.da4

900_flat_ch124_back

DUT: E-GSM900/GSM1800/GSM1900 Triple Band GPRS Terminal Equipment; Type: -;
Serial: INNO 89
Program: EGSM 900

Communication System: EGSM 900; Frequency: 914.8 MHz;Duty Cycle: 1:8.3
Medium: Muscle 900 MHz (σ = 1.05675 mho/m, ε_r = 54.28, ρ = 1000 kg/m^3)
Phantom section: Flat Section

DASY4 Configuration:

- Probe: ET3DV6 - SN1711; ConvF(6.2, 6.2, 6.2); Calibrated: 11/29/2002
- Sensor-Surface: 4mm (Mechanical And Optical Surface Detection)
- Electronics: DAE3 Sn522; Calibrated: 9/11/2002
- Phantom: SAM 12; Type: TP-1217; Serial: QD000P40CA
- Measurement SW: DASY4, V4.1 Build 47; Postprocessing SW: SEMCAD, V1.6 Build 115

INNO 89/Area Scan (141x101x1): Measurement grid: dx=10mm, dy=10mm
Reference Value = 22.3 V/m
Power Drift = 0.08 dB
Maximum value of SAR = 0.607 mW/g

INNO 89/Zoom Scan (7x7x7)/Cube 0: Measurement grid: dx=5mm, dy=5mm, dz=5mm
Peak SAR (extrapolated) = 0.787 W/kg
SAR(1 g) = 0.577 mW/g; SAR(10 g) = 0.398 mW/g
Reference Value = 22.3 V/m
Power Drift = 0.08 dB
Maximum value of SAR = 0.617 mW/g

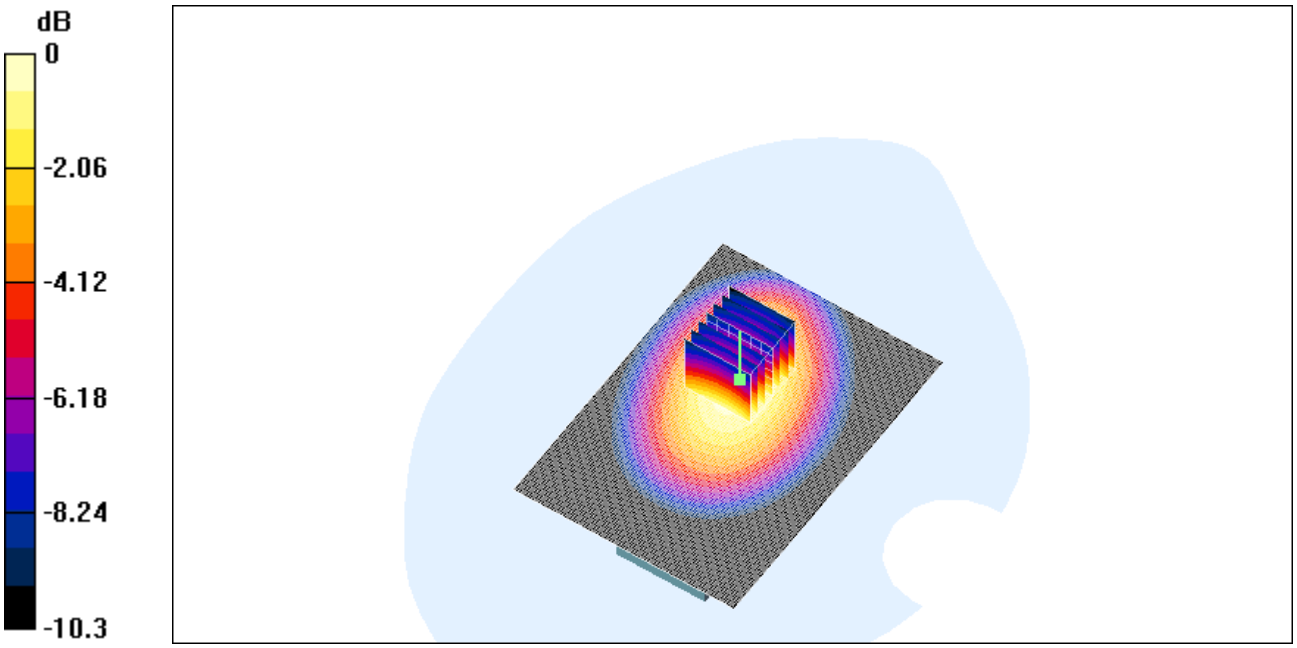

0 dB = 0.617mW/g