Date/Time: 11/18/03 10:00:44

Test Laboratory: ELECTRONIC TECHNOLOGY SYSTEMS DR. GENZ GMBH
File Name: 1900_left_ch512_cheek.da4

## 1900_left_ch512_cheek

**DUT: E-GSM900/GSM1800/GSM1900 Triple Band GPRS Terminal Equipment; Type: -;**
**Serial: INNO 89**
**Program: PCS 1900**

Communication System: GSM 1900; Frequency: 1850.2 MHz;Duty Cycle: 1:8
Medium: Head 1900 MHz ($\sigma$ = 1.3685 mho/m, $\varepsilon_r$ = 39.9283, $\rho$ = 1000 kg/m$^3$)
Phantom section: Left Section

DASY4 Configuration:

- Probe: ET3DV6 - SN1711; ConvF(5.3, 5.3, 5.3); Calibrated: 11/29/2002
- Sensor-Surface: 4mm (Mechanical And Optical Surface Detection)
- Electronics: DAE3 Sn522; Calibrated: 9/11/2002
- Phantom: SAM 12; Type: TP-1217; Serial: QD000P40CA
- Measurement SW: DASY4, V4.1 Build 47; Postprocessing SW: SEMCAD, V1.6 Build 115

**INNO 89/Area Scan (101x161x1):** Measurement grid: dx=10mm, dy=10mm
Reference Value = 8.33 V/m
Power Drift = -0.12 dB
Maximum value of SAR = 0.845 mW/g

**INNO 89/Zoom Scan (7x7x7)/Cube 0:** Measurement grid: dx=5mm, dy=5mm, dz=5mm
Peak SAR (extrapolated) = 1.3 W/kg
SAR(1 g) = 0.773 mW/g; SAR(10 g) = 0.452 mW/g
Reference Value = 8.33 V/m
Power Drift = -0.12 dB
Maximum value of SAR = 0.859 mW/g

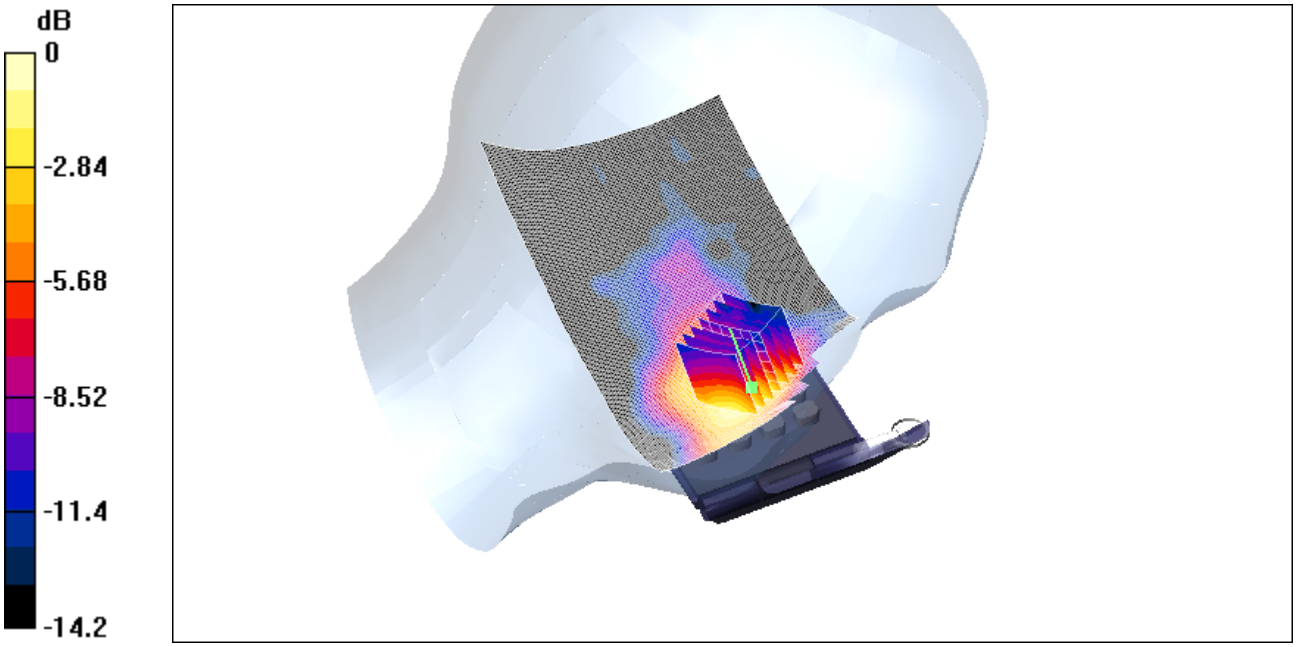


0 dB = 0.859mW/g

Date/Time: 11/18/03 15:22:36

Test Laboratory: ELECTRONIC TECHNOLOGY SYSTEMS DR. GENZ GMBH
File Name: 1900_left_ch512_tilted.da4

## 1900_left_ch512_tilted

**DUT: E-GSM900/GSM1800/GSM1900 Triple Band GPRS Terminal Equipment; Type: -;**
**Serial: INNO 89**
**Program: PCS 1900**

Communication System: GSM 1900; Frequency: 1850.2 MHz;Duty Cycle: 1:8
Medium: Head 1900 MHz ($\sigma$ = 1.3685 mho/m, $\varepsilon_r$ = 39.9283, $\rho$ = 1000 kg/m$^3$)
Phantom section: Left Section

DASY4 Configuration:

- Probe: ET3DV6 - SN1711; ConvF(5.3, 5.3, 5.3); Calibrated: 11/29/2002
- Sensor-Surface: 4mm (Mechanical And Optical Surface Detection)
- Electronics: DAE3 Sn522; Calibrated: 9/11/2002
- Phantom: SAM 12; Type: TP-1217; Serial: QD000P40CA
- Measurement SW: DASY4, V4.1 Build 47; Postprocessing SW: SEMCAD, V1.6 Build 115

**INNO 89/Area Scan (81x141x1):** Measurement grid: dx=10mm, dy=10mm
Reference Value = 8.53 V/m
Power Drift = -0.02 dB
Maximum value of SAR = 0.139 mW/g

**INNO 89/Zoom Scan (7x7x7)/Cube 0:** Measurement grid: dx=5mm, dy=5mm, dz=5mm
Peak SAR (extrapolated) = 0.174 W/kg
SAR(1 g) = 0.124 mW/g; SAR(10 g) = 0.0796 mW/g
Reference Value = 8.53 V/m
Power Drift = -0.02 dB
Maximum value of SAR = 0.132 mW/g

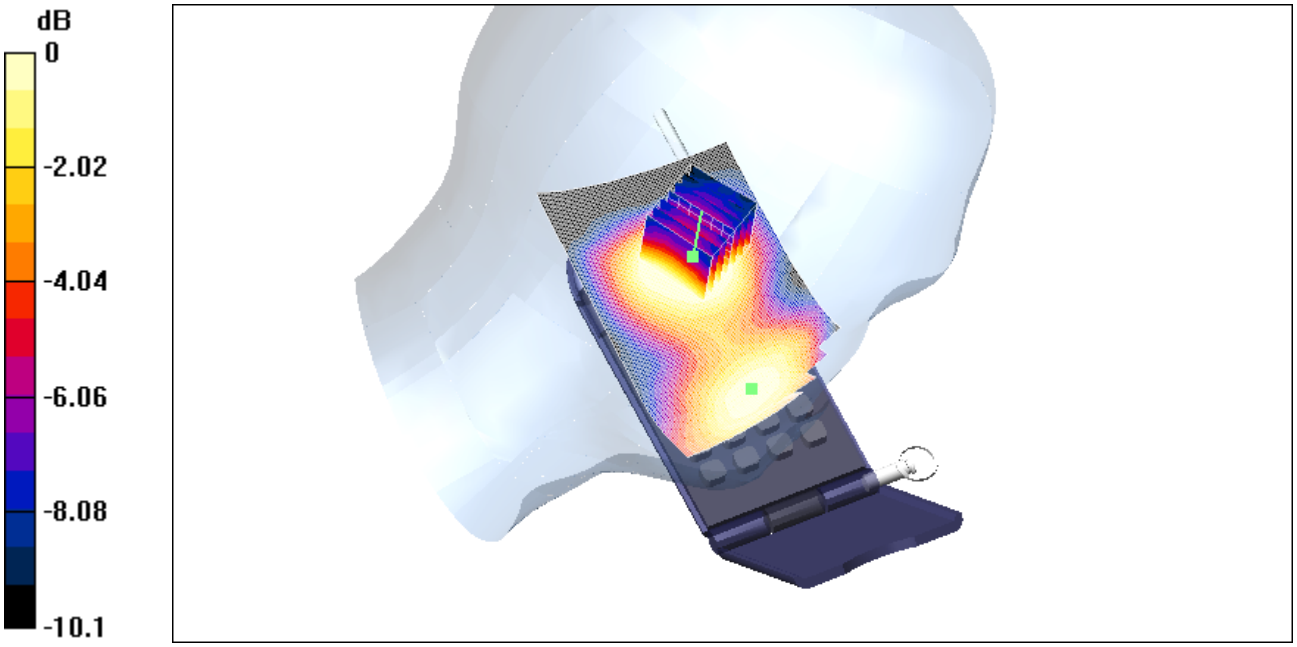


0 dB = 0.0948mW/g

Date/Time: 11/18/03 11:05:39

Test Laboratory: ELECTRONIC TECHNOLOGY SYSTEMS DR. GENZ GMBH
File Name: 1900_left_ch661_cheek.da4

## 1900_left_ch661_cheek

**DUT: E-GSM900/GSM1800/GSM1900 Triple Band GPRS Terminal Equipment; Type: -;**
**Serial: INNO 89**
**Program: PCS 1900**

Communication System: GSM 1900; Frequency: 1880 MHz;Duty Cycle: 1:8
Medium: Head 1900 MHz ($\sigma$ = 1.39732 mho/m, $\varepsilon_r$ = 39.9416, $\rho$ = 1000 kg/m$^3$)
Phantom section: Left Section

DASY4 Configuration:

- Probe: ET3DV6 - SN1711; ConvF(5.3, 5.3, 5.3); Calibrated: 11/29/2002
- Sensor-Surface: 4mm (Mechanical And Optical Surface Detection)
- Electronics: DAE3 Sn522; Calibrated: 9/11/2002
- Phantom: SAM 12; Type: TP-1217; Serial: QD000P40CA
- Measurement SW: DASY4, V4.1 Build 47; Postprocessing SW: SEMCAD, V1.6 Build 115

**INNO 89/Area Scan (81x141x1):** Measurement grid: dx=10mm, dy=10mm
Reference Value = 7.18 V/m
Power Drift = -0.11 dB
Maximum value of SAR = 0.798 mW/g

**INNO 89/Zoom Scan (7x7x7)/Cube 0:** Measurement grid: dx=5mm, dy=5mm, dz=5mm
Peak SAR (extrapolated) = 1.32 W/kg
SAR(1 g) = 0.752 mW/g; SAR(10 g) = 0.438 mW/g
Reference Value = 7.18 V/m
Power Drift = -0.11 dB
Maximum value of SAR = 0.828 mW/g

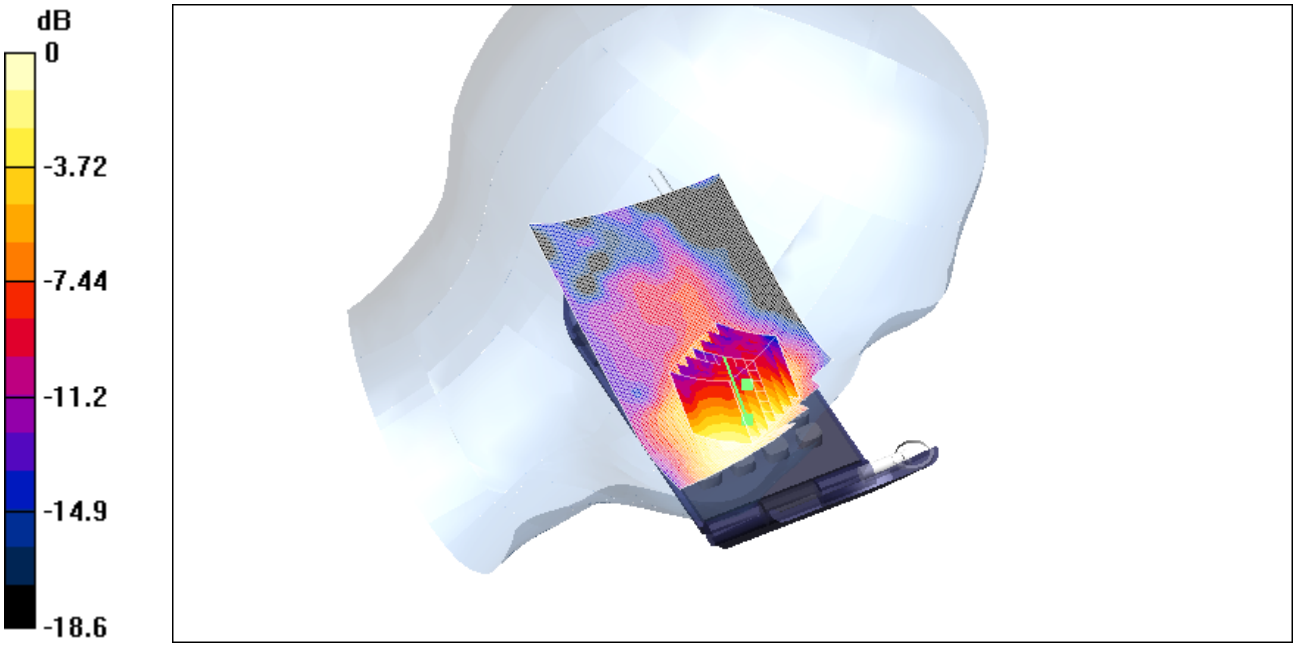


0 dB = 0.777mW/g

Date/Time: 11/18/03 14:33:03

Test Laboratory: ELECTRONIC TECHNOLOGY SYSTEMS DR. GENZ GMBH
File Name: 1900_left_ch661_tilted.da4

## 1900_left_ch661_tilted

**DUT: E-GSM900/GSM1800/GSM1900 Triple Band GPRS Terminal Equipment; Type: -; Serial: INNO 89**
**Program: PCS 1900**

Communication System: GSM 1900; Frequency: 1880 MHz;Duty Cycle: 1:8
Medium: Head 1900 MHz ($\sigma$ = 1.39732 mho/m, $\varepsilon_r$ = 39.9416, $\rho$ = 1000 kg/m$^3$)
Phantom section: Left Section

DASY4 Configuration:

- Probe: ET3DV6 - SN1711; ConvF(5.3, 5.3, 5.3); Calibrated: 11/29/2002
- Sensor-Surface: 4mm (Mechanical And Optical Surface Detection)
- Electronics: DAE3 Sn522; Calibrated: 9/11/2002
- Phantom: SAM 12; Type: TP-1217; Serial: QD000P40CA
- Measurement SW: DASY4, V4.1 Build 47; Postprocessing SW: SEMCAD, V1.6 Build 115

**INNO 89/Area Scan (81x141x1):** Measurement grid: dx=10mm, dy=10mm
Reference Value = 8.61 V/m
Power Drift = -0.02 dB
Maximum value of SAR = 0.141 mW/g

**INNO 89/Zoom Scan (7x7x7)/Cube 0:** Measurement grid: dx=5mm, dy=5mm, dz=5mm
Peak SAR (extrapolated) = 0.173 W/kg
SAR(1 g) = 0.126 mW/g; SAR(10 g) = 0.0799 mW/g
Reference Value = 8.61 V/m
Power Drift = -0.02 dB
Maximum value of SAR = 0.139 mW/g

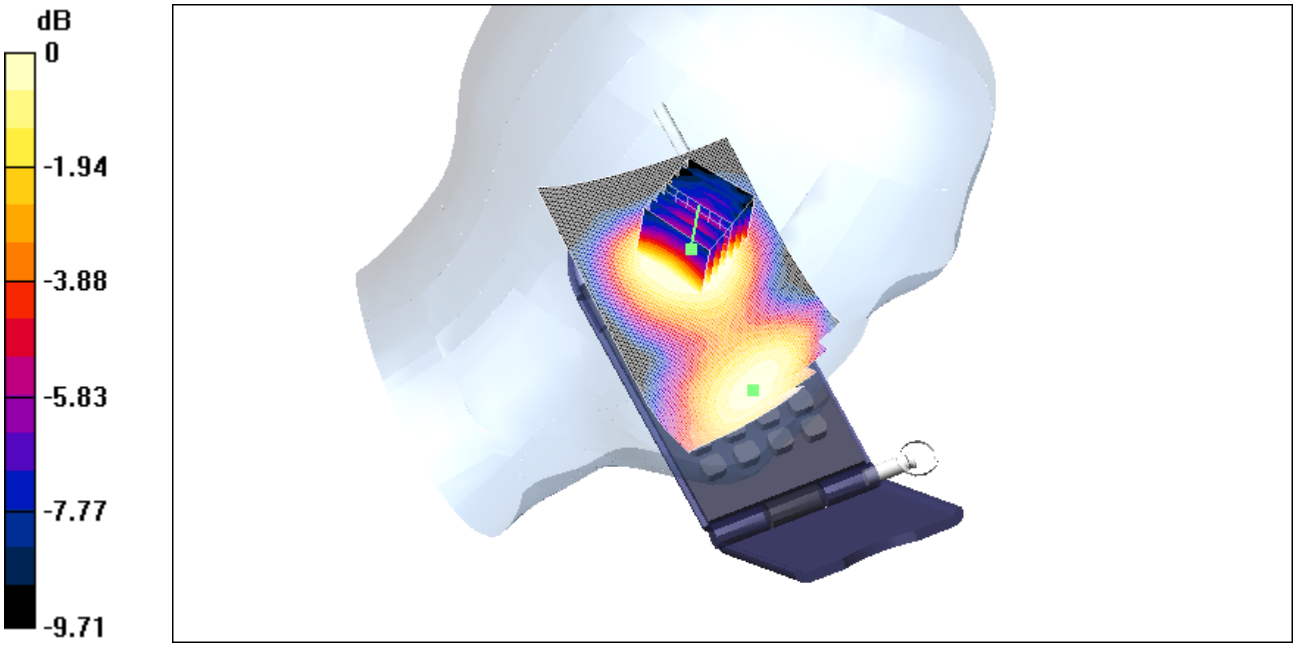


0 dB = 0.0974mW/g

Date/Time: 11/18/03 12:49:12

Test Laboratory: ELECTRONIC TECHNOLOGY SYSTEMS DR. GENZ GMBH
File Name: 1900_left_ch810_cheek.da4

## 1900_left_ch810_cheek

**DUT: E-GSM900/GSM1800/GSM1900 Triple Band GPRS Terminal Equipment; Type: -;**
**Serial: INNO 89**
**Program: PCS 1900**

Communication System: GSM 1900; Frequency: 1909.8 MHz;Duty Cycle: 1:8
Medium: Head 1900 MHz ($\sigma$ = 1.4255 mho/m, $\varepsilon_r$ = 39.78, $\rho$ = 1000 kg/m$^3$)
Phantom section: Left Section

DASY4 Configuration:

- Probe: ET3DV6 - SN1711; ConvF(5.3, 5.3, 5.3); Calibrated: 11/29/2002
- Sensor-Surface: 4mm (Mechanical And Optical Surface Detection)
- Electronics: DAE3 Sn522; Calibrated: 9/11/2002
- Phantom: SAM 12; Type: TP-1217; Serial: QD000P40CA
- Measurement SW: DASY4, V4.1 Build 47; Postprocessing SW: SEMCAD, V1.6 Build 115

**INNO 89/Area Scan (81x141x1):** Measurement grid: dx=10mm, dy=10mm
Reference Value = 7.97 V/m
Power Drift = -0.09 dB
Maximum value of SAR = 0.834 mW/g

**INNO 89/Zoom Scan (7x7x7)/Cube 0:** Measurement grid: dx=5mm, dy=5mm, dz=5mm
Peak SAR (extrapolated) = 1.41 W/kg
SAR(1 g) = 0.787 mW/g; SAR(10 g) = 0.448 mW/g
Reference Value = 7.97 V/m
Power Drift = -0.09 dB
Maximum value of SAR = 0.874 mW/g

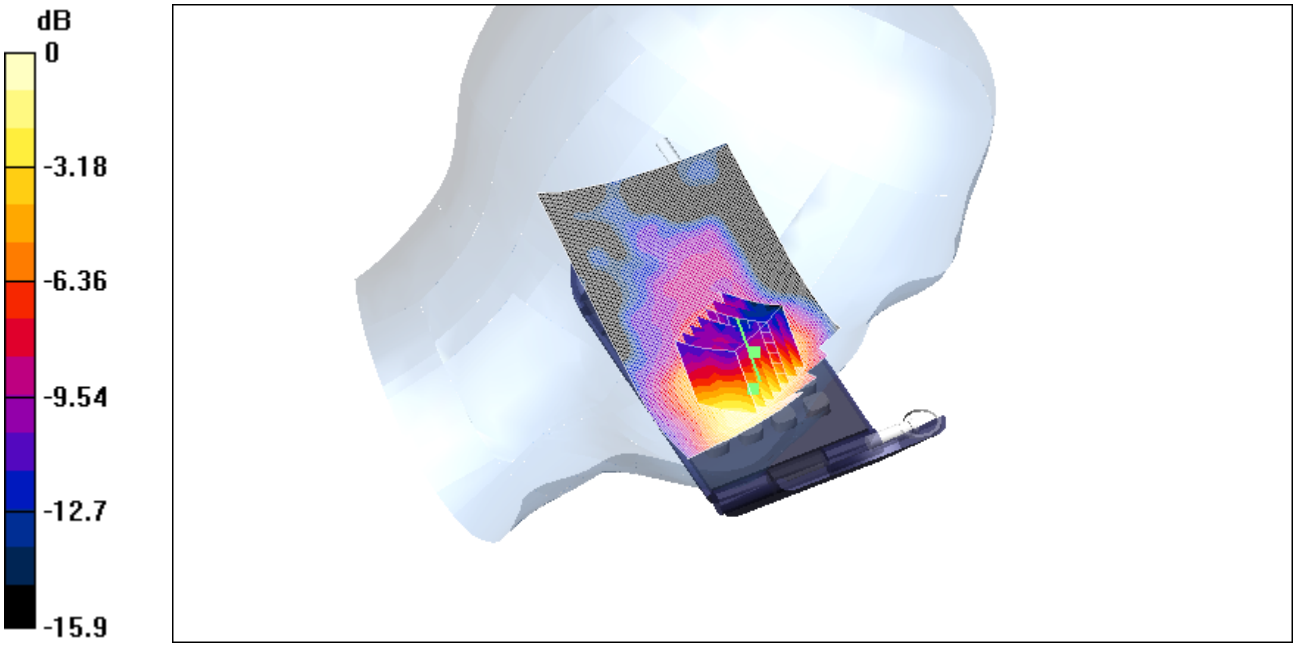


0 dB = 0.874mW/g

Date/Time: 11/18/03 13:42:30

Test Laboratory: ELECTRONIC TECHNOLOGY SYSTEMS DR. GENZ GMBH
File Name: 1900_left_ch810_tilted.da4

## 1900_left_ch810_tilted

**DUT: E-GSM900/GSM1800/GSM1900 Triple Band GPRS Terminal Equipment; Type: -;**
**Serial: INNO 89**
**Program: PCS 1900**

Communication System: GSM 1900; Frequency: 1909.8 MHz;Duty Cycle: 1:8
Medium: Head 1900 MHz ($\sigma$ = 1.4255 mho/m, $\varepsilon_r$ = 39.78, $\rho$ = 1000 kg/m$^3$)
Phantom section: Left Section

DASY4 Configuration:

- Probe: ET3DV6 - SN1711; ConvF(5.3, 5.3, 5.3); Calibrated: 11/29/2002
- Sensor-Surface: 4mm (Mechanical And Optical Surface Detection)
- Electronics: DAE3 Sn522; Calibrated: 9/11/2002
- Phantom: SAM 12; Type: TP-1217; Serial: QD000P40CA
- Measurement SW: DASY4, V4.1 Build 47; Postprocessing SW: SEMCAD, V1.6 Build 115

**INNO 89/Area Scan (81x141x1):** Measurement grid: dx=10mm, dy=10mm
Reference Value = 8.55 V/m
Power Drift = 0.05 dB
Maximum value of SAR = 0.142 mW/g

**INNO 89/Zoom Scan (7x7x7)/Cube 0:** Measurement grid: dx=5mm, dy=5mm, dz=5mm
Peak SAR (extrapolated) = 0.19 W/kg
SAR(1 g) = 0.127 mW/g; SAR(10 g) = 0.0803 mW/g
Reference Value = 8.55 V/m
Power Drift = 0.05 dB
Maximum value of SAR = 0.135 mW/g

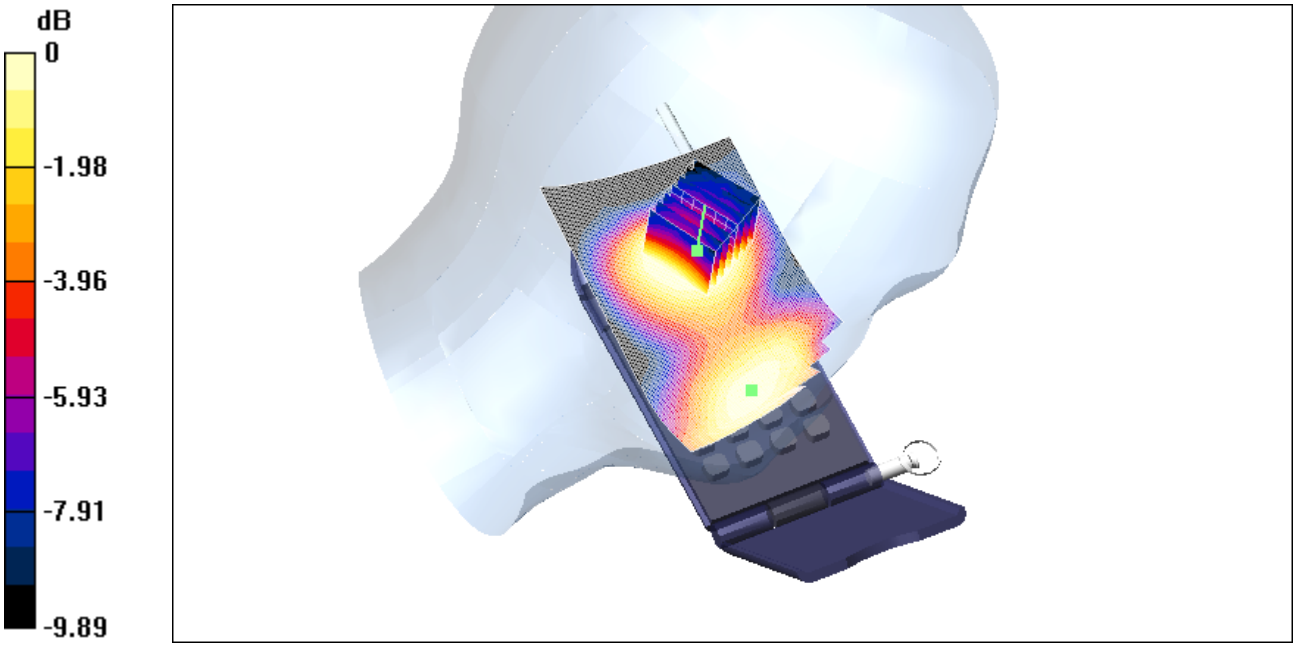


0 dB = 0.0962mW/g

Date/Time: 11/18/03 20:15:58

Test Laboratory: ELECTRONIC TECHNOLOGY SYSTEMS DR. GENZ GMBH
File Name: 1900_right_ch512_cheek.da4

## 1900_right_ch512_cheek

**DUT: E-GSM900/GSM1800/GSM1900 Triple Band GPRS Terminal Equipment; Type: -;**
**Serial: INNO 89**
**Program: PCS 1900**

Communication System: GSM 1900; Frequency: 1850.2 MHz;Duty Cycle: 1:8
Medium: Head 1900 MHz ($\sigma$ = 1.3685 mho/m, $\varepsilon_r$ = 39.9283, $\rho$ = 1000 kg/m$^3$)
Phantom section: Right Section

DASY4 Configuration:

- Probe: ET3DV6 - SN1711; ConvF(5.3, 5.3, 5.3); Calibrated: 11/29/2002
- Sensor-Surface: 4mm (Mechanical And Optical Surface Detection)
- Electronics: DAE3 Sn522; Calibrated: 9/11/2002
- Phantom: SAM 12; Type: TP-1217; Serial: QD000P40CA
- Measurement SW: DASY4, V4.1 Build 47; Postprocessing SW: SEMCAD, V1.6 Build 115

**INNO 89/Area Scan (81x151x1):** Measurement grid: dx=10mm, dy=10mm
Reference Value = 6.06 V/m
Power Drift = -0.07 dB
Maximum value of SAR = 1.02 mW/g

**INNO 89/Zoom Scan (7x7x7)/Cube 0:** Measurement grid: dx=5mm, dy=5mm, dz=5mm
Peak SAR (extrapolated) = 1.45 W/kg
SAR(1 g) = 0.919 mW/g; SAR(10 g) = 0.503 mW/g
Reference Value = 6.06 V/m
Power Drift = -0.07 dB
Maximum value of SAR = 1.01 mW/g

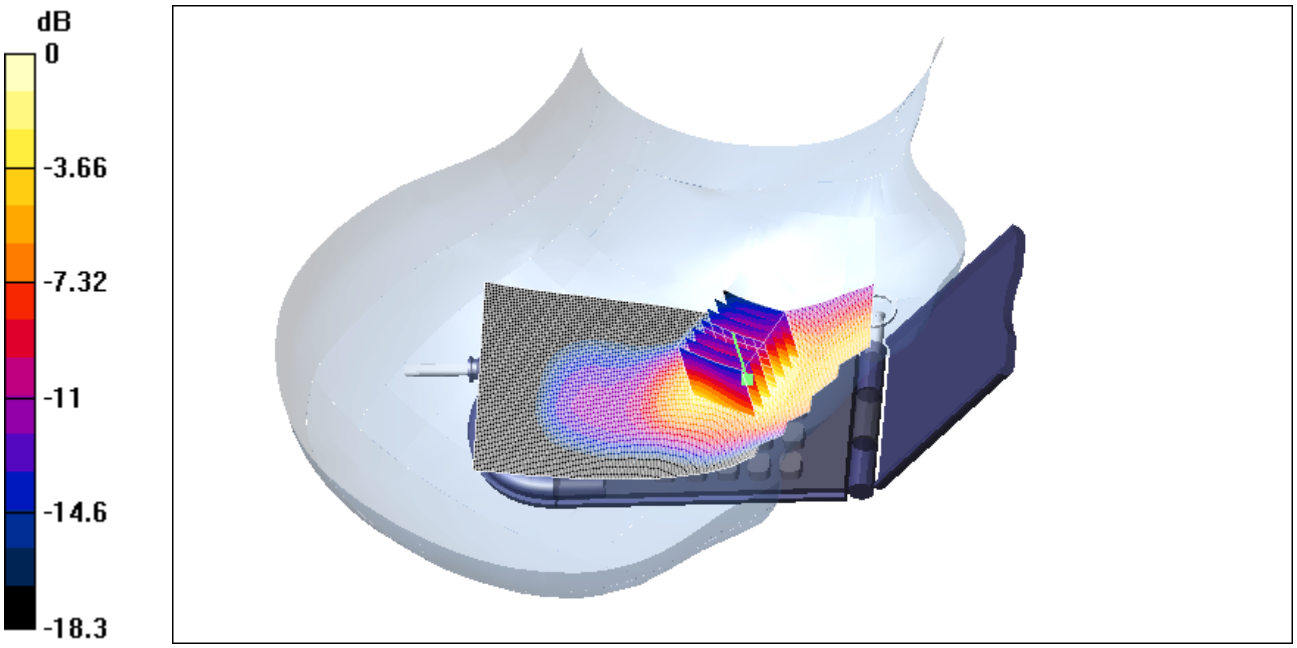


0 dB = 1.01mW/g

Date/Time: 11/18/03 16:09:26

Test Laboratory: ELECTRONIC TECHNOLOGY SYSTEMS DR. GENZ GMBH
File Name: 1900_right_ch512_tilted.da4

## 1900_right_ch512_tilted

**DUT: E-GSM900/GSM1800/GSM1900 Triple Band GPRS Terminal Equipment; Type: -;**
**Serial: INNO 89**
**Program: PCS 1900**

Communication System: GSM 1900; Frequency: 1850.2 MHz;Duty Cycle: 1:8
Medium: Head 1900 MHz ($\sigma$ = 1.3685 mho/m, $\varepsilon_r$ = 39.9283, $\rho$ = 1000 kg/m$^3$)
Phantom section: Right Section

DASY4 Configuration:

- Probe: ET3DV6 - SN1711; ConvF(5.3, 5.3, 5.3); Calibrated: 11/29/2002
- Sensor-Surface: 4mm (Mechanical And Optical Surface Detection)
- Electronics: DAE3 Sn522; Calibrated: 9/11/2002
- Phantom: SAM 12; Type: TP-1217; Serial: QD000P40CA
- Measurement SW: DASY4, V4.1 Build 47; Postprocessing SW: SEMCAD, V1.6 Build 115

**INNO 89/Area Scan (81x151x1):** Measurement grid: dx=10mm, dy=10mm
Reference Value = 8.31 V/m
Power Drift = -0.01 dB
Maximum value of SAR = 0.107 mW/g

**INNO 89/Zoom Scan (7x7x7)/Cube 0:** Measurement grid: dx=5mm, dy=5mm, dz=5mm
Peak SAR (extrapolated) = 0.143 W/kg
SAR(1 g) = 0.0958 mW/g; SAR(10 g) = 0.0586 mW/g
Reference Value = 8.31 V/m
Power Drift = -0.01 dB
Maximum value of SAR = 0.104 mW/g

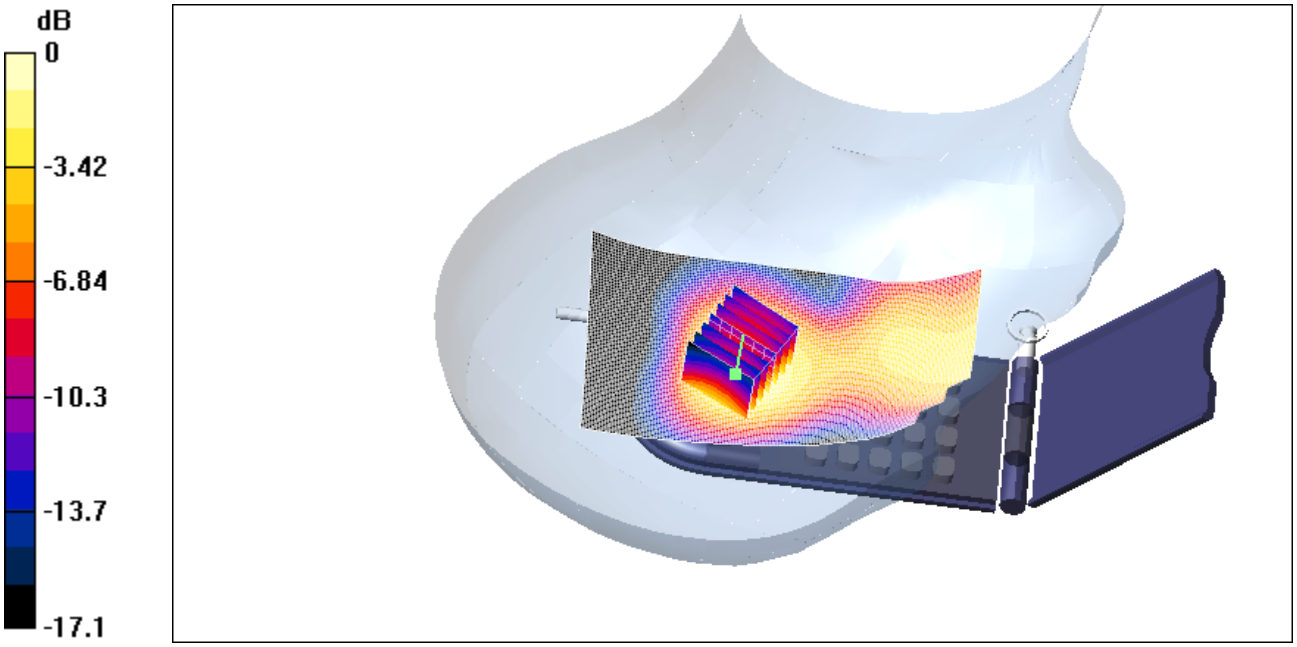


0 dB = 0.104mW/g

Date/Time: 11/18/03 19:42:39

Test Laboratory: ELECTRONIC TECHNOLOGY SYSTEMS DR. GENZ GMBH
File Name: 1900_right_ch661_cheek.da4

## 1900_right_ch661_cheek

**DUT: E-GSM900/GSM1800/GSM1900 Triple Band GPRS Terminal Equipment; Type: -;**
**Serial: INNO 89**
**Program: PCS 1900**

Communication System: GSM 1900; Frequency: 1880 MHz;Duty Cycle: 1:8
Medium: Head 1900 MHz ($\sigma$ = 1.39732 mho/m, $\varepsilon_r$ = 39.9416, $\rho$ = 1000 kg/m$^3$)
Phantom section: Right Section

DASY4 Configuration:

- Probe: ET3DV6 - SN1711; ConvF(5.3, 5.3, 5.3); Calibrated: 11/29/2002
- Sensor-Surface: 4mm (Mechanical And Optical Surface Detection)
- Electronics: DAE3 Sn522; Calibrated: 9/11/2002
- Phantom: SAM 12; Type: TP-1217; Serial: QD000P40CA
- Measurement SW: DASY4, V4.1 Build 47; Postprocessing SW: SEMCAD, V1.6 Build 115

**INNO 89/Area Scan (81x151x1):** Measurement grid: dx=10mm, dy=10mm
Reference Value = 6.45 V/m
Power Drift = -0.004 dB
Maximum value of SAR = 1.06 mW/g

**INNO 89/Zoom Scan (7x7x7)/Cube 0:** Measurement grid: dx=5mm, dy=5mm, dz=5mm
Peak SAR (extrapolated) = 1.52 W/kg
SAR(1 g) = 0.961 mW/g; SAR(10 g) = 0.522 mW/g
Reference Value = 6.45 V/m
Power Drift = -0.004 dB
Maximum value of SAR = 1.06 mW/g

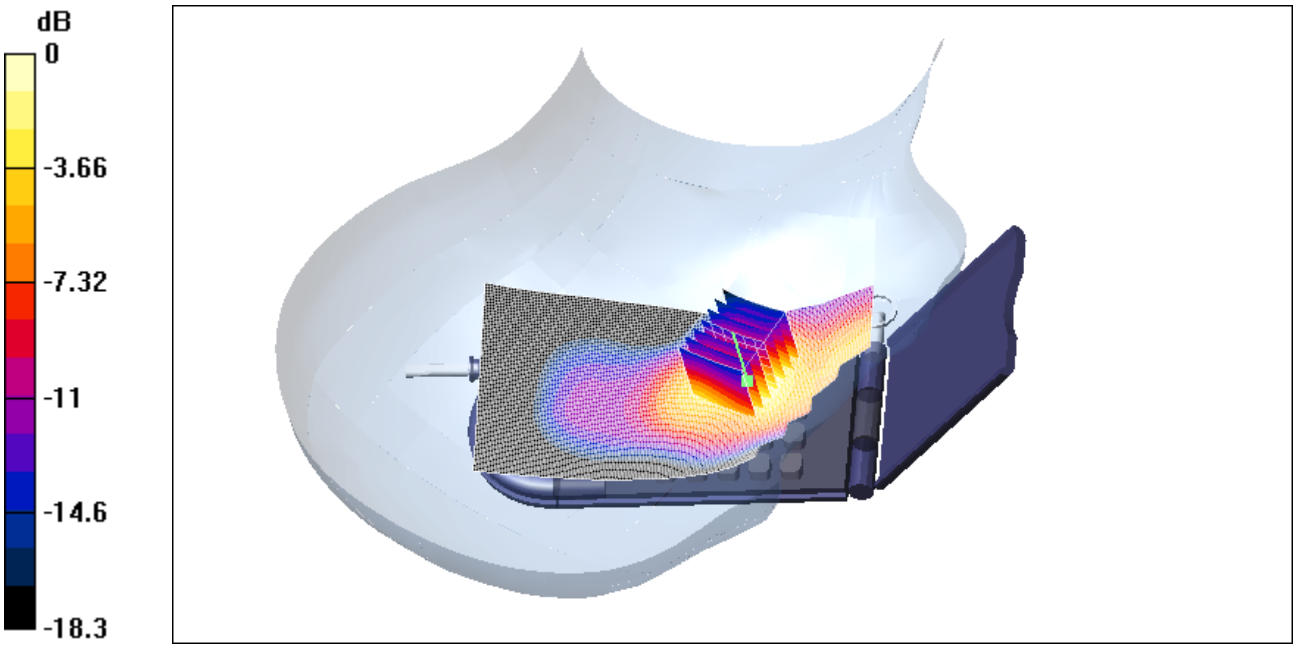


0 dB = 1.06mW/g

Date/Time: 11/18/03 17:37:15

Test Laboratory: ELECTRONIC TECHNOLOGY SYSTEMS DR. GENZ GMBH
File Name: 1900_right_ch661_tilted.da4

## 1900_right_ch661_tilted

**DUT: E-GSM900/GSM1800/GSM1900 Triple Band GPRS Terminal Equipment; Type: -;**
**Serial: INNO 89**
**Program: PCS 1900**

Communication System: GSM 1900; Frequency: 1880 MHz;Duty Cycle: 1:8
Medium: Head 1900 MHz ($\sigma$ = 1.39732 mho/m, $\varepsilon_r$ = 39.9416, $\rho$ = 1000 kg/m$^3$)
Phantom section: Right Section

DASY4 Configuration:

- Probe: ET3DV6 - SN1711; ConvF(5.3, 5.3, 5.3); Calibrated: 11/29/2002
- Sensor-Surface: 4mm (Mechanical And Optical Surface Detection)
- Electronics: DAE3 Sn522; Calibrated: 9/11/2002
- Phantom: SAM 12; Type: TP-1217; Serial: QD000P40CA
- Measurement SW: DASY4, V4.1 Build 47; Postprocessing SW: SEMCAD, V1.6 Build 115

**INNO 89/Area Scan (81x151x1):** Measurement grid: dx=10mm, dy=10mm
Reference Value = 8.9 V/m
Power Drift = -0.05 dB
Maximum value of SAR = 0.116 mW/g

**INNO 89/Zoom Scan (7x7x7)/Cube 0:** Measurement grid: dx=5mm, dy=5mm, dz=5mm
Peak SAR (extrapolated) = 0.156 W/kg
SAR(1 g) = 0.106 mW/g; SAR(10 g) = 0.0645 mW/g
Reference Value = 8.9 V/m
Power Drift = -0.05 dB
Maximum value of SAR = 0.113 mW/g

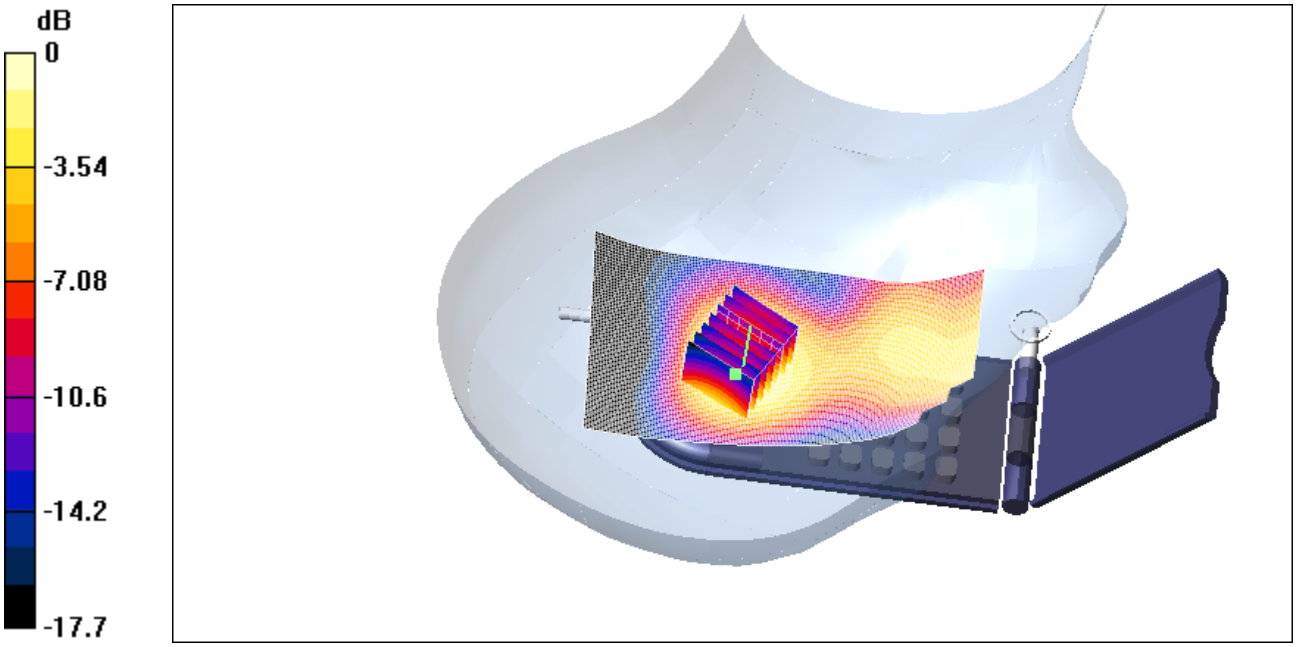


0 dB = 0.113mW/g

Date/Time: 11/18/03 19:08:58

Test Laboratory: ELECTRONIC TECHNOLOGY SYSTEMS DR. GENZ GMBH
File Name: 1900_right_ch810_cheek.da4

## 1900_right_ch810_cheek

**DUT: E-GSM900/GSM1800/GSM1900 Triple Band GPRS Terminal Equipment; Type: -;**
**Serial: INNO 89**
**Program: PCS 1900**

Communication System: GSM 1900; Frequency: 1909.8 MHz;Duty Cycle: 1:8
Medium: Head 1900 MHz ($\sigma$ = 1.4255 mho/m, $\varepsilon_r$ = 39.78, $\rho$ = 1000 kg/m$^3$)
Phantom section: Right Section

DASY4 Configuration:

- Probe: ET3DV6 - SN1711; ConvF(5.3, 5.3, 5.3); Calibrated: 11/29/2002
- Sensor-Surface: 4mm (Mechanical And Optical Surface Detection)
- Electronics: DAE3 Sn522; Calibrated: 9/11/2002
- Phantom: SAM 12; Type: TP-1217; Serial: QD000P40CA
- Measurement SW: DASY4, V4.1 Build 47; Postprocessing SW: SEMCAD, V1.6 Build 115

**INNO 89/Area Scan (81x151x1):** Measurement grid: dx=10mm, dy=10mm
Reference Value = 6.8 V/m
Power Drift = 0.03 dB
Maximum value of SAR = 1.14 mW/g

**INNO 89/Zoom Scan (7x7x7)/Cube 0:** Measurement grid: dx=5mm, dy=5mm, dz=5mm
Peak SAR (extrapolated) = 1.67 W/kg
SAR(1 g) = 1.04 mW/g; SAR(10 g) = 0.559 mW/g
Reference Value = 6.8 V/m
Power Drift = 0.03 dB
Maximum value of SAR = 1.16 mW/g

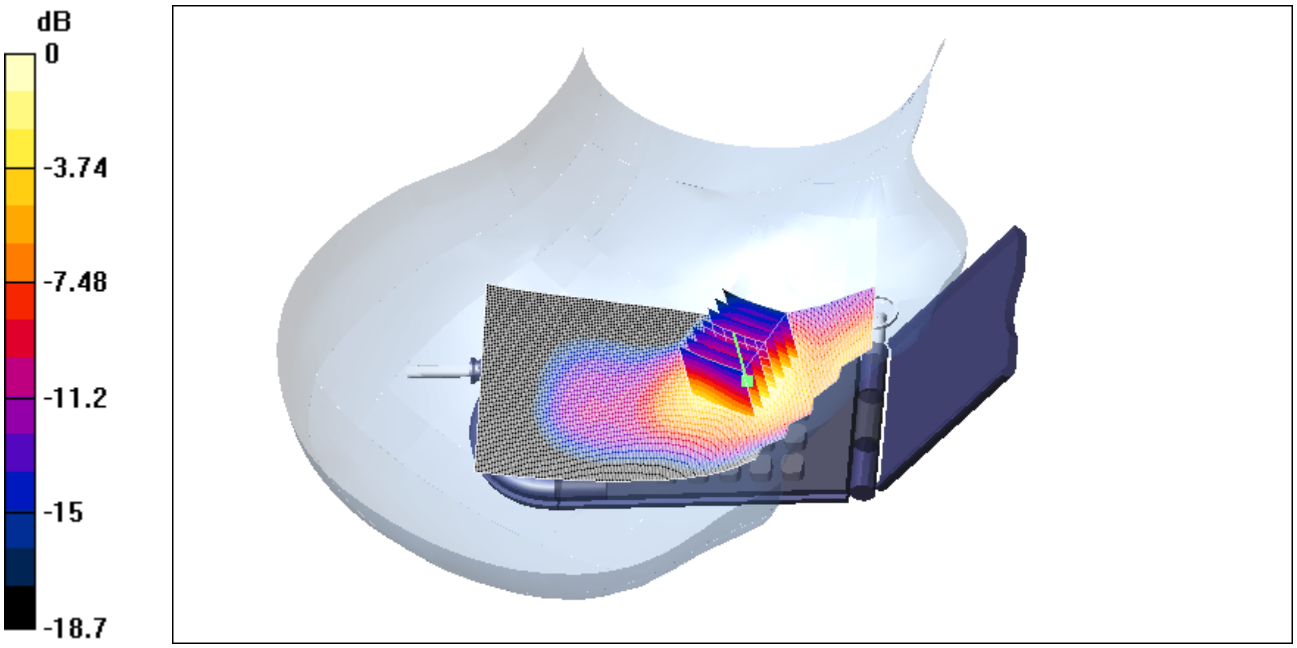


0 dB = 1.16mW/g

Date/Time: 11/18/03 18:32:59

Test Laboratory: ELECTRONIC TECHNOLOGY SYSTEMS DR. GENZ GMBH
File Name: 1900_right_ch810_tilted.da4

## 1900_right_ch810_tilted

**DUT: E-GSM900/GSM1800/GSM1900 Triple Band GPRS Terminal Equipment; Type: -;**
**Serial: INNO 89**
**Program: PCS 1900**

Communication System: GSM 1900; Frequency: 1909.8 MHz;Duty Cycle: 1:8
Medium: Head 1900 MHz ($\sigma$ = 1.4255 mho/m, $\varepsilon_r$ = 39.78, $\rho$ = 1000 kg/m$^3$)
Phantom section: Right Section

DASY4 Configuration:

- Probe: ET3DV6 - SN1711; ConvF(5.3, 5.3, 5.3); Calibrated: 11/29/2002
- Sensor-Surface: 4mm (Mechanical And Optical Surface Detection)
- Electronics: DAE3 Sn522; Calibrated: 9/11/2002
- Phantom: SAM 12; Type: TP-1217; Serial: QD000P40CA
- Measurement SW: DASY4, V4.1 Build 47; Postprocessing SW: SEMCAD, V1.6 Build 115

**INNO 89/Area Scan (81x151x1):** Measurement grid: dx=10mm, dy=10mm
Reference Value = 9.59 V/m
Power Drift = 0.01 dB
Maximum value of SAR = 0.138 mW/g

**INNO 89/Zoom Scan (7x7x7)/Cube 0:** Measurement grid: dx=5mm, dy=5mm, dz=5mm
Peak SAR (extrapolated) = 0.197 W/kg
SAR(1 g) = 0.129 mW/g; SAR(10 g) = 0.0767 mW/g
Reference Value = 9.59 V/m
Power Drift = 0.01 dB
Maximum value of SAR = 0.139 mW/g

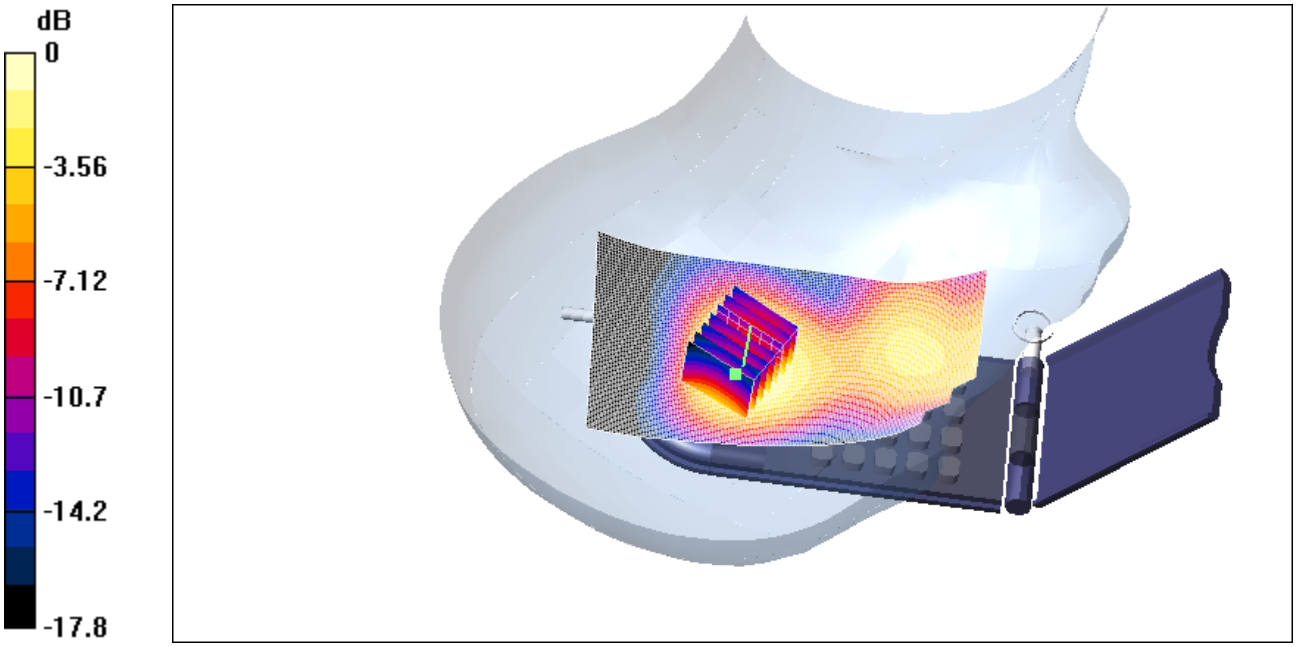


0 dB = 0.139mW/g

Date/Time: 11/19/03 20:42:01

Test Laboratory: ELECTRONIC TECHNOLOGY SYSTEMS DR. GENZ GMBH
File Name: 1900_flat_ch512_front.da4

## 1900_flat_ch512_front

**DUT: E-GSM900/GSM1800/GSM1900 Triple Band GPRS Terminal Equipment; Type: -;**
**Serial: INNO 89**
**Program: PCS 1900**

Communication System: GSM 1900; Frequency: 1850.2 MHz;Duty Cycle: 1:8
Medium: Muscle 1800 MHz ($\sigma$ = 1.5128 mho/m, $\varepsilon_r$ = 51.9802, $\rho$ = 1000 kg/m$^3$)
Phantom section: Flat Section

DASY4 Configuration:

- Probe: ET3DV6 - SN1711; ConvF(5, 5, 5); Calibrated: 11/29/2002
- Sensor-Surface: 4mm (Mechanical And Optical Surface Detection)
- Electronics: DAE3 Sn522; Calibrated: 9/11/2002
- Phantom: SAM 12; Type: TP-1217; Serial: QD000P40CA
- Measurement SW: DASY4, V4.1 Build 47; Postprocessing SW: SEMCAD, V1.6 Build 115

**INNO89/Area Scan (91x151x1):** Measurement grid: dx=10mm, dy=10mm
Reference Value = 8.71 V/m
Power Drift = -0.04 dB
Maximum value of SAR = 0.106 mW/g

**INNO89/Zoom Scan (7x7x7)/Cube 0:** Measurement grid: dx=5mm, dy=5mm, dz=5mm
Peak SAR (extrapolated) = 0.148 W/kg
SAR(1 g) = 0.0992 mW/g; SAR(10 g) = 0.0648 mW/g
Reference Value = 8.71 V/m
Power Drift = -0.04 dB
Maximum value of SAR = 0.104 mW/g

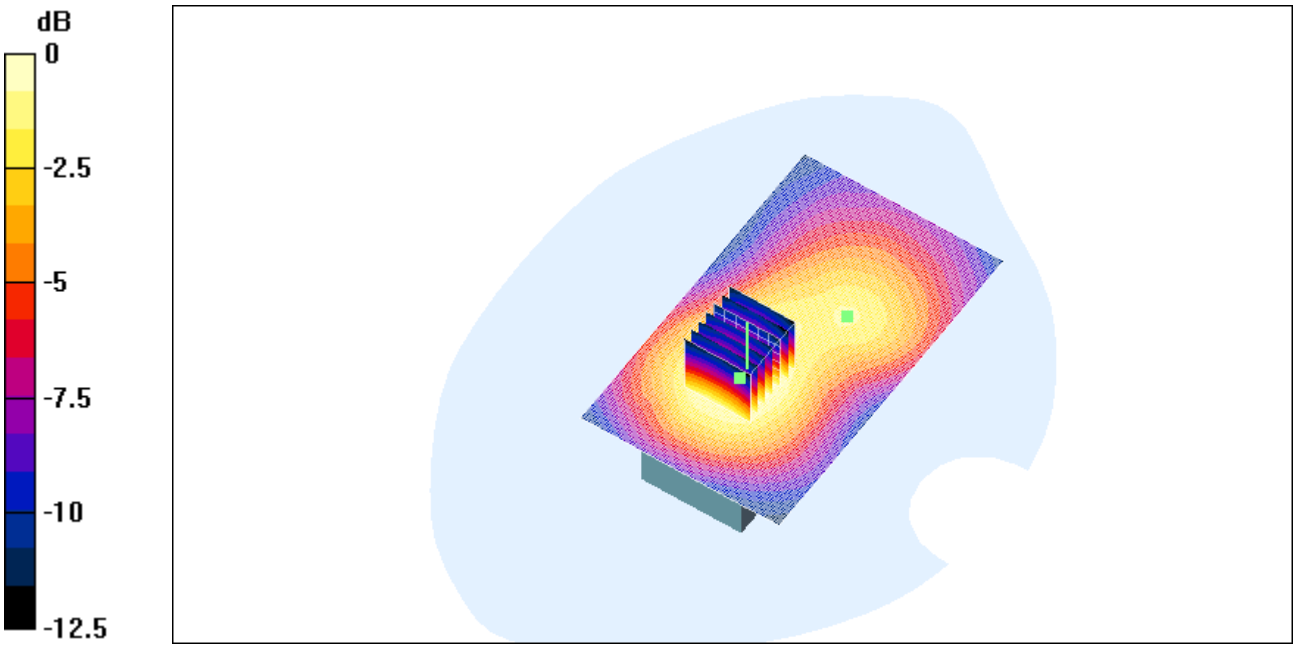


0 dB = 0.104mW/g

Date/Time: 11/14/03 12:31:25

Test Laboratory: ELECTRONIC TECHNOLOGY SYSTEMS DR. GENZ GMBH
File Name: 1900_flat_ch512_back.da4

## 1900_flat_ch512_back

**DUT: E-GSM900/GSM1800/GSM1900 Triple Band GPRS Terminal Equipment; Type: -;**
**Serial: INNO 89**
**Program: PCS 1900**

Communication System: GSM 1900; Frequency: 1850.2 MHz;Duty Cycle: 1:8
Medium: Muscle 1900 MHz ($\sigma$ = 1.50124 mho/m, $\varepsilon_r$ = 51.4688, $\rho$ = 1000 kg/m$^3$)
Phantom section: Flat Section

DASY4 Configuration:

- Probe: ET3DV6 - SN1711; ConvF(5, 5, 5); Calibrated: 11/29/2002
- Sensor-Surface: 4mm (Mechanical And Optical Surface Detection)
- Electronics: DAE3 Sn522; Calibrated: 9/11/2002
- Phantom: SAM 12; Type: TP-1217; Serial: QD000P40CA
- Measurement SW: DASY4, V4.1 Build 47; Postprocessing SW: SEMCAD, V1.6 Build 115

**INNO 89/Area Scan (141x81x1):** Measurement grid: dx=10mm, dy=10mm
Reference Value = 10.9 V/m
Power Drift = -0.04 dB
Maximum value of SAR = 0.271 mW/g

**INNO 89/Zoom Scan (7x7x7)/Cube 0:** Measurement grid: dx=5mm, dy=5mm, dz=5mm
Peak SAR (extrapolated) = 0.399 W/kg
SAR(1 g) = 0.249 mW/g; SAR(10 g) = 0.154 mW/g
Reference Value = 10.9 V/m
Power Drift = -0.04 dB
Maximum value of SAR = 0.268 mW/g

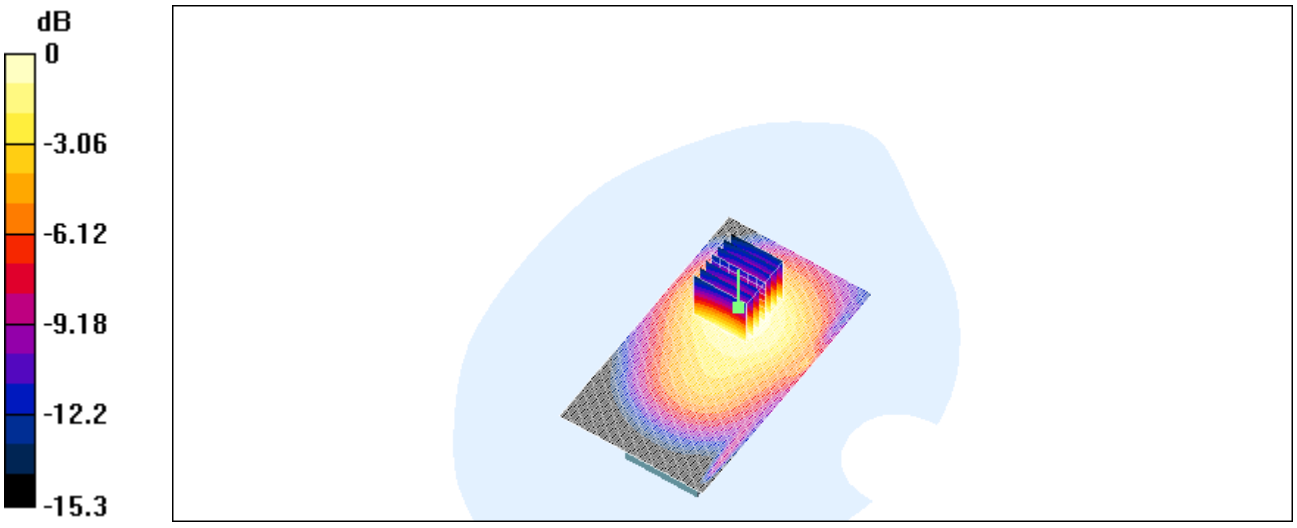


0 dB = 0.268mW/g

Date/Time: 11/19/03 21:30:52

Test Laboratory: ELECTRONIC TECHNOLOGY SYSTEMS DR. GENZ GMBH
File Name: 1900_flat_ch661_front.da4

## 1900_flat_ch661_front

**DUT: E-GSM900/GSM1800/GSM1900 Triple Band GPRS Terminal Equipment; Type: -;**
**Serial: INNO 89**
**Program: PCS 1900**

Communication System: GSM 1900; Frequency: 1880 MHz;Duty Cycle: 1:8
Medium: Muscle 1800 MHz ($\sigma$ = 1.55213 mho/m, $\varepsilon_r$ = 51.8513, $\rho$ = 1000 kg/m$^3$)
Phantom section: Flat Section

DASY4 Configuration:

- Probe: ET3DV6 - SN1711; ConvF(5, 5, 5); Calibrated: 11/29/2002
- Sensor-Surface: 4mm (Mechanical And Optical Surface Detection)
- Electronics: DAE3 Sn522; Calibrated: 9/11/2002
- Phantom: SAM 12; Type: TP-1217; Serial: QD000P40CA
- Measurement SW: DASY4, V4.1 Build 47; Postprocessing SW: SEMCAD, V1.6 Build 115

**INNO89/Area Scan (91x151x1):** Measurement grid: dx=10mm, dy=10mm
Reference Value = 8.42 V/m
Power Drift = 0.03 dB
Maximum value of SAR = 0.106 mW/g

**INNO89/Zoom Scan (7x7x7)/Cube 0:** Measurement grid: dx=5mm, dy=5mm, dz=5mm
Peak SAR (extrapolated) = 0.149 W/kg
SAR(1 g) = 0.0978 mW/g; SAR(10 g) = 0.0635 mW/g
Reference Value = 8.42 V/m
Power Drift = 0.03 dB
Maximum value of SAR = 0.103 mW/g

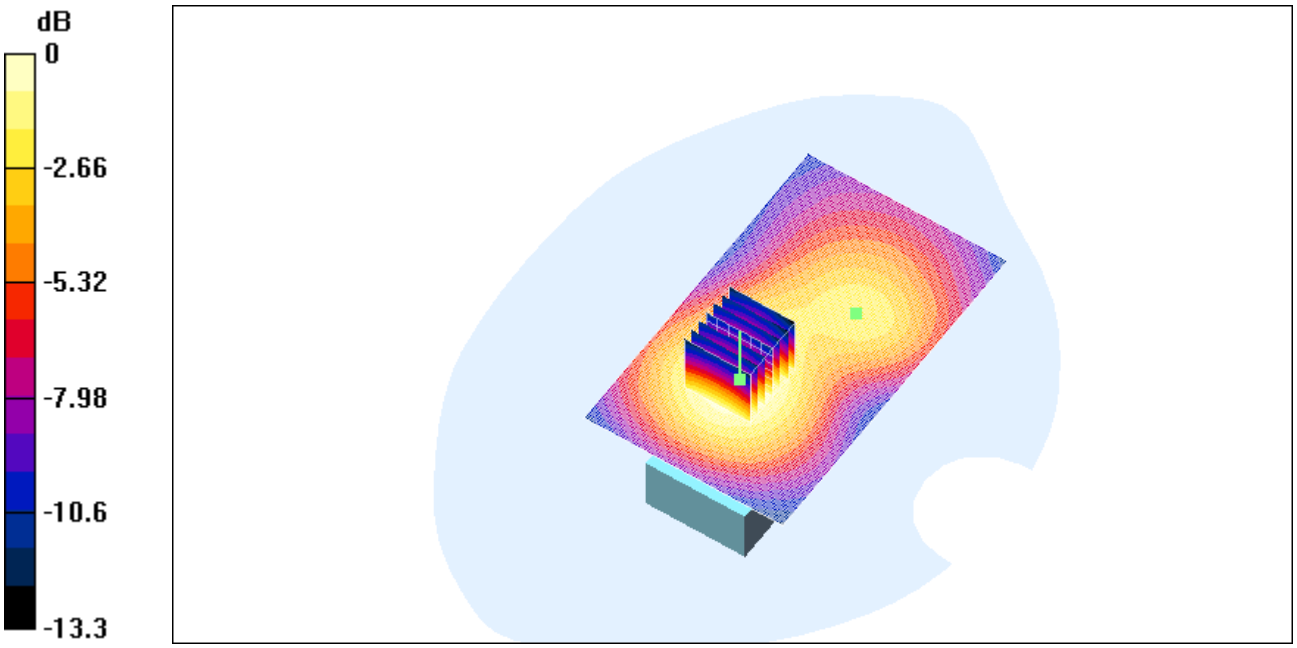


0 dB = 0.103mW/g

Date/Time: 11/14/03 13:10:20

Test Laboratory: ELECTRONIC TECHNOLOGY SYSTEMS DR. GENZ GMBH
File Name: 1900_flat_ch661_back.da4

## 1900_flat_ch661_back

**DUT: E-GSM900/GSM1800/GSM1900 Triple Band GPRS Terminal Equipment; Type: -;**
**Serial: INNO 89**
**Program: PCS 1900**

Communication System: GSM 1900; Frequency: 1880 MHz;Duty Cycle: 1:8
Medium: Muscle 1900 MHz ($\sigma$ = 1.53533 mho/m, $\varepsilon_r$ = 51.3967, $\rho$ = 1000 kg/m$^3$)
Phantom section: Flat Section

DASY4 Configuration:

- Probe: ET3DV6 - SN1711; ConvF(5, 5, 5); Calibrated: 11/29/2002
- Sensor-Surface: 4mm (Mechanical And Optical Surface Detection)
- Electronics: DAE3 Sn522; Calibrated: 9/11/2002
- Phantom: SAM 12; Type: TP-1217; Serial: QD000P40CA
- Measurement SW: DASY4, V4.1 Build 47; Postprocessing SW: SEMCAD, V1.6 Build 115

**INNO 89/Area Scan (141x81x1):** Measurement grid: dx=10mm, dy=10mm
Reference Value = 9.86 V/m
Power Drift = -0.03 dB
Maximum value of SAR = 0.238 mW/g

**INNO 89/Zoom Scan (7x7x7)/Cube 0:** Measurement grid: dx=5mm, dy=5mm, dz=5mm
Peak SAR (extrapolated) = 0.36 W/kg
SAR(1 g) = 0.221 mW/g; SAR(10 g) = 0.132 mW/g
Reference Value = 9.86 V/m
Power Drift = -0.03 dB
Maximum value of SAR = 0.236 mW/g

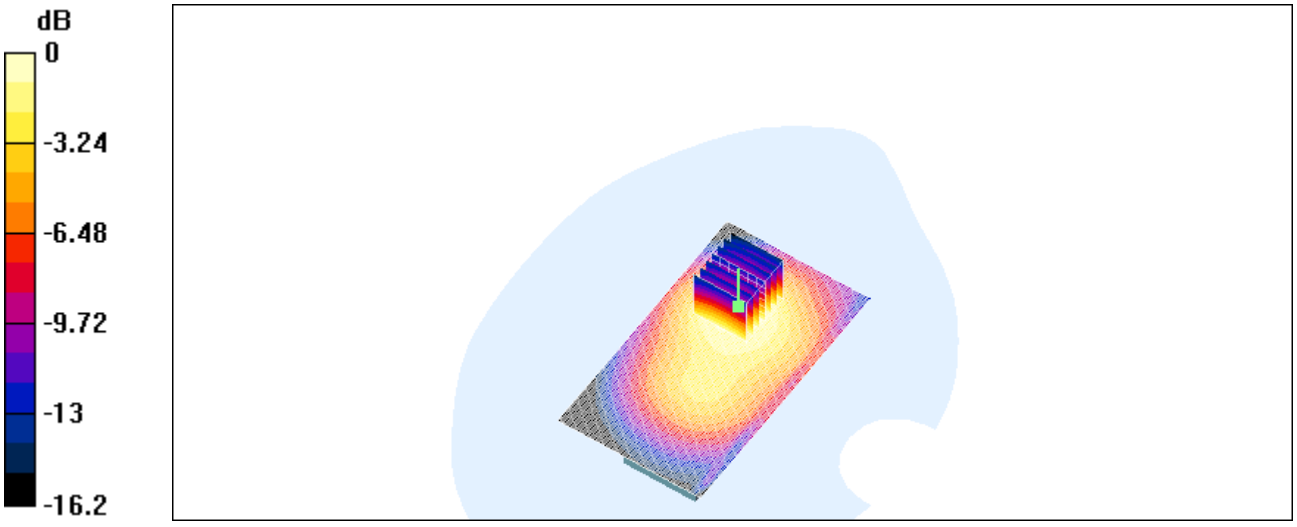


0 dB = 0.236mW/g

Date/Time: 11/20/03 06:06:43

Test Laboratory: ELECTRONIC TECHNOLOGY SYSTEMS DR. GENZ GMBH
File Name: 1900_flat_ch810_front.da4

## 1900_flat_ch810_front

**DUT: E-GSM900/GSM1800/GSM1900 Triple Band GPRS Terminal Equipment; Type: -; Serial: INNO 89**
**Program: PCS 1900**

Communication System: GSM 1900; Frequency: 1909.8 MHz;Duty Cycle: 1:8
Medium: Muscle 1800 MHz ($\sigma$ = 1.58876 mho/m, $\varepsilon_r$ = 51.863, $\rho$ = 1000 kg/m$^3$)
Phantom section: Flat Section

DASY4 Configuration:

- Probe: ET3DV6 - SN1711; ConvF(5, 5, 5); Calibrated: 11/29/2002
- Sensor-Surface: 4mm (Mechanical And Optical Surface Detection)
- Electronics: DAE3 Sn522; Calibrated: 9/11/2002
- Phantom: SAM 12; Type: TP-1217; Serial: QD000P40CA
- Measurement SW: DASY4, V4.1 Build 47; Postprocessing SW: SEMCAD, V1.6 Build 115

**INNO89/Area Scan (91x151x1):** Measurement grid: dx=10mm, dy=10mm
Reference Value = 8.04 V/m
Power Drift = -0.05 dB
Maximum value of SAR = 0.1 mW/g

**INNO89/Zoom Scan (7x7x7)/Cube 0:** Measurement grid: dx=5mm, dy=5mm, dz=5mm
Peak SAR (extrapolated) = 0.146 W/kg
SAR(1 g) = 0.0951 mW/g; SAR(10 g) = 0.0606 mW/g
Reference Value = 8.04 V/m
Power Drift = -0.05 dB
Maximum value of SAR = 0.101 mW/g

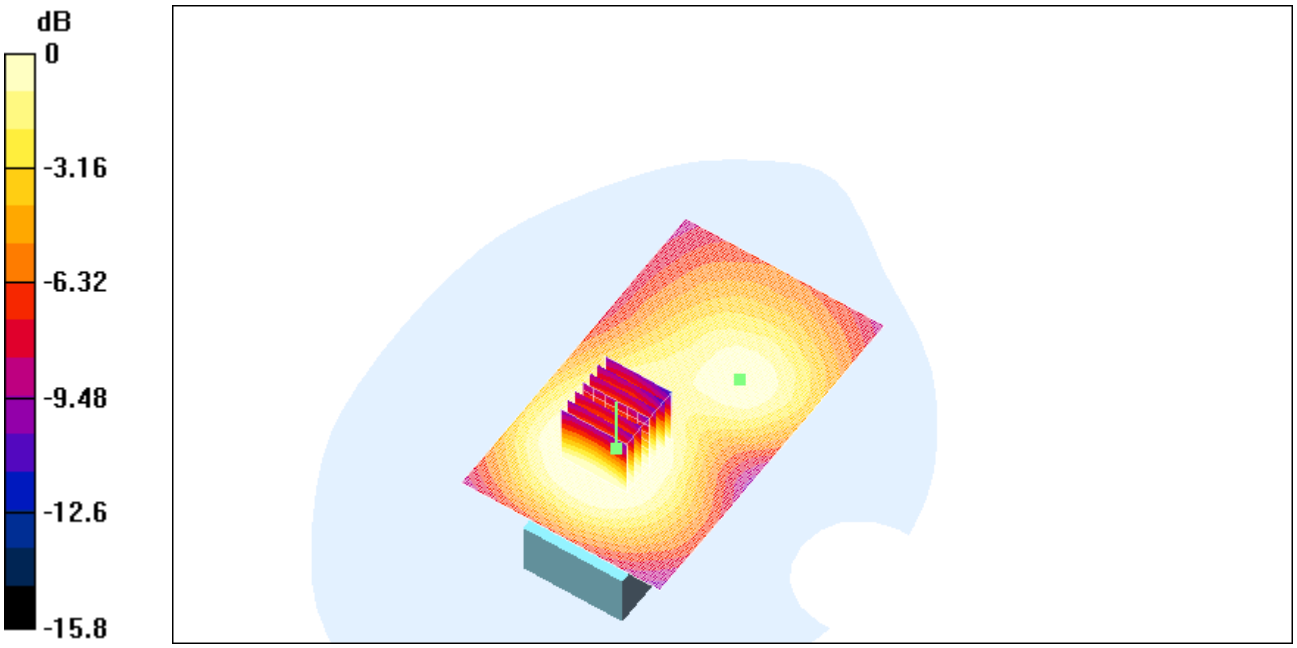


0 dB = 0.0647mW/g

Date/Time: 11/14/03 13:45:55

Test Laboratory: ELECTRONIC TECHNOLOGY SYSTEMS DR. GENZ GMBH
File Name: 1900_flat_ch810_back.da4

## 1900_flat_ch810_back

**DUT: E-GSM900/GSM1800/GSM1900 Triple Band GPRS Terminal Equipment; Type: -;**
**Serial: INNO 89**
**Program: PCS 1900**

Communication System: GSM 1900; Frequency: 1909.8 MHz;Duty Cycle: 1:8
Medium: Muscle 1900 MHz ($\sigma$ = 1.58147 mho/m, $\varepsilon_r$ = 51.4107, $\rho$ = 1000 kg/m$^3$)
Phantom section: Flat Section

DASY4 Configuration:

- Probe: ET3DV6 - SN1711; ConvF(5, 5, 5); Calibrated: 11/29/2002
- Sensor-Surface: 4mm (Mechanical And Optical Surface Detection)
- Electronics: DAE3 Sn522; Calibrated: 9/11/2002
- Phantom: SAM 12; Type: TP-1217; Serial: QD000P40CA
- Measurement SW: DASY4, V4.1 Build 47; Postprocessing SW: SEMCAD, V1.6 Build 115

**INNO 89/Area Scan (141x81x1):** Measurement grid: dx=10mm, dy=10mm
Reference Value = 10.1 V/m
Power Drift = -0.003 dB
Maximum value of SAR = 0.292 mW/g

**INNO 89/Zoom Scan (7x7x7)/Cube 0:** Measurement grid: dx=5mm, dy=5mm, dz=5mm
Peak SAR (extrapolated) = 0.454 W/kg
SAR(1 g) = 0.273 mW/g; SAR(10 g) = 0.161 mW/g
Reference Value = 10.1 V/m
Power Drift = -0.003 dB
Maximum value of SAR = 0.289 mW/g

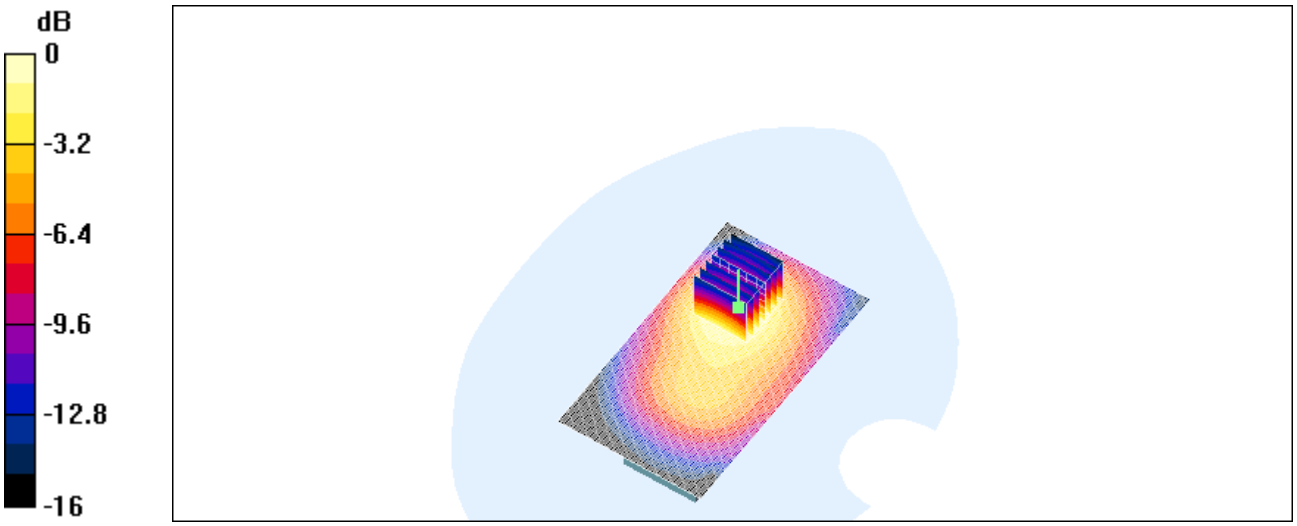


0 dB = 0.289mW/g

Date/Time: 11/22/03 11:07:03

Test Laboratory: ELECTRONIC TECHNOLOGY SYSTEMS DR. GENZ GMBH
File Name: 900_right_ch124_cheek.da4

## Z-axis scan

**DUT: E-GSM900/GSM1800/GSM1900 Triple Band GPRS Terminal Equipment; Type: -; Serial: INNO 89**
**Program: EGSM 900**

Communication System: EGSM 900; Frequency: 914.8 MHz;Duty Cycle: 1:8.3
Medium: Head 900 MHz ($\sigma$ = 0.961851 mho/m, $\varepsilon_r$ = 41.2463, $\rho$ = 1000 kg/m$^3$)
Phantom section: Right Section

DASY4 Configuration:

- Probe: ET3DV6 - SN1711; ConvF(6.4, 6.4, 6.4); Calibrated: 11/29/2002
- Sensor-Surface: 4mm (Mechanical And Optical Surface Detection)
- Electronics: DAE3 Sn522; Calibrated: 9/11/2002
- Phantom: SAM 12; Type: TP-1217; Serial: QD000P40CA
- Measurement SW: DASY4, V4.1 Build 47; Postprocessing SW: SEMCAD, V1.6 Build 115

**INNO89/Area Scan (91x151x1):** Measurement grid: dx=10mm, dy=10mm
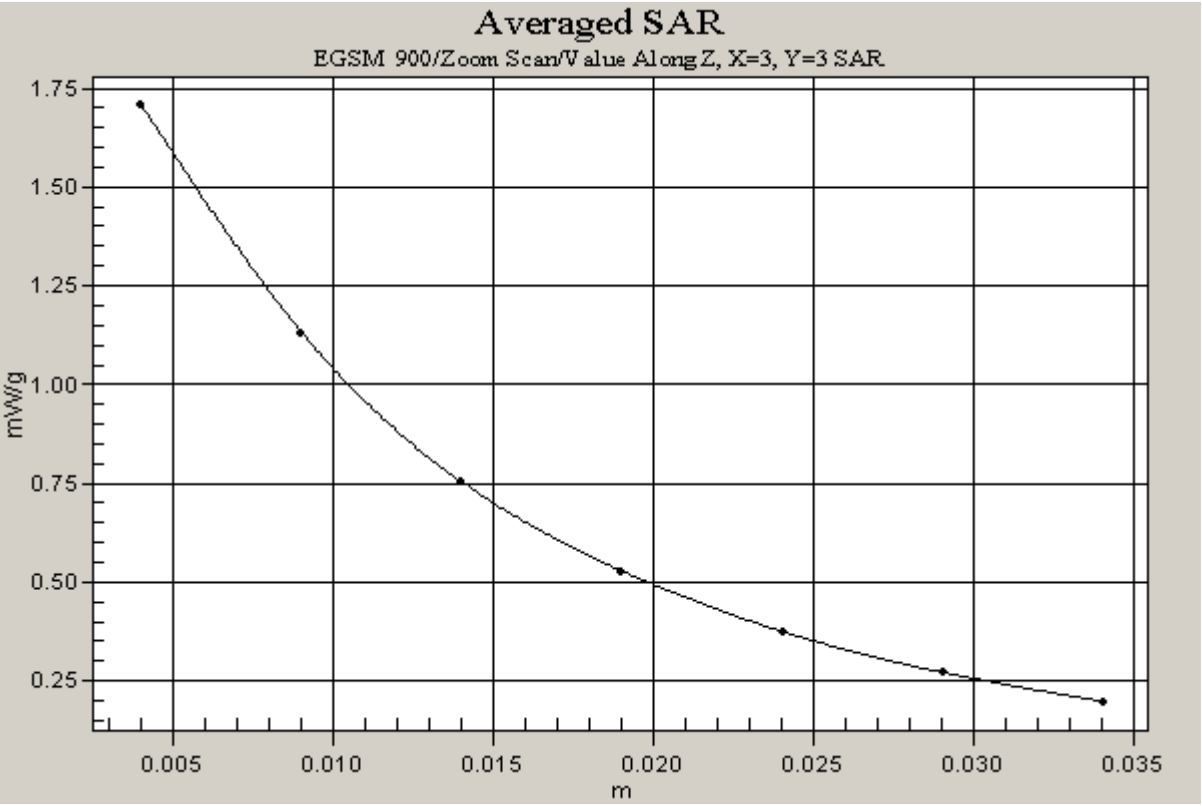
**INNO89/Zoom Scan (7x7x7)/Cube 0:** Measurement grid: dx=5mm, dy=5mm, dz=5mm
Peak SAR (extrapolated) = 2.4 W/kg
SAR(1 g) = 1.58 mW/g; SAR(10 g) = 0.986 mW/g
Reference Value = 15.6 V/m
Power Drift = -0.004 dB
Maximum value of SAR = 1.71 mW/g