Date/Time: 02/19/04 17:05:29

Test Laboratory: ELECTRONIC TECHNOLOGY SYSTEMS DR. GENZ GMBH

1900_right_ch512_cheek

DUT: E-GSM850/GSM1900 Dual Band GPRS Terminal Equipment; Type: -; Serial: INNO 98

Communication System: GSM 1900; Frequency: 1850.2 MHz;Duty Cycle: 1:8.3
Medium: Head 1900 MHz Medium parameters used (interpolated): f = 1850.2 MHz; σ = 1.37 mho/m; ε_r = 39.9; ρ = 1000 kg/m^3
Phantom section: Right Section

DASY4 Configuration:

- Probe: ET3DV6 - SN1711; ConvF(5.2, 5.2, 5.2); Calibrated: 12/16/2003
- Sensor-Surface: 4mm (Mechanical And Optical Surface Detection)
- Electronics: DAE3 Sn522; Calibrated: 1/12/2004
- Phantom: SAM 12; Type: TP-1217; Serial: QD000P40CA
- Measurement SW: DASY4, V4.2 Build 12; Postprocessing SW: SEMCAD, V1.8 Build 93

INNO98/Area Scan (81x141x1): Measurement grid: dx=10mm, dy=10mm
Reference Value = 4.86 V/m
Power Drift = -0.0 dB
Maximum value of SAR = 0.534 mW/g

INNO98/Zoom Scan (7x7x7)/Cube 0: Measurement grid: dx=5mm, dy=5mm, dz=5mm
Peak SAR (extrapolated) = 0.771 W/kg
SAR(1 g) = 0.476 mW/g; SAR(10 g) = 0.263 mW/g
Reference Value = 4.86 V/m
Power Drift = -0.0 dB
Maximum value of SAR = 0.541 mW/g

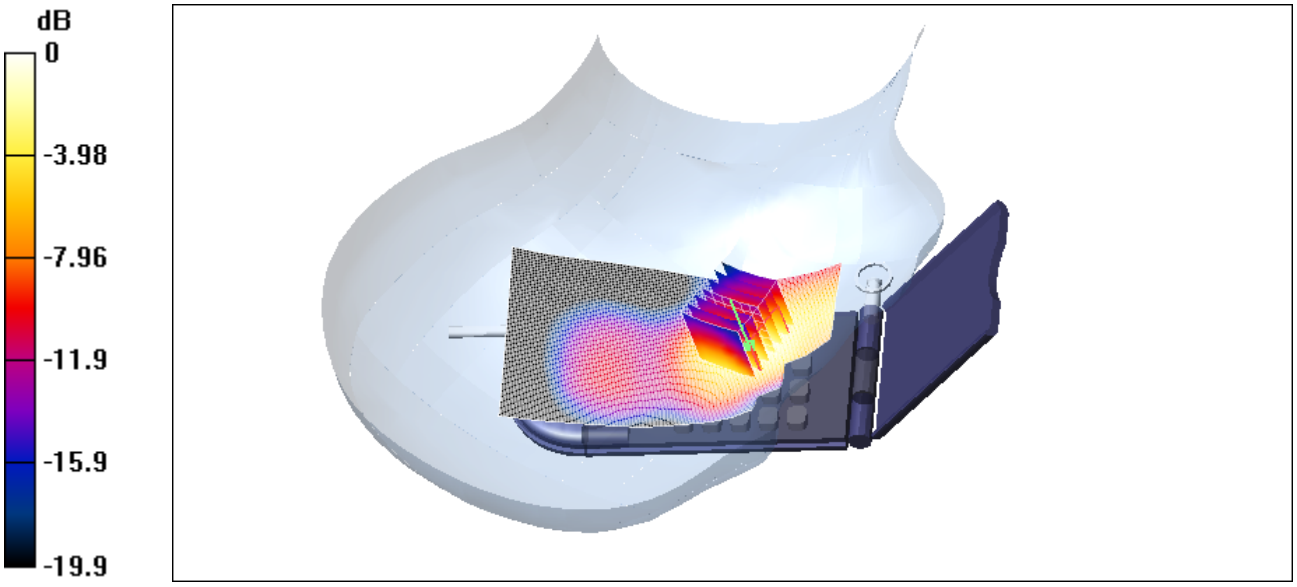

0 dB = 0.541mW/g

Date/Time: 02/19/04 14:17:02

Test Laboratory: ELECTRONIC TECHNOLOGY SYSTEMS DR. GENZ GMBH

1900_right_ch661_cheek

DUT: E-GSM850/GSM1900 Dual Band GPRS Terminal Equipment; Type: -; Serial: INNO 98

Communication System: GSM 1900; Frequency: 1880 MHz;Duty Cycle: 1:8.3
Medium: Head 1900 MHz Medium parameters used: f = 1880 MHz; σ = 1.4 mho/m; ε_r = 39.9; ρ = 1000 kg/m^3
Phantom section: Right Section

DASY4 Configuration:

- Probe: ET3DV6 - SN1711; ConvF(5.2, 5.2, 5.2); Calibrated: 12/16/2003
- Sensor-Surface: 4mm (Mechanical And Optical Surface Detection)
- Electronics: DAE3 Sn522; Calibrated: 1/12/2004
- Phantom: SAM 12; Type: TP-1217; Serial: QD000P40CA
- Measurement SW: DASY4, V4.2 Build 12; Postprocessing SW: SEMCAD, V1.8 Build 93

INNO98/Area Scan (81x141x1): Measurement grid: dx=10mm, dy=10mm
Reference Value = 4.81 V/m
Power Drift = 0.0 dB
Maximum value of SAR = 0.540 mW/g

INNO98/Zoom Scan (7x7x7)/Cube 0: Measurement grid: dx=5mm, dy=5mm, dz=5mm
Peak SAR (extrapolated) = 0.773 W/kg
SAR(1 g) = 0.483 mW/g; SAR(10 g) = 0.268 mW/g
Reference Value = 4.81 V/m
Power Drift = 0.0 dB
Maximum value of SAR = 0.551 mW/g

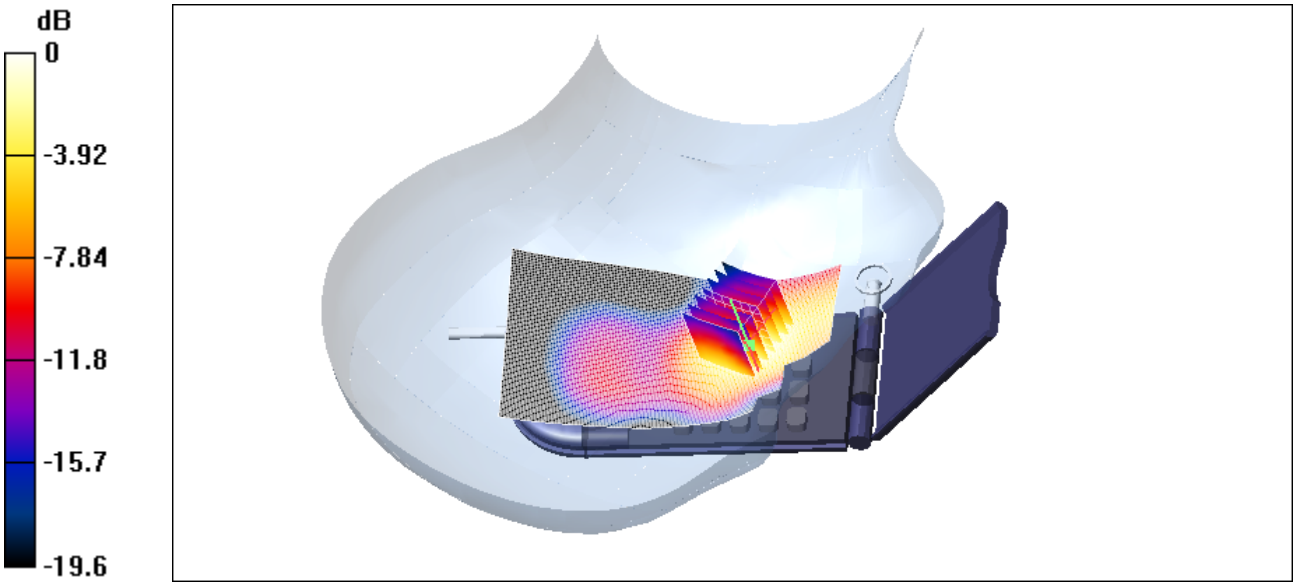

0 dB = 0.551mW/g

Date/Time: 02/19/04 14:56:41

Test Laboratory: ELECTRONIC TECHNOLOGY SYSTEMS DR. GENZ GMBH

1900_right_ch661_tilted

DUT: E-GSM850/GSM1900 Dual Band GPRS Terminal Equipment; Type: -; Serial: INNO 98

Communication System: GSM 1900; Frequency: 1880 MHz;Duty Cycle: 1:8.3
Medium: Head 1900 MHz Medium parameters used: f = 1880 MHz; σ = 1.4 mho/m; ε_r = 39.9; ρ = 1000 kg/m^3
Phantom section: Right Section

DASY4 Configuration:

- Probe: ET3DV6 - SN1711; ConvF(5.2, 5.2, 5.2); Calibrated: 12/16/2003
- Sensor-Surface: 4mm (Mechanical And Optical Surface Detection)
- Electronics: DAE3 Sn522; Calibrated: 1/12/2004
- Phantom: SAM 12; Type: TP-1217; Serial: QD000P40CA
- Measurement SW: DASY4, V4.2 Build 12; Postprocessing SW: SEMCAD, V1.8 Build 93

INNO98/Area Scan (81x141x1): Measurement grid: dx=10mm, dy=10mm
Reference Value = 5.61 V/m
Power Drift = 0.005 dB
Maximum value of SAR = 0.069 mW/g

INNO98/Zoom Scan (7x7x7)/Cube 0: Measurement grid: dx=5mm, dy=5mm, dz=5mm
Peak SAR (extrapolated) = 0.098 W/kg
SAR(1 g) = 0.063 mW/g; SAR(10 g) = 0.038 mW/g
Reference Value = 5.61 V/m
Power Drift = 0.005 dB
Maximum value of SAR = 0.068 mW/g

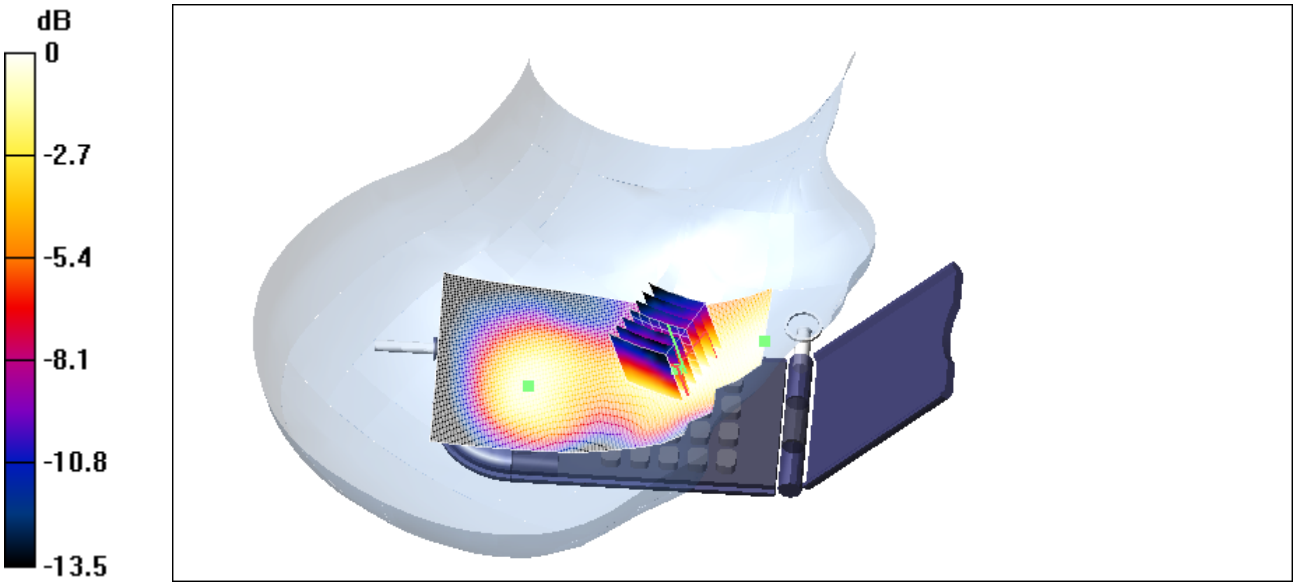

0 dB = 0.059mW/g

Date/Time: 02/19/04 17:39:45

Test Laboratory: ELECTRONIC TECHNOLOGY SYSTEMS DR. GENZ GMBH

1900_right_ch810_cheek

DUT: E-GSM850/GSM1900 Dual Band GPRS Terminal Equipment; Type: -; Serial: INNO 98

Communication System: GSM 1900; Frequency: 1909.8 MHz;Duty Cycle: 1:8.3
Medium: Head 1900 MHz Medium parameters used (interpolated): f = 1909.8 MHz; σ = 1.43 mho/m; ε_r = 39.8; ρ = 1000 kg/m^3
Phantom section: Right Section

DASY4 Configuration:

- Probe: ET3DV6 - SN1711; ConvF(5.2, 5.2, 5.2); Calibrated: 12/16/2003
- Sensor-Surface: 4mm (Mechanical And Optical Surface Detection)
- Electronics: DAE3 Sn522; Calibrated: 1/12/2004
- Phantom: SAM 12; Type: TP-1217; Serial: QD000P40CA
- Measurement SW: DASY4, V4.2 Build 12; Postprocessing SW: SEMCAD, V1.8 Build 93

INNO98/Area Scan (81x141x1): Measurement grid: dx=10mm, dy=10mm
Reference Value = 4.88 V/m
Power Drift = -0.0 dB
Maximum value of SAR = 0.593 mW/g

INNO98/Zoom Scan (7x7x7)/Cube 0: Measurement grid: dx=5mm, dy=5mm, dz=5mm
Peak SAR (extrapolated) = 0.857 W/kg
SAR(1 g) = 0.525 mW/g; SAR(10 g) = 0.286 mW/g
Reference Value = 4.88 V/m
Power Drift = -0.0 dB
Maximum value of SAR = 0.601 mW/g

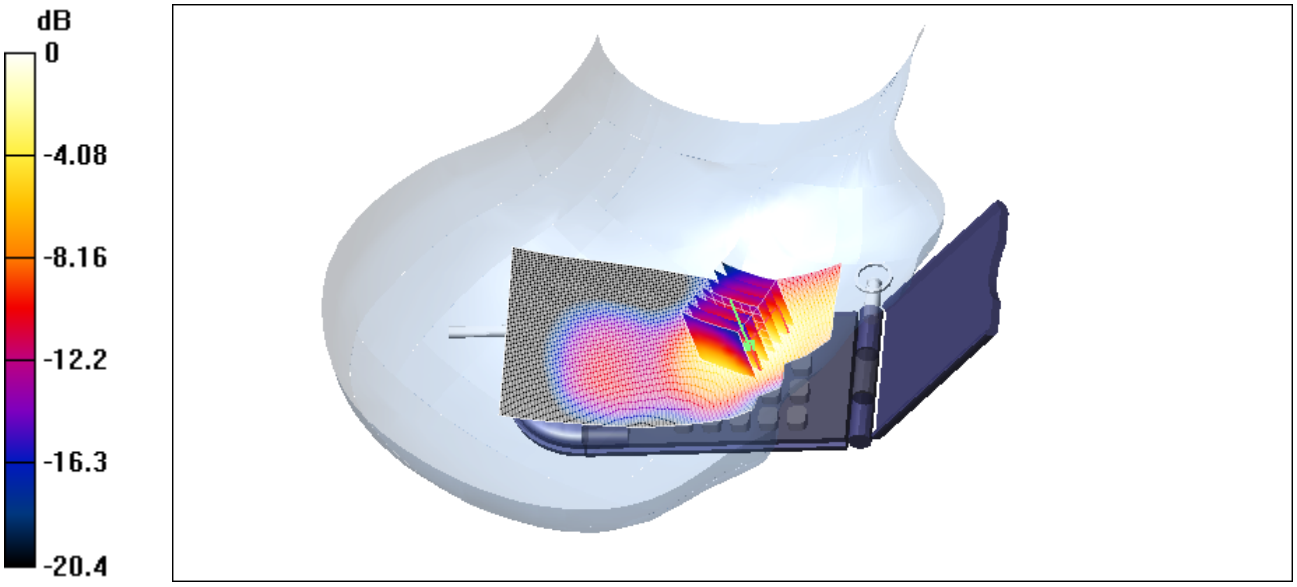

0 dB = 0.601mW/g

Date/Time: 02/19/04 15:44:46

Test Laboratory: ELECTRONIC TECHNOLOGY SYSTEMS DR. GENZ GMBH

1900_left_ch661_cheek

DUT: E-GSM850/GSM1900 Dual Band GPRS Terminal Equipment; Type: -; Serial: INNO 98

Communication System: GSM 1900; Frequency: 1880 MHz;Duty Cycle: 1:8.3
Medium: Head 1900 MHz Medium parameters used: f = 1880 MHz; σ = 1.4 mho/m; ε_r = 39.9; ρ = 1000 kg/m^3
Phantom section: Left Section

DASY4 Configuration:

- Probe: ET3DV6 - SN1711; ConvF(5.2, 5.2, 5.2); Calibrated: 12/16/2003
- Sensor-Surface: 4mm (Mechanical And Optical Surface Detection)
- Electronics: DAE3 Sn522; Calibrated: 1/12/2004
- Phantom: SAM 12; Type: TP-1217; Serial: QD000P40CA
- Measurement SW: DASY4, V4.2 Build 12; Postprocessing SW: SEMCAD, V1.8 Build 93

INNO98/Area Scan (81x141x1): Measurement grid: dx=10mm, dy=10mm
Reference Value = 5.11 V/m
Power Drift = 0.0 dB
Maximum value of SAR = 0.445 mW/g

INNO98/Zoom Scan (7x7x7)/Cube 0: Measurement grid: dx=5mm, dy=5mm, dz=5mm
Peak SAR (extrapolated) = 0.684 W/kg
SAR(1 g) = 0.419 mW/g; SAR(10 g) = 0.239 mW/g
Reference Value = 5.11 V/m
Power Drift = 0.0 dB
Maximum value of SAR = 0.457 mW/g

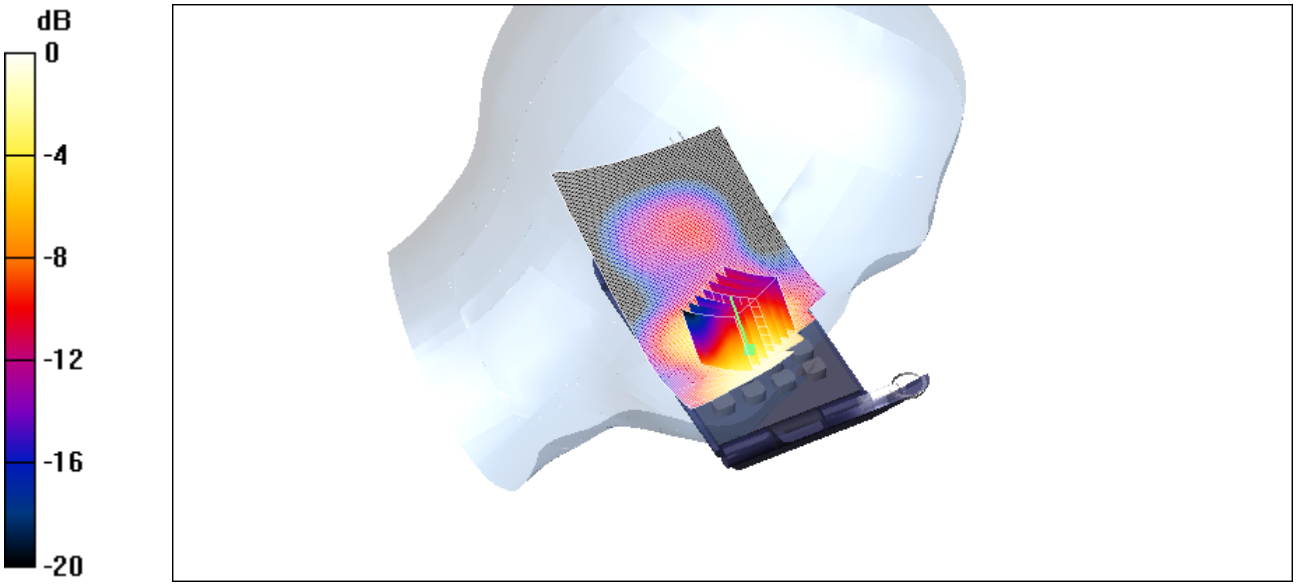

0 dB = 0.457mW/g

Date/Time: 02/19/04 16:19:13

Test Laboratory: ELECTRONIC TECHNOLOGY SYSTEMS DR. GENZ GMBH

1900_left_ch661_tilted

DUT: E-GSM850/GSM1900 Dual Band GPRS Terminal Equipment; Type: -; Serial: INNO 98

Communication System: GSM 1900; Frequency: 1880 MHz;Duty Cycle: 1:8.3
Medium: Head 1900 MHz Medium parameters used: f = 1880 MHz; σ = 1.4 mho/m; ε_r = 39.9; ρ = 1000 kg/m^3
Phantom section: Left Section

DASY4 Configuration:

- Probe: ET3DV6 - SN1711; ConvF(5.2, 5.2, 5.2); Calibrated: 12/16/2003
- Sensor-Surface: 4mm (Mechanical And Optical Surface Detection)
- Electronics: DAE3 Sn522; Calibrated: 1/12/2004
- Phantom: SAM 12; Type: TP-1217; Serial: QD000P40CA
- Measurement SW: DASY4, V4.2 Build 12; Postprocessing SW: SEMCAD, V1.8 Build 93

INNO98/Area Scan (81x141x1): Measurement grid: dx=10mm, dy=10mm
Reference Value = 6.16 V/m
Power Drift = -0.0 dB
Maximum value of SAR = 0.072 mW/g

INNO98/Zoom Scan (7x7x7)/Cube 0: Measurement grid: dx=5mm, dy=5mm, dz=5mm
Peak SAR (extrapolated) = 0.099 W/kg
SAR(1 g) = 0.067 mW/g; SAR(10 g) = 0.044 mW/g
Reference Value = 6.16 V/m
Power Drift = -0.0 dB
Maximum value of SAR = 0.071 mW/g

0 dB = 0.063mW/g

Date/Time: 02/19/04 21:40:19

Test Laboratory: ELECTRONIC TECHNOLOGY SYSTEMS DR. GENZ GMBH

1900_flat_ch512_back

DUT: E-GSM850/GSM1900 Dual Band GPRS Terminal Equipment; Type: -; Serial: INNO 98

Communication System: GSM 1900; Frequency: 1850.2 MHz;Duty Cycle: 1:8.3
Medium: Muscle 1900 MHz Medium parameters used (interpolated): f = 1850.2 MHz; σ = 1.52 mho/m; ε_r = 51.9; ρ = 1000 kg/m^3
Phantom section: Flat Section

DASY4 Configuration:

- Probe: ET3DV6 - SN1711; ConvF(4.6, 4.6, 4.6); Calibrated: 12/16/2003
- Sensor-Surface: 4mm (Mechanical And Optical Surface Detection)
- Electronics: DAE3 Sn522; Calibrated: 1/12/2004
- Phantom: SAM 12; Type: TP-1217; Serial: QD000P40CA
- Measurement SW: DASY4, V4.2 Build 12; Postprocessing SW: SEMCAD, V1.8 Build 93

INNO98/Area Scan (91x141x1): Measurement grid: dx=10mm, dy=10mm
Reference Value = 7.66 V/m
Power Drift = 0.002 dB
Maximum value of SAR = 0.132 mW/g

INNO98/Zoom Scan (7x7x7)/Cube 0: Measurement grid: dx=5mm, dy=5mm, dz=5mm
Peak SAR (extrapolated) = 0.192 W/kg
SAR(1 g) = 0.124 mW/g; SAR(10 g) = 0.078 mW/g
Reference Value = 7.66 V/m
Power Drift = 0.002 dB
Maximum value of SAR = 0.133 mW/g

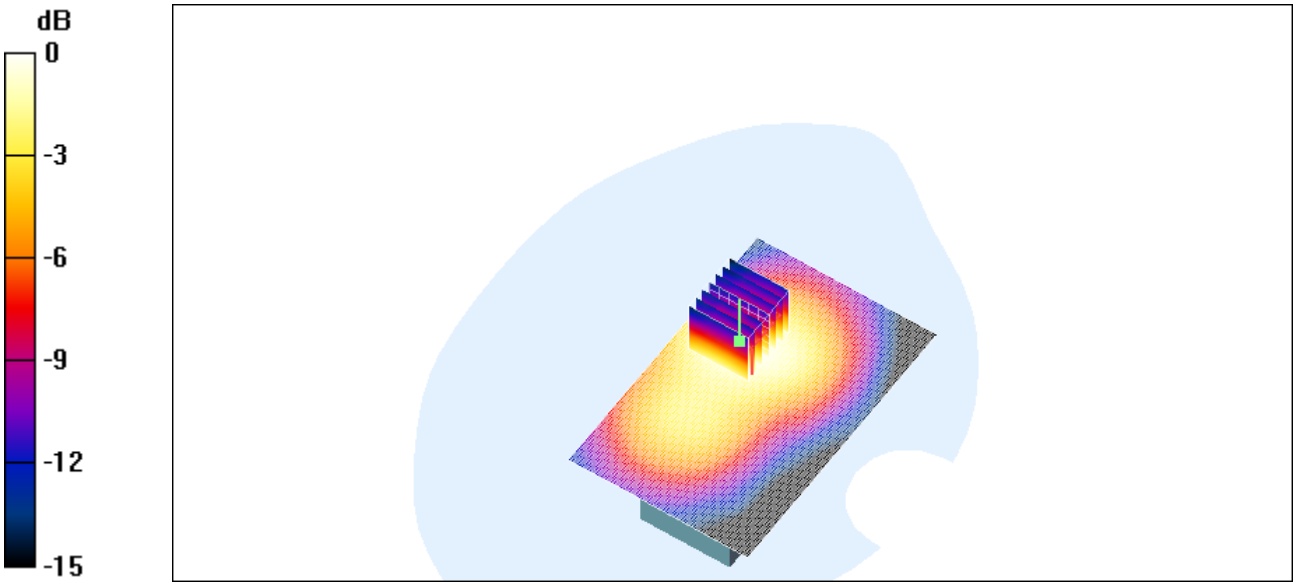

0 dB = 0.133mW/g

Date/Time: 02/19/04 19:26:49

Test Laboratory: ELECTRONIC TECHNOLOGY SYSTEMS DR. GENZ GMBH

1900_flat_ch661_front

DUT: E-GSM850/GSM1900 Dual Band GPRS Terminal Equipment; Type: -; Serial: INNO 98

Communication System: GSM 1900; Frequency: 1880 MHz;Duty Cycle: 1:8.3
Medium: Muscle 1900 MHz Medium parameters used: f = 1880 MHz; σ = 1.55 mho/m; ε_r = 51.9; ρ = 1000 kg/m^3
Phantom section: Flat Section

DASY4 Configuration:

- Probe: ET3DV6 - SN1711; ConvF(4.6, 4.6, 4.6); Calibrated: 12/16/2003
- Sensor-Surface: 4mm (Mechanical And Optical Surface Detection)
- Electronics: DAE3 Sn522; Calibrated: 1/12/2004
- Phantom: SAM 12; Type: TP-1217; Serial: QD000P40CA
- Measurement SW: DASY4, V4.2 Build 12; Postprocessing SW: SEMCAD, V1.8 Build 93

INNO98/Area Scan (91x141x1): Measurement grid: dx=10mm, dy=10mm
Reference Value = 5.81 V/m
Power Drift = -0.0 dB
Maximum value of SAR = 0.049 mW/g

INNO98/Zoom Scan (7x7x7)/Cube 0: Measurement grid: dx=5mm, dy=5mm, dz=5mm
Peak SAR (extrapolated) = 0.068 W/kg
SAR(1 g) = 0.045 mW/g; SAR(10 g) = 0.029 mW/g
Reference Value = 5.81 V/m
Power Drift = -0.0 dB
Maximum value of SAR = 0.048 mW/g

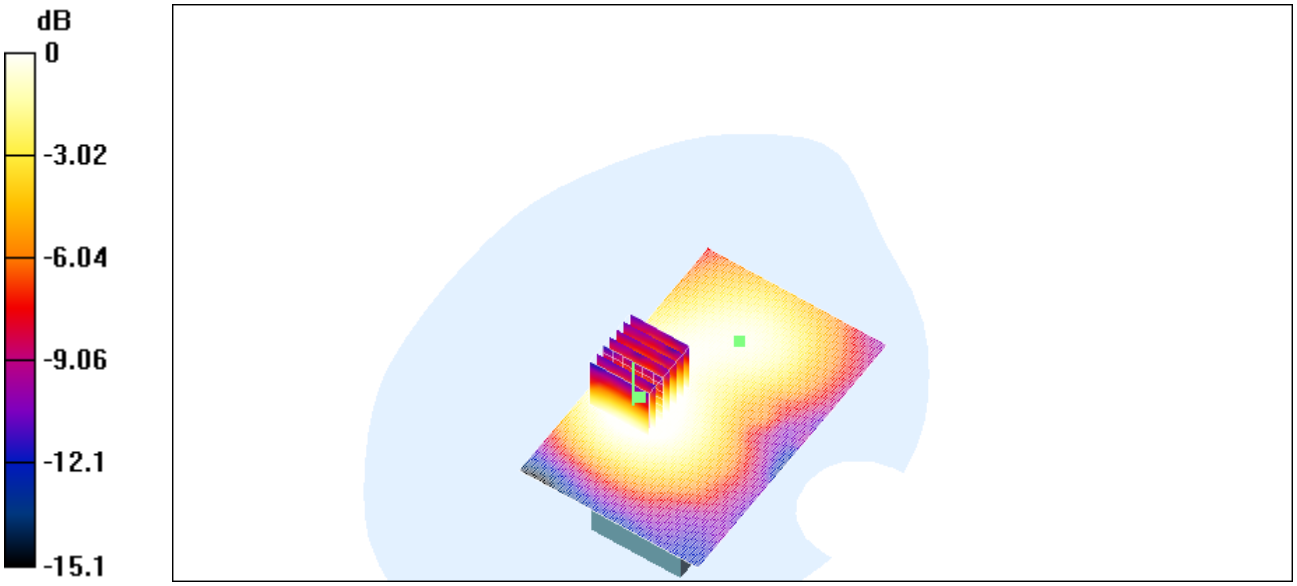

0 dB = 0.035mW/g

Date/Time: 02/20/04 06:47:21

Test Laboratory: ELECTRONIC TECHNOLOGY SYSTEMS DR. GENZ GMBH

1900_flat_ch661_back

DUT: E-GSM850/GSM1900 Dual Band GPRS Terminal Equipment; Type: -; Serial: INNO 98

Communication System: GSM 1900; Frequency: 1880 MHz;Duty Cycle: 1:8.3
Medium: Muscle 1900 MHz Medium parameters used: f = 1880 MHz; σ = 1.55 mho/m; ε_r = 51.9; ρ = 1000 kg/m^3
Phantom section: Flat Section

DASY4 Configuration:

- Probe: ET3DV6 - SN1711; ConvF(4.6, 4.6, 4.6); Calibrated: 12/16/2003
- Sensor-Surface: 4mm (Mechanical And Optical Surface Detection)
- Electronics: DAE3 Sn522; Calibrated: 1/12/2004
- Phantom: SAM 12; Type: TP-1217; Serial: QD000P40CA
- Measurement SW: DASY4, V4.2 Build 12; Postprocessing SW: SEMCAD, V1.8 Build 93

INNO98/Area Scan (91x141x1): Measurement grid: dx=10mm, dy=10mm
Reference Value = 7.76 V/m
Power Drift = 0.0 dB
Maximum value of SAR = 0.124 mW/g

INNO98/Zoom Scan (7x7x7)/Cube 0: Measurement grid: dx=5mm, dy=5mm, dz=5mm
Peak SAR (extrapolated) = 0.192 W/kg
SAR(1 g) = 0.115 mW/g; SAR(10 g) = 0.068 mW/g
Reference Value = 7.76 V/m
Power Drift = 0.0 dB
Maximum value of SAR = 0.124 mW/g

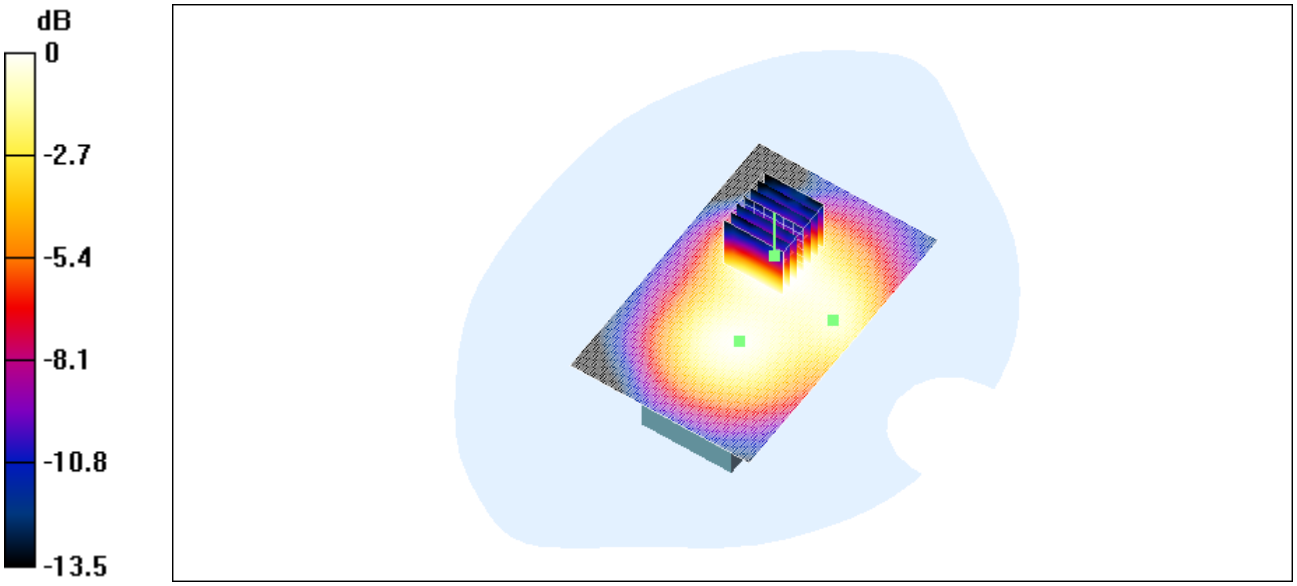

0 dB = 0.102mW/g

Date/Time: 02/20/04 06:29:24

Test Laboratory: ELECTRONIC TECHNOLOGY SYSTEMS DR. GENZ GMBH

1900_flat_ch810_back

DUT: E-GSM850/GSM1900 Dual Band GPRS Terminal Equipment; Type: -; Serial: INNO 98

Communication System: GSM 1900; Frequency: 1909.8 MHz;Duty Cycle: 1:8.3
Medium: Muscle 1900 MHz Medium parameters used (interpolated): f = 1909.8 MHz; σ = 1.59 mho/m; ε_r = 51.9; ρ = 1000 kg/m^3
Phantom section: Flat Section

DASY4 Configuration:

- Probe: ET3DV6 - SN1711; ConvF(4.6, 4.6, 4.6); Calibrated: 12/16/2003
- Sensor-Surface: 4mm (Mechanical And Optical Surface Detection)
- Electronics: DAE3 Sn522; Calibrated: 1/12/2004
- Phantom: SAM 12; Type: TP-1217; Serial: QD000P40CA
- Measurement SW: DASY4, V4.2 Build 12; Postprocessing SW: SEMCAD, V1.8 Build 93

INNO98/Area Scan (91x141x1): Measurement grid: dx=10mm, dy=10mm
Reference Value = 7.83 V/m
Power Drift = 0.0 dB
Maximum value of SAR = 0.158 mW/g

INNO98/Zoom Scan (7x7x7)/Cube 0: Measurement grid: dx=5mm, dy=5mm, dz=5mm
Peak SAR (extrapolated) = 0.248 W/kg
SAR(1 g) = 0.146 mW/g; SAR(10 g) = 0.085 mW/g
Reference Value = 7.83 V/m
Power Drift = 0.0 dB
Maximum value of SAR = 0.160 mW/g

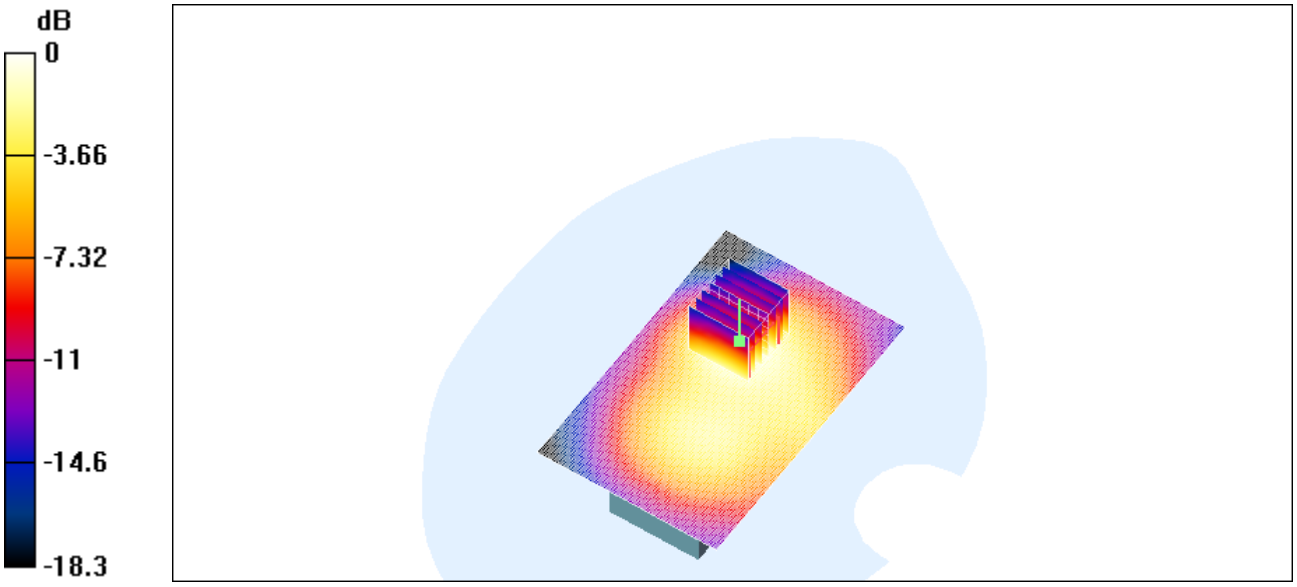

0 dB = 0.160mW/g

Date/Time: 02/19/04 17:39:45

Test Laboratory: ELECTRONIC TECHNOLOGY SYSTEMS DR. GENZ GMBH

Z-axis scan - PCS 1900

DUT: E-GSM850/GSM1900 Dual Band GPRS Terminal Equipment; Type: -; Serial: INNO 98

Communication System: GSM 1900; Frequency: 1909.8 MHz;Duty Cycle: 1:8.3
Medium: Head 1900 MHz Medium parameters used (interpolated): f = 1909.8 MHz; σ = 1.43 mho/m; ε_r = 39.8; ρ = 1000 kg/m^3
Phantom section: Right Section

DASY4 Configuration:

- Probe: ET3DV6 - SN1711; ConvF(5.2, 5.2, 5.2); Calibrated: 12/16/2003
- Sensor-Surface: 4mm (Mechanical And Optical Surface Detection)
- Electronics: DAE3 Sn522; Calibrated: 1/12/2004
- Phantom: SAM 12; Type: TP-1217; Serial: QD000P40CA
- Measurement SW: DASY4, V4.2 Build 12; Postprocessing SW: SEMCAD, V1.8 Build 93

INNO98/Area Scan (81x141x1): Measurement grid: dx=10mm, dy=10mm
Reference Value = 4.88 V/m
Power Drift = -0.0 dB
Maximum value of SAR = 0.593 mW/g
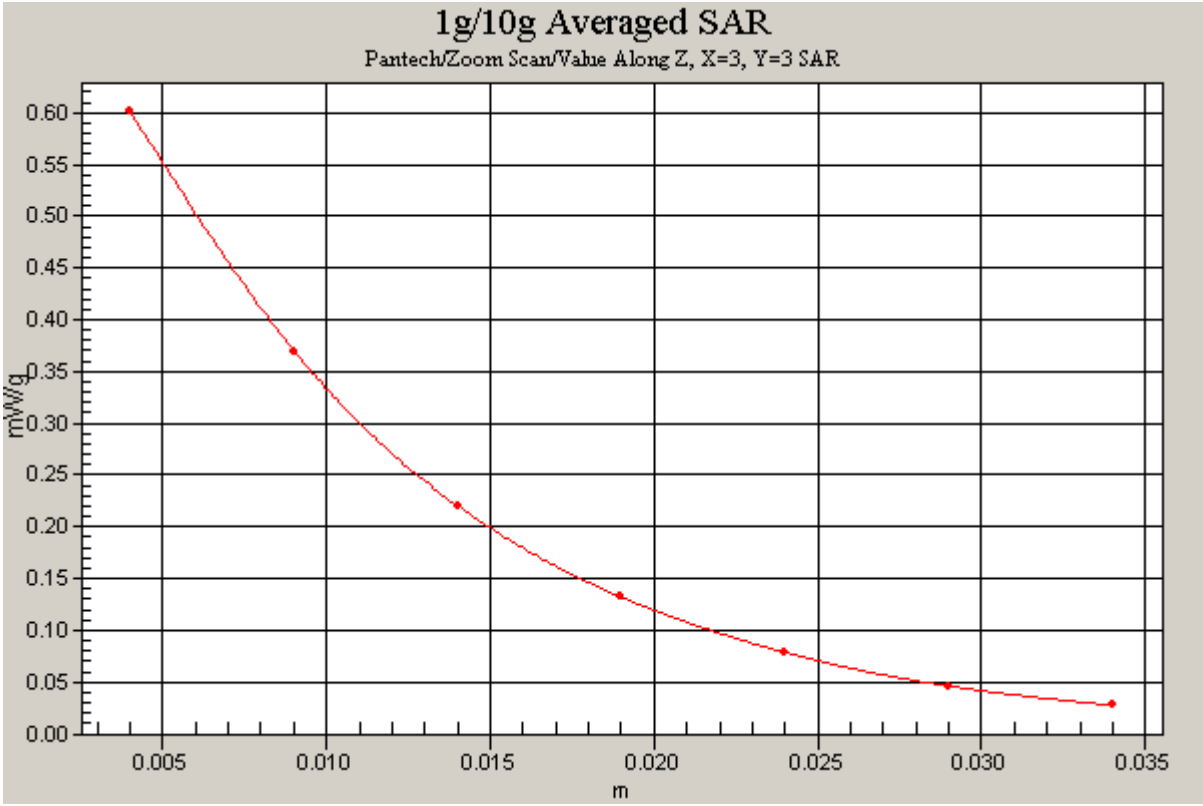
INNO98/Zoom Scan (7x7x7)/Cube 0: Measurement grid: dx=5mm, dy=5mm, dz=5mm
Peak SAR (extrapolated) = 0.857 W/kg
SAR(1 g) = 0.525 mW/g; SAR(10 g) = 0.286 mW/g
Reference Value = 4.88 V/m
Power Drift = -0.0 dB
Maximum value of SAR = 0.601 mW/g