Parts List

The packing unit should include the following items:

① Compenser™
② Cable for Connection to Hands-Free-Car Kit (5m/16.5ft.)
③ Adapter for Connection to Antenna (10cm/4 in)
④ Power Supply Cable (3 Wires with a Plug)
⑤ 4 Fixing Screws

- Installation Manual
- Installation Report
- Registration and Warranty Card
- RAYTEL LLC Limited Warranty Policy

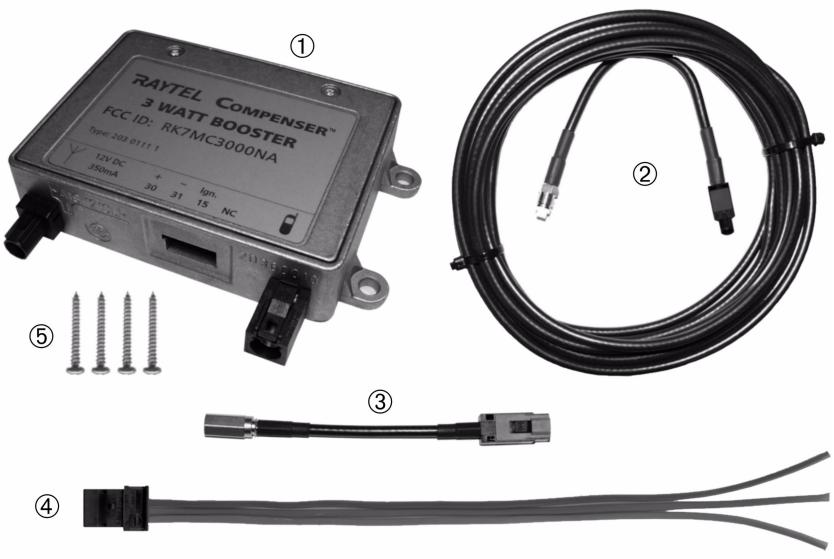

Figure 1

Safety Precautions

Improper Installation:

The installation of the COMPENSER™ requires special knowledge, abilities and tools. Improper installation may cause damage to the unit or to the vehicle! We therefore strongly recommend having the installation done by a professional installer.

Personal Injury:

Inappropriate places for the installation of the COMPENSER™ may cause personal injury in accidents or may disable the safety equipment of the vehicle! Note the directions in the chapter Installation! When removing coverings or dashboard parts, sharp tools may cause personal injuries or material damage. Use adequate tools and remove parts carefully. Don't nick, cut or pull existing car wiring harnesses.

Damage to Insulation of Wires:

Damaged insulation on any wire of the existing vehicle wiring or the wiring of the COMPENSER™ system may cause damage to the unit, damage to the electrical system of the vehicle, and may cause short circuiting and fire. All wires should not be pinched or nicked and should be properly fixed to avoid any tensile stress or possible damage by chafing!

Damage by Polarity Reversal or Short-Circuit:

Incorrectly connected wires may cause a polarity reversal or short-circuit. This will result in severe damage to the equipment. It is essential to disconnect the car battery before beginning the electrical installation of the COMPENSER™!

THE RAYTEL LLC LIMITED WARRANTY IS VOID UNLESS THE COMPENSER™ IS INSTALLED BY A QUALIFIED PROFESSIONAL INSTALLER.

Damage of Car Components:

Drilling holes or using self-tapping screws when mounting the COMPENSER™ may cause damage to important vehicle components or to the wiring.

Make sure there is enough space left behind drilling holes and screws!

Effects on the Car's Electrical System:

Although the COMPENSER™ has been designed for minimum radiation levels, improper installation of components of the system may influence the electronic equipment of the vehicle. Please note the instructions in the vehicle's owner's manual!

Damage Caused by Wrong Replacement Parts or Accessories:

Please visit RAYTEL LLC website *www.tellphone.com* for further information on replacement and accessory parts!

Proper Use:

The COMPENSER™ is to be used in cars only with a mobile phone that works in the GSM850 / GSM1900 MHz bands.

Never spill liquid of any kind on this product.

Do not disassemble this product. Take it to a qualified service center when service is required.

Functional Description

The COMPENSER™ is a bi-directional transmitting and receiving booster which compensates for all cable and plug losses which occur in the signal path between the mobile phone and the external antenna. This provides optimum call quality through optimized transmitting and receiving characteristics.

The COMPENSER™ is ready for operation when the vehicle's ignition is turned on. When there is no telephone call in progress, only the two receiving amplifiers are active. During a telephone call the two transmitting amplifiers are also active. The COMPENSER™ continues to be operational for approx. 2 hours after turning off the ignition. Only after the end of this time the COMPENSER™ switches off completely (standby); this allows continued use during short stops. In the standby mode the power consumption is minimal (< 0.1 mA), thereby sparing the car battery. When the ignition is turned on again, the COMPENSER™ is active again.

The timer function can be put out of operation by wiring the ignition connection to the permanent plus (fig. 3, terminal 30, +). The COMPENSER™ is always on then (**CAUTION!** This means constant power consumption and use of the car battery!)

Principle of operation

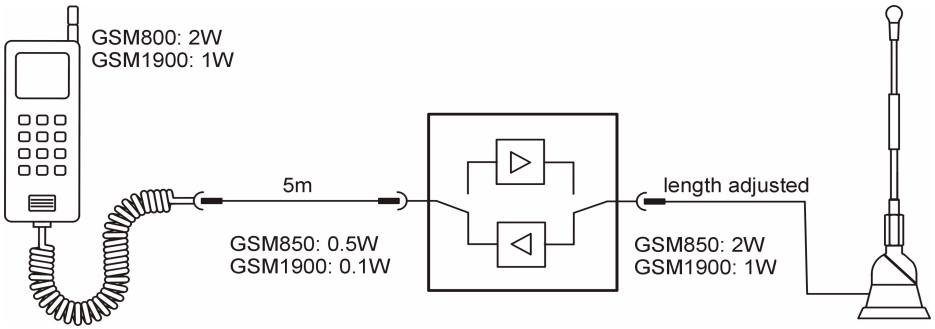

Figure 2

Installation Guide

The following installation instructions are not meant to be a guide for self installation, rather than a supporting document for the professional installer. Should you decide to install the COMPENSER™ yourself, **which will void the RAYTEL LLC Limited Warranty**, please read and follow the installation instructions very carefully and strictly observe all safety precautions.

<u>Improper Installation:</u> The installation of the COMPENSER™ requires special knowledge, abilities and tools. Improper installation may cause damage to the unit or to the vehicle! We therefore strongly recommend having the installation done by a professional installer.

Required Accessory Items and Tools

To perform the actual installation, the following tools are required:

~ Philips Screwdriver PH 1
~ Universal Pliers
~ Side-Cutting Pliers
~ Variable Speed Hand Drill
~ 3.2 mm Drill Bit (Metal)
~ 9 mm Wrench
~ Multimeter or Test Lamp
~ Vehicle Specific Tools for Removing Coverings
~ Wire Straps
~ 3 cable connector clamps

Getting Started

Before you start with the installation of the COMPENSER™ make sure that all parts as listed in the Parts List are present. In order to fully operate the COMPENSER™ you will need the following additional parts and accessories, which are available through RAYTEL LLC authorized distributors and dealers:

- Mobile Phone Antenna: An external mobile phone antenna is required for operating the COMPENSER™.

RAYTEL LLC recommends the use of its Mobile Phone Antenna which will fit to the antenna cable adapter of the COMPENSER™. Should you decide to use an existing mobile phone antenna of another brand, you may have to use an Antenna Adapter.

After having checked and made available all above mentioned required parts for the installation of the COMPENSER™, you should look at the vehicle's owner's manual for the following items:

- The vehicle's main available power source should be nominal 12 VDC with minus connected to ground.
  The COMPENSER™ operates between 11 VDC and 15 VDC.

Selecting the Mounting Position

Incorrect installation

Incorrect installation can cause damage to the appliance or vehicle. Special knowledge and skills are required to install the COMPENSER™. We recommend you to have it installed by a specialized workshop.

<u>Personal Injury:</u> Inappropriate places for the installation of the COMPENSER™ may cause personal injury in accidents or may disable the safety equipment of the vehicle! When removing coverings or dashboard parts, sharp tools may cause personal injuries or material damage. Use adequate tools and remove parts carefully. Don't nick, cut or pull existing car wiring harnesses.

<u>Damage of Car Components:</u> Drilling holes or using self tapping screws when mounting the COMPENSER™ may cause damage to important vehicle components or to the wiring. Make sure there is enough space left behind drilling holes and screws!

The COMPENSER™ should preferably be installed in the vehicle's trunk, as near as possible to the external mobile phone antenna. It is not permissible to install it in the engine compartment.

The COMPENSER™ may only be opened by authorized specialized workshops. The guarantee is void if opened by any other person. If you require service, please ask your specialized dealer or contact our customer and product support department.

Preparations

First decide on where to install the COMPENSER™, taking into consideration the safety criteria, and fitting it as close as possible to the antenna.

Now decide on the connection points for permanent plus (terminal 30, +), grounding (terminal 31, -) and ignition / switched plus (terminal 15, ignition). The connection points permanent plus and ignition must be fused here. The following fuses may be used:

- permanent plus: fuses 2 A to 5 A
- Ignition: fuses 2 A to 5 A

Put out the 3 copper wires, red, brown and blue, with cross-section 0.75 mm². The 3 wires are assigned as follows:

- red: permanent plus
- brown: ground
- blue: ignition / switched plus lead

You need cable connectors for connecting the 3 copper wires to the equivalent cables of the car wiring harness.

It is important to use the provided cable set to comply with FCC rules concerning Maximum Permissible Exposure Safety limits.
The cable between COMPENSER™ and antenna must be at least 3.3ft (1m). Please use an omnidirectional 0dBi antenna.

If the external mobile phone antenna already has an RF-cable, shorten the cable to the necessary length and crimp an FME cable jack on the open end.

If possible do not use antennas with RF cable RG 174 and suchlike as these lead to increased losses particularly with GSM 1900.

Have a size 3.2mm drill ready to bore the mounting holes. The last page of this installation manual shows a drilling template for punch-marking the mounting holes.

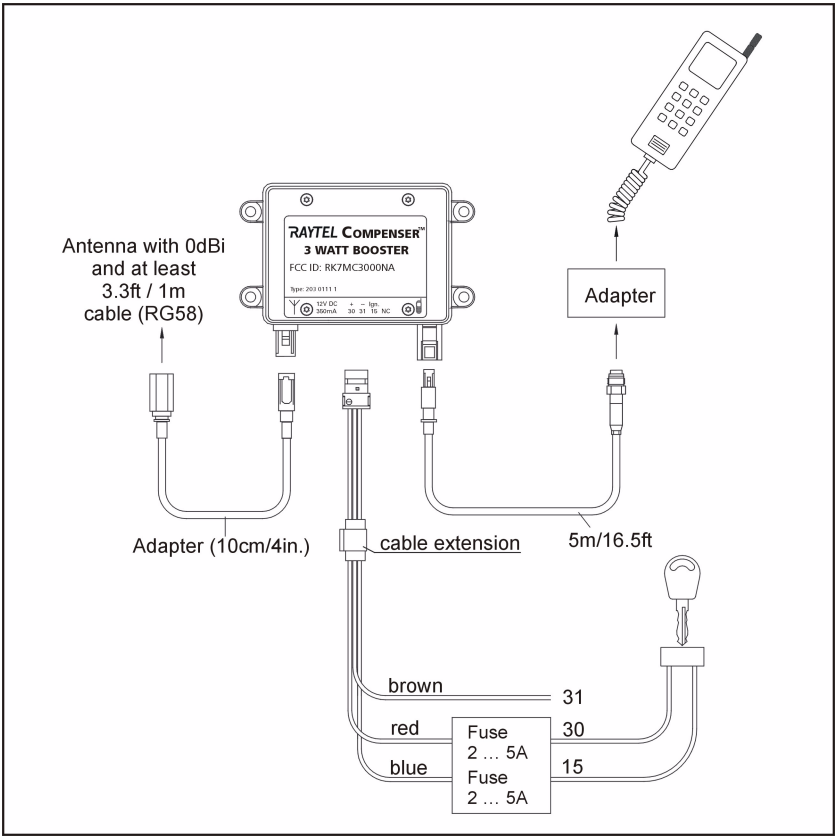

Figure 3

Installation

<u>Risk of injury:</u> Unsuitable installation locations can cause injuries during a traffic accident or render safety devices ineffective. Do not install the COMPENSER™ in the airbag's action area.

Disconnecting the minus pole in the car battery

The minus pole in the car battery must always be disconnected during work on terminals in the vehicle's electrical system. It is recommended to disconnect the minus pole during the entire installation.

The COMPENSER™ will be installed as shown in Figure 3.

First lay the (5m/16.5ft) RF cable type RG58, inserted between the mobile phone holder / hands-free kit and the COMPENSER™. Tighten the plug on both sides torque : 1 Nm/0.7ft./lb.. The telephone connection ( ) on the COMPENSER™ is to be used for this purpose.

Then plug the adapter (10cm/4in. RF cable) to the antenna connection on the COMPENSER™ ( ).

Lay the individually prepared antenna cable between the COMPENSER™ and the mobile telephone antenna and tighten the FME plug (torque: 1 Nm/0.7ft./lb.).

Now lay the three power supply wires between the COMPENSER™ and the connection points. Connect them to the cable extension and see to it that you match the colors. Then first clamp the ground wire (brown) at the defined terminal connection point (terminal 31), then the permanent plus wire (red) at the defined terminal connection point (terminal 30) and finally the ignition wire (blue) at the defined terminal connection point (terminal 15).

During this work on the terminals the car battery's minus pole must be disconnected.

Next connect the power supply cable's connector (female multipoint) to the COMPENSER™'s connector (pin panel). There must be an audible "click" when the plug snaps in. Finally screw on the COMPENSER™ with the four sheet-metal screws included and connect the minus cable to the car battery again.

Operating the COMPENSER™

Make sure the ignition is off and then use a voltmeter at the point of connection between the connection cable and the extension wires to check if the permanent plus is connected correctly.

In the event of a polarity reversal, correct the wiring. The COMPENSER™ is protected against polarity reversal; it will not be damaged in any way.

Turn on the ignition and check at the point of connection between the connection cable and the extension wires if the ignition wiring is connected correctly (+12 V between blue and brown).

Set up a mobile phone connection and check if the connection works perfectly.

Declaration of Conformity

This device complies with part 15 of the FCC rules.
Operation is subject to the following two conditions:

(1) this device may not cause harmful interference, and
(2) this device must accept any interference received, including interference that may cause undesired operation.

Support

Customer support and product assistance is available by e-mail: *support@tellphone.com*.

If you would like to speak to a RAYTEL LLC customer support representative, please call on weekdays between 9 am and 5 pm pacific time RAYTEL LLC hotline: **(858) 566-2170**. One of our customer support representatives will be glad to assist you. Be prepared to answer the following questions: which type of mobile phone you are using with your Compenser™, who installed the Compenser™ and when was it installed.

Warranty

Please refer to the separately attached RAYTEL LLC Limited Warranty.

Changes

As a result of technical progress all information and illustrations of this Installation Manual are subject to modification. RAYTEL LLC reserves all rights to changes to the product. Reprinting and reproduction, in part or in full, of this Installation Manual is not permitted without express written consent.

Drilling Template

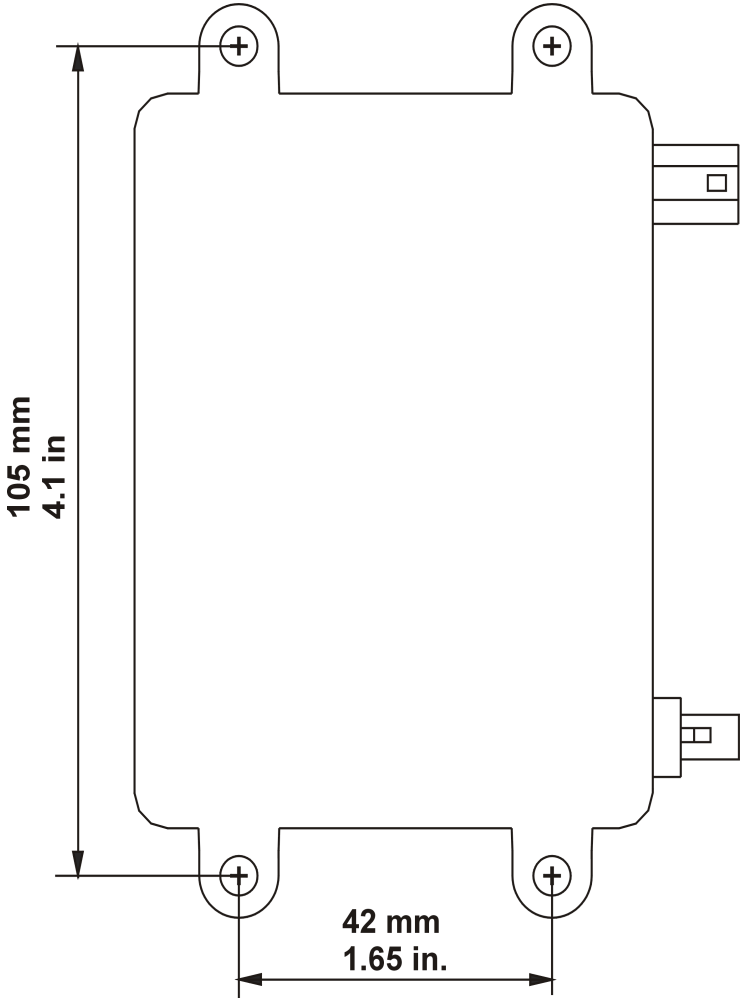

RAYTEL™

Visit us at *www.raytel-llc.com*

© RAYTEL LLC. All rights reserved. RAYTEL™ and Tellphone™ are trademarks of RAYTEL LLC.
Compenser™ is a Registered Trademark of Funkwerk Dabendorf GmbH.

Printed in Germany. Issue 02/04