front_end_R4
front_end_R4.Sch

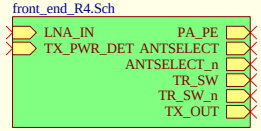

BB+MAC_R4
BB+MAC_R4.Sch

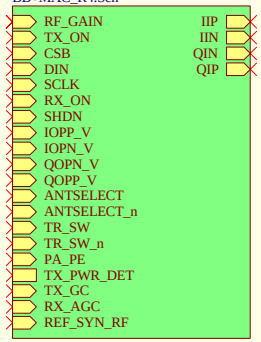

RF_R4
RF_R4.Sch

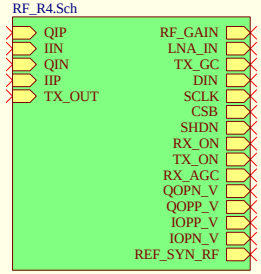

PCB Layer Stack-Up

	Material	Thickness
		Finished Total Thickness: 40mil
Top Layer - Component Side; Signal Plane	0.5oz Cu+ Gold Plating	0.0007"
	PrePreg FR4	0.006"
Mid Layer 1 - Non-Signal Ground Solid Plane	1.0oz Cu	0.0014"
	Core FR4	0.0238" (Adjustable to finish the total thickness)
Mid Layer 2 - Power/Ground Solid Plane	1.0oz Cu	0.0014"
	PrePreg FR4	0.006"
Bottom Layer - Non-Component Side; Signal Solid Plane	0.5oz Cu+ Gold Plating	0.0007"

Dieclectric Constant: 4.6
Fifty-Ohm Co-Planar Waveguide: 0.010" Line Width, 0.010" Gap Width

Title: *Reference Design of 802.11b WLAN Mini-PCI Card*		INPROCOMM
Size: A4	Model: *BM6621*	Rev: *R4*
19-Aug-2003	Sheet: 0 of 3	Drawn by:

Inprocomm, Inc.
9F,No.93 Shuei-Yuan Street
Hsinchu 300 Taiwan
www.inprocomm.com.tw

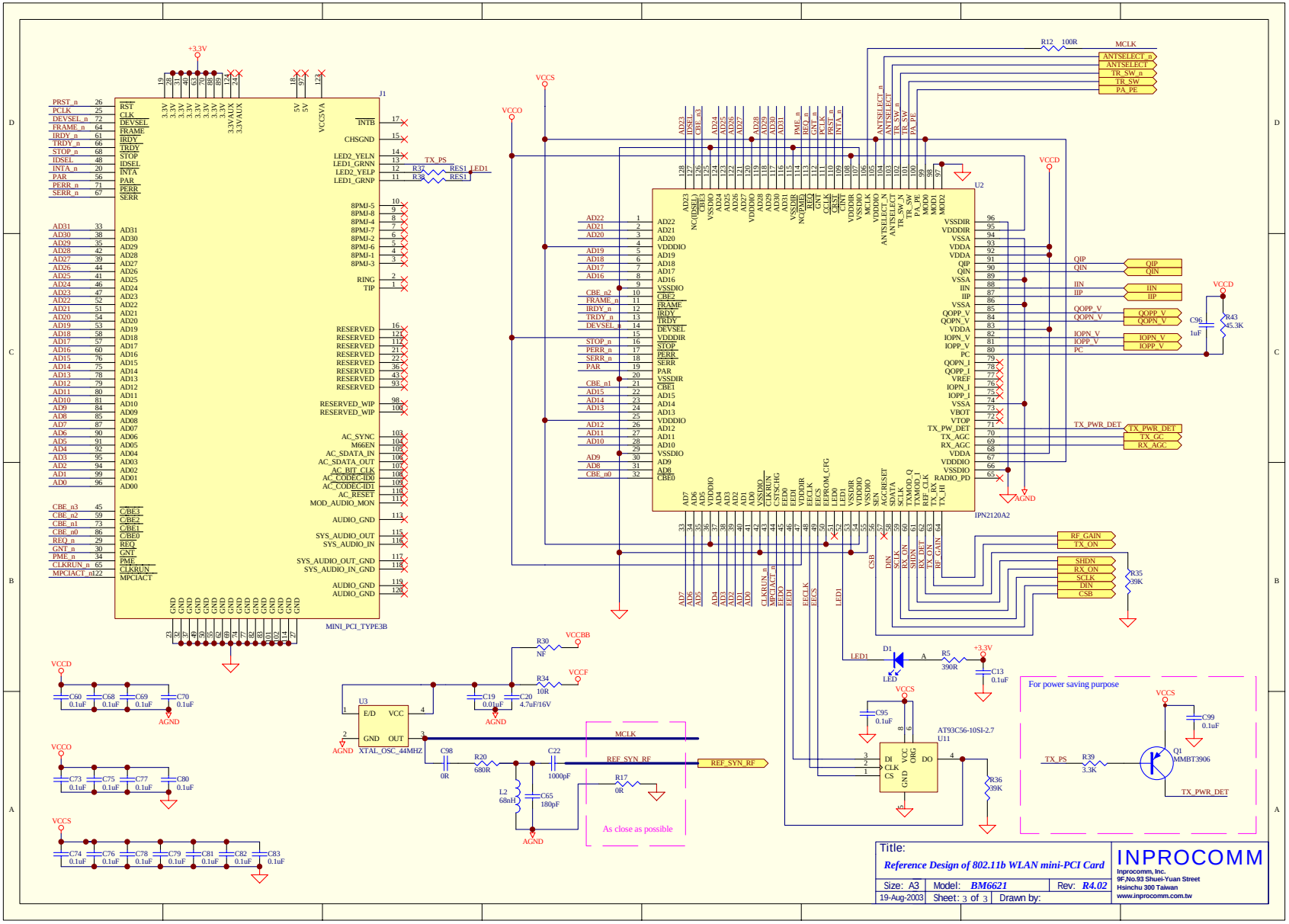
MINI_PCI_TYPE3B
J1
IPN2120A2
U2
U3
XTAL_OSC_44MHZ
AT93C56-10SI-2.7
U11
Q1
MMBT3906
D1
LED
For power saving purpose
As close as possible
Title:
Reference Design of 802.11b WLAN mini-PCI Card
Size: A3
Model: BM6621
Rev: R4.02
19-Aug-2003
Sheet: 3 of 3
Drawn by:
INPROCOMM
Inprocomm, Inc.
9F,No.93 Shuei-Yuan Street
Hsinchu 300 Taiwan
www.inprocomm.com.tw

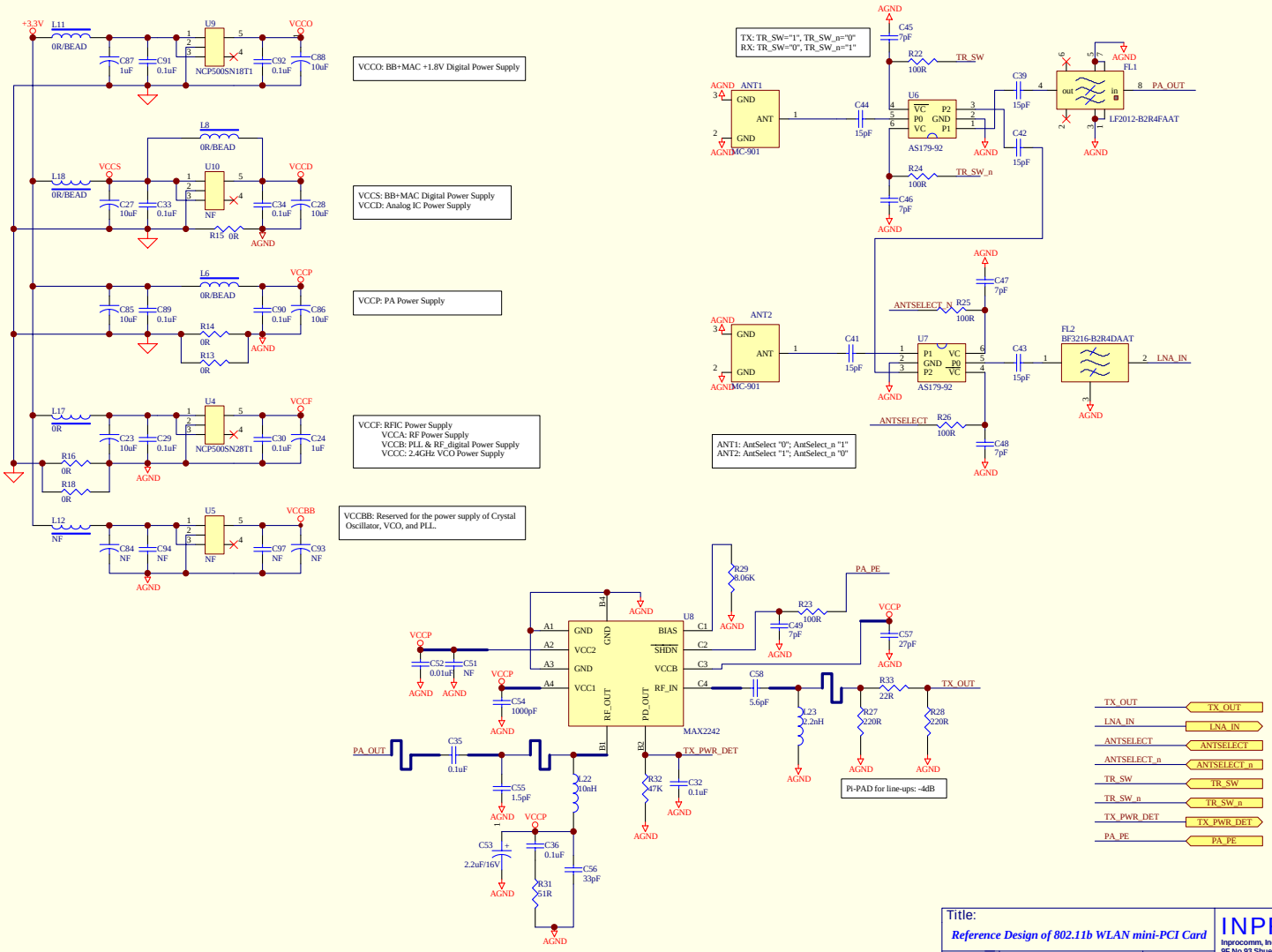

Title:

Reference Design of 802.11b WLAN mini-PCI Card

Size: A3	Model: *BM6621*	Rev: *R4.02*
19-Aug-2003	Sheet: 1 of 3	Drawn by:

INPROCOMM

Inprocomm, Inc.
9F,No.93 Shuei-Yuan Street
Hsinchu 300 Taiwan
www.inprocomm.com.tw

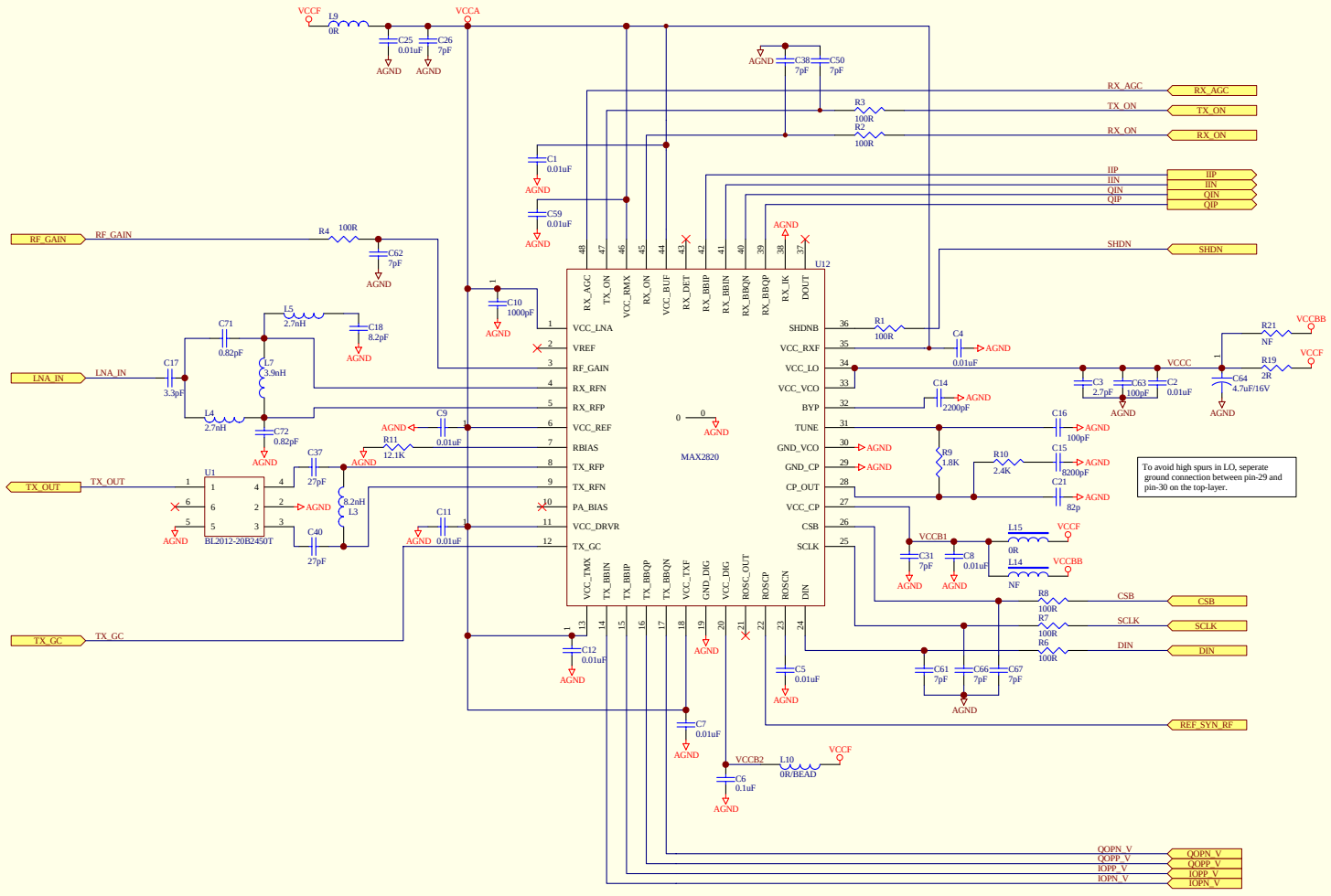

Title:

Reference Design of 802.11b WLAN mini-PCI Card

Size: A3	Model: *BM6621*	Rev: *R4.02*
19-Aug-2003	Sheet: 2 of 3	Drawn by:

INPROCOMM
Inprocomm, Inc.
9F,No.93 Shuei-Yuan Street
Hsinchu 300 Taiwan
www.inprocomm.com.tw