REVISIONS				
ZONE	REV.	DESCRIPTION	DATE	APPROVED

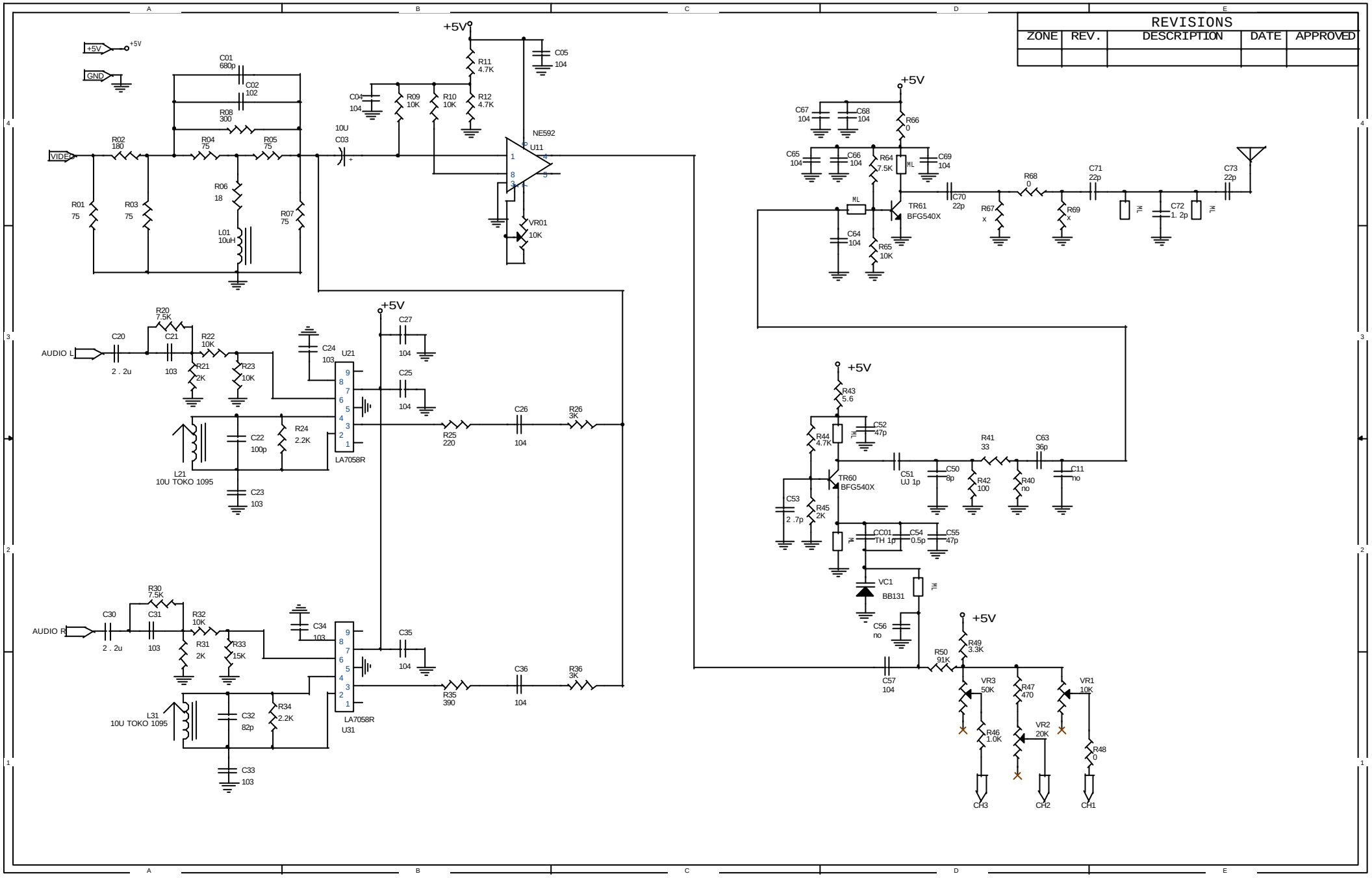

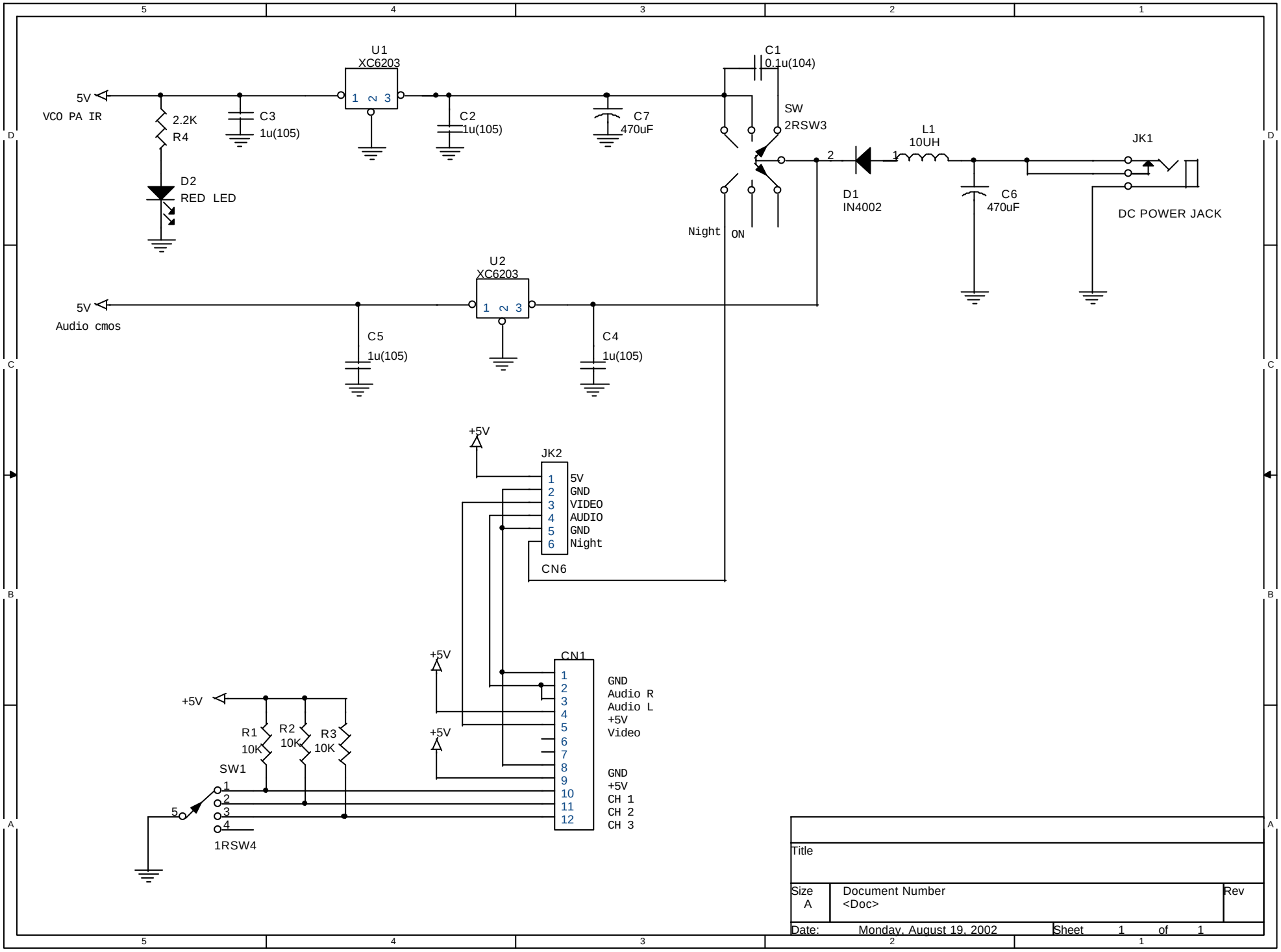
U1
XC6203
1 2 3
5V
VCO PA IR
2.2K
R4
C3
1u(105)
C2
1u(105)
C7
470uF
C1
0.1u(104)
SW
2RSW3
L1
10UH
JK1
D2
RED LED
D1
IN4002
C6
470uF
DC POWER JACK
Night
ON
U2
XC6203
5V
Audio cmos
C5
1u(105)
C4
1u(105)
+5V
JK2
1 5V
2 GND
3 VIDEO
4 AUDIO
5 GND
6 Night
CN6
CN1
1 GND
2 Audio R
3 Audio L
4 +5V
5 Video
6
7
8 GND
9 +5V
10 CH 1
11 CH 2
12 CH 3
R1
10K
R2
10K
R3
10K
SW1
1RSW4
Title
Size
A
Document Number
<Doc>
Rev
Date: Monday, August 19, 2002
Sheet 1 of 1