THE BABY MONITOR WAREHOUSE

Wireless Colour Video and Audio Baby Monitor

User Manual

Electramax Model: eM-50T

Helpline Number 0845 3304163
Monday to Friday, between 9.00am to 5.00pm
or e-mail: helpline@eil-ltd.com

Please read this Manual before use and retain for future reference.

MODEL: eM-50T

Wireless Colour Video and Audio Baby Monitor

INTRODUCTION

Many congratulations on your purchase of the eM-50T Colour Video and Audio Baby monitor with the latest state-of-the-art technology.

Please read this manual before operating the unit and keep it for future reference.

WARNING!

IMPORTANT WARNINGS

Please ensure you read this manual before operating your eM-50T.

WARNING!

- PRIVACY WARNING!
  Do remember that you are using public airwaves when you use the system and that sound and video may be broadcast to other 2.4 GHz receiving devices. Images & conversations, even from rooms near the camera, may be broadcast. To protect the privacy of your home, always turn the camera off when not in use.

- STRANGULATION WARNING!
  Caution to avoid the possibility of entanglement/strangulation keep mains lead/s out of reach of babies and young children.

- CORRECT USE OF ADAPTERS
  The adaptors MUST NOT be interchanged.
  For the Baby Unit - Camera (Transmitter) use the smaller adaptor labelled 9V 300mA and for the Parent Unit - Monitor (Receiver) use the larger adapter labelled 6V 600mA.

  Note: *The adaptors may become warm - this is quite normal and not a hazard.*

- SAFE ADAPTER POSITION
  The adaptors should be positioned in a safe manner to avoid anyone tripping or stepping on the leads. Ensure the adaptors are not in contact with water or other liquids/chemicals. Ensure that they are not placed in direct or indirect contact with heat (e.g, central heating pipes/radiators or gas fires).

- BATTERY SAFEGUARDS
  Use 1.5 volts AA-size Alkaline batteries only.
  Do not use re-chargeable batteries.
  Ensure the polarity (+ and -) of the batteries are installed correctly. Incorrect battery insertion could damage your units.
  Batteries should always be replaced or removed by a responsible adult.
  Keep batteries away from babies, children and pets.
  Dispose of batteries safely, never dispose in fire.
  Do not mix partially used and new batteries.
  Do not mix batteries of different types, e.g. re-chargeable and non re-chargeable
  Do not attempt to charge non re-chargeable batteries.
  Remove batteries if units are not going to be used for some time.
  Remove worn out batteries immediately, to avoid corrosion/leakage.

- eM-50T IS DESIGNED FOR INDOOR USE ONLY.
- THIS IS NOT A TOY.
- KEEP OUT OF REACH OF BABIES AND CHILDREN.
- DO NOT PLACE INSIDE COT.

DECLARATION OF CONFORMITY TO TYPE

MODEL: eM-50T

Description of Equipment: Wireless Colour Video and Audio Baby Monitor

We: Electramax International Limited

Of: Unit 3
Chiswick Business Park
566 Chiswick High Road
London
W4 5YA

Tel:020 8899 6030

Declare under our sole responsibility that the product detailed below:

Is in conformity with the essential requirements and provisions of the R&TTE Directive 1999/5/EC Annex IV

Complies with the following Standards:

- EN60 065 : 1998 - General requirements for Safety.
- EN301 489 : 2001 - General requirements for EMC

Is subject to the procedures set out in Annex IV of the R&TTE Directive 1999/5/EC under the supervision of the Notified Body

Date of Declaration: 2nd June 2003

We hope our product will give you many years of joyful noises, sights and memories.

For spare parts/replacements or purchase of additional cameras (indoors or outdoors) please contact:

ELECTRAMAX INTERNATIONAL LIMITED
Unit 3, Chiswick Business Park, 566 Chiswick High Road, London, W4 5YA

Tel: 020 8899 6030 Fax: 020 8899 6001
Helpline: 0845 3304163 email: helpline@eil-ltd.com

13.0 CARE AND MAINTENANCE

Keep all parts and accessories out of young children's reach.
Fingerprints or dirt on the lens surface can adversely affect camera performance.
Avoid touching the lens surface with your fingers.
Should the lens become dirty, use a soft, dry cloth to wipe the lens.
Keep the camera dry. Precipitation, humidity, and other liquids contain minerals that will corrode electronic circuits.
Do not use or store in dusty, dirty places.
Do not store in hot environment. High temperatures can shorten the life of electronic devices and warp or melt certain plastics.
Do not store in very cold environment. When the system warms up (to its normal temperature), moisture can form inside the units, which may damage electronic circuitry.
Do not attempt to open the case. Non-expert handling of the device may damage the system and will void the guarantee.
Avoid dropping the units or any shocks.
Operate this product using only the power adapters supplied.
Do not overload electrical outlets/extension cords as this can result in fire or electric shocks.

WARNING:
Do remember that you are using public airwaves when you use the system and that sound and video may be broadcast to other 2.4 GHz receiving devices.
Images & conversations, even from rooms near the camera, may be broadcast. To protect the privacy of your home, always turn the camera off when not in use.

This product conforms with the essential requirements as described in directive R&TTE 1999/5/EC and satisfies all the technical regulations applicable to the product within following standard: Safety (73/23/EEC): EN 60065/1998, EMC (89/336/EEC): EN 301 489/2001, RF: EN 300 440/2001

14.0 FCC STATEMENT

This equipment has been tested and found to comply with the limits for a Class B digital device, pursuant to Part 15 of the FCC Rules. These limits are designed to provide reasonable protection against harmful interference in a residential installation. This equipment generates, uses and can radiate radio frequency energy and, if not installed and used in accordance with the instructions, may cause harmful interference to radio communications. However, there is no guarantee that interference will not occur in a particular installation. If this equipment does cause harmful interference to radio or television reception, which can be determined by turning the equipment off and on, the user is encouraged to try to correct the interference by one or more of the following measures: Reorient or relocate the receiving antenna. Increase the separation between the equipment and receiver. Connect the equipment into an outlet on a circuit different from that to which the receiver is connected. Consult the dealer or an experienced radio/TV technician for help.

FCC Label Compliance Statement:
This device complies with Part 15 of the FCC Rules. Operation is subject to the following two conditions:
(1) this device may not cause harmful interference, and
(2) this device must accept any interference received, including interference that may cause undesired operation.
Note: *The manufacturer is not responsible for any radio or TV interference caused by unauthorized modifications to this equipment. Such modifications could void the user's authority to operate the equipment.*

IMPORTANT NOTE

The eM-50T is designed to monitor your baby. It should NOT be considered as a substitute for adult supervision. Neither is it designed to be used as a medical monitor.

When using this product for monitoring your baby, always ensure you are within reach of the Parent unit and personally check your baby as necessary.

YOUR eM-50T MONITOR PACK CONTAINS:

1 x Baby Unit - Camera (Transmitter), 1 x Parent Unit - Monitor (Receiver),
1 x A/V (audio/video) cable, 2 x power adapters (9V DC, 300mA for Baby unit;
6V DC, 600mA for Parent unit, 1 x Mounting Plate, 1 set of Fixing screws and Masonry plugs,
1 x User Manual.
BATTERIES NOT SUPPLIED.

1.0 PRODUCT LAYOUT

1.1 Baby Unit - Camera (Transmitter)

Fig. 1

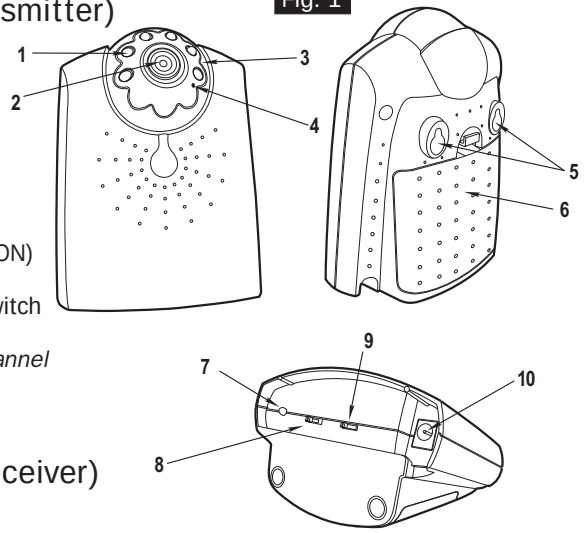

1 Infrared LEDs.
2 Lens.
3 Lens head.
4 Microphone.
5 Keyholes.
6 Battery compartment.
7 Power indicator LED.
8 OFF/ON/NIGHT
(Power OFF/Power ON/Night Vision ON)
9 Channel selection switch.
(Select the channel by sliding the switch to the desired channel number.)
Note: You must select the same channel on the Baby and Parent units.
10 9V 300mA power adapter plug.

1.2 Parent Unit - Monitor (Receiver)

1 Voice sensitivity control.
2 Power/Volume control.
3 Auto mode (Voice-activated function).
4 Channel selection button.
(Select the channel you want by pressing this button.) *Note: You must select the same channel on the Baby and Parent units.*
5 Power indicator LED.
6 Channel indicator LEDs.
7 Brightness adjustment button.
(7 levels of brightness control. The power LED will blink when pressing the (-) or (+) button to the highest or lowest level.)
8 Keyholes.
9 Battery compartment.
10 6V 600mA Power adapter plug.
11 AV output jack (mono sound).

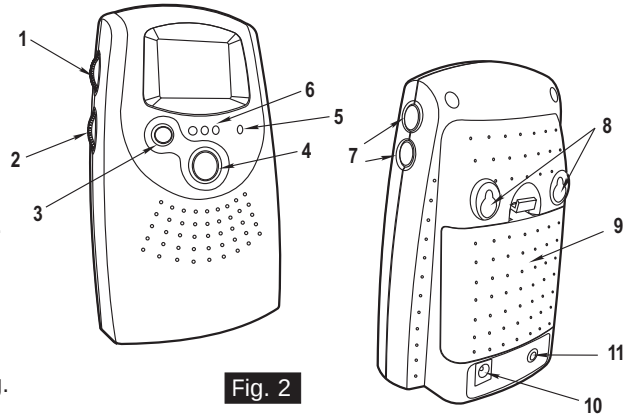

Fig. 2

2.0 SETTING UP THE BABY UNIT - CAMERA (Transmitter)

2.1 Power Supply

The camera uses either 4 x 1.5v AA-Size batteries (use alkaline batteries only) or the household AC current (using the supplied 9V 300mA adapter).

2.2 Loading The Batteries (See Fig. 3).

WARNING
Do not use rechargeable batteries and never mix old batteries with new ones.
Remove the batteries if the unit is not used for a prolonged period of time.

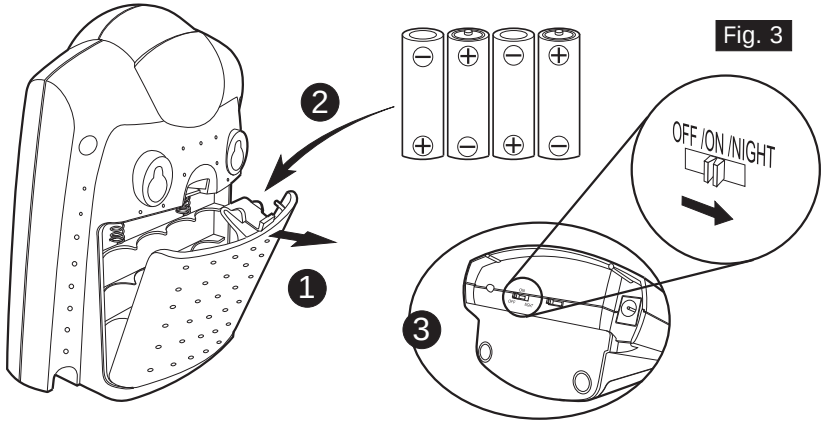

Fig. 3

1 Open the battery compartment cover on the rear of the Baby unit.
2 Insert 4 x AA-size batteries (follow the plus (+) and minus (-) signs on the diagram inside the battery compartment) and then securely close the battery compartment cover.
3 Slide the ON/OFF/NIGHT switch to the ON position (located on the base of the unit). The LED on the bottom of the camera will light up in red, showing the power is ON.

2.3 Using AC Power Adapter

(See Fig. 4)

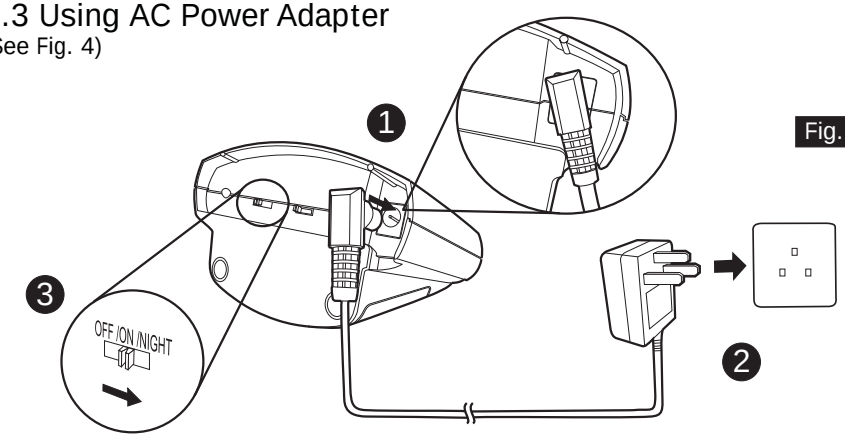

Fig. 4

1 Plug one end of the provided power adapter into the bottom of the Baby unit.
2 Plug the other end of the power adapter into the mains supply.
Note: Use the adapter labeled OUTPUT: 9V 300mA with the Baby unit.
3 Slide the ON/OFF/NIGHT switch to the ON position (located on the base of the unit). The LED on the bottom of the camera will light up in red showing the power is on.

9.0 USING THE eM-50T ABROAD

This monitor is licensed for use in the UK only. Although it will work abroad, its use may be illegal (due to different permitted frequency regulations) and the receiver unit may experience severe interference in some countries.

10.0 GUARANTEE

The product comes with a 12 month guarantee from the date of purchase. We will repair or replace any units that are found to be defective or faulty provided they have been used in accordance with the instructions in this manual.

No user serviceable parts inside. Do not open or tamper with the units as this will invalidate the guarantee.

Please keep your receipt as proof of purchase.

11.0 SPECIFICATIONS

Baby unit - Camera	
Frequency	2.4 GHz
Channel	3 selectable channels
A/V mod/demod. method	FM
Antenna	Built-in Omni-directional antenna
Image Sensor	1/3” CMOS image sensor
Effective pixels	NTSC: 510 (H) x 492 (V)
	CCIR: 628 (H) x 582 (V)
Lens	f 6.0mm, F 1.8
Dimensions	9.2(W) x 12.3(H) x 5.9(D) cm
	(3.6 x 4.8 x 2.3 inches)
Weight	175g (6.17 ounces) without batteries
Power	DC 9V, 300mA or 4 x 1.5v AA-size batteries
Operating temperature	0°C ~ 40°C (32°F ~ 104°F)
Parent unit - Monitor	
Frequency	2.4 GHz
Channel	3 selectable channels
A/V mod/demod. method	FM
Antenna	Built-in Omni-directional antenna
Display	1.5" LTPS-TFT LCD
Display colors	Full-color
Dimensions	8.5(W) x 14(H) x 5.3(D) cm
	(3.3 x 5.5 x 2.1 inches)
Weight	240g (8.52 ounces)
Power	DC 6V, 600mA or 4 x 1.5v AA-size batteries
Operating temperature	0°C ~ 40°C (32°F ~ 104°F)

7.3 Voice-Activated Function (Auto Mode), (See Fig. 12).

This voice-activated mode allows you to set the sensitivity of audio level that will trigger the monitor. To use voice-activated function, follow these steps:

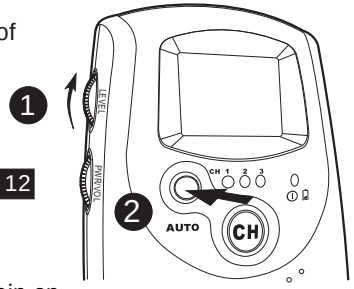

Fig. 12

1 Set the sensitivity control on the monitor to the level you prefer.
Note: The sensitivity level can vary between 0 and 9. A value of 0 gives minimum sensitivity, a value of 9 gives maximum sensitivity.
2 Press the Auto button on the front of the monitor. This will turn off the screen but the power LED will remain on.
3 When the sound from the camera reaches the set level, the screen will turn on automatically. It will turn off again after 30 seconds.
Note: Under/In voice-activated mode, the monitor can only detect signal input from one camera at a time. The CH button is not functional under Voice-activated mode.

8.0 TROUBLESHOOTING

Should you have any problems operating your eM-50T please refer to the table below. However if the problems cannot be resolved then please call us on the helpline or email us on helpline@eil-ltd.com

Problem	Possible Cause	How to Resolve
No signal received on Parent unit.	Batteries may be weak/flat.	Replace Batteries.
	AC adaptors are not connected properly.	Ensure adaptors are properly connected. If either unit works with batteries but not with the adaptor, then replace adaptor.
	Different channels selected on both units.	Ensure Baby and Parent units are set to same channel.
	Either or both units are OFF.	Ensure both units are turned ON.
	Parent unit is in Auto mode and sensitivity is set too low.	Either increase the sensitivity and/or turn Auto mode OFF by pressing the Auto button on Parent unit.
Poor signal or inference on Parent unit.	Different channels selected on both units.	Ensure Baby and Parent units are set to same channel.
	Microwave Oven in use in the path of units	Move Microwave Oven to different location lor turn off.
	The units are out of range.	Ensure both units are within range of each other (approx. maximum range is 300 feet in clear line of sight).
	If power LED is ON but only voice signal is detected, the Parent unit may be in Voice-activated mode.	Press Auto button to turn the screen ON.
Picture on screen on Parent unit is received in B&W and not in colour	Baby unit is set to NIGHT VISION mode	Change setting to ON. During night/Dark room environment, picture is received in B&W when Baby unit is set to NIGHT VISION mode.

3.0 Fine Tuning the Baby Unit (Camera)

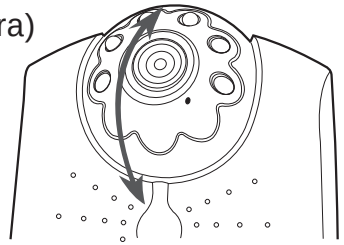
Fig. 5

WARNING: please ensure you read Important Warnings on page 2 of this manual prior to use.

Place the camera in a convenient location, point the lens towards the observation area and adjust the angle by rotating the lens head in a vertical direction. (See Fig. 5)

4.0 Mounting the Baby Unit (Camera)

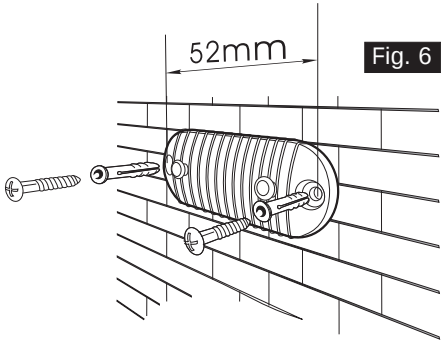

Fig. 6

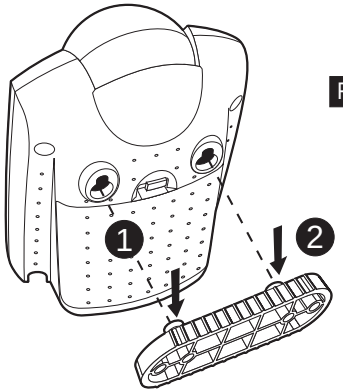

Fig. 7

Note 1: *The monitor reception should be tested before fixing the camera in place. Have someone hold the camera against the wall in the selected mounting area while you check the reception on the monitor. If interferences or other problems occur, refer to the Troubleshooting section. You may need to select a different location in the room for mounting the camera. A set of fixings for masonry has been included.*
Note 2: *Where the wall is constructed of plasterboard or an alternative type of material please consult a qualified person for ascertaining the correct fixing to be used.*
Note 3: *The approximate maximum transmission range is 300 feet (clear line of site), however the actual transmission distance will be dependant on the number and type of walls/ceilings/constructions and other obstacles that may reduce the transmission range.*

1 Drill two holes 52mm apart in a line, at the camera mounting position.
2 Fix the provided mounting plate to the wall using the masonry plugs and fixing screws supplied, (See Fig. 6).
3 Place the camera against the mounting plate so that the studs on the mounting plate are adjusted to the keyholes on the back of camera. Then pull the camera down to slide the studs into the cutout channels, (See Fig. 7).

5.0 Night Vision Setting on the Baby Unit (Camera)

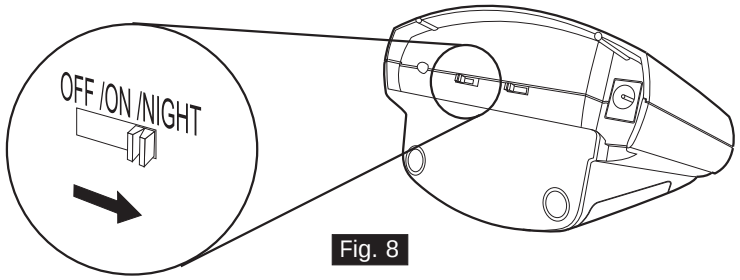

Fig. 8

Slide the OFF/ON/NIGHT switch to the NIGHT position. Use this night mode when your baby or child is in a darkened room. The small LED around the lens allow the night vision facility.

Note: *The picture will be displayed in black and white only.*

You must still ensure that the channel selection on the Baby Unit and Parent Unit are synchronised.

6.0 SETTING UP THE PARENT UNIT - MONITOR (Receiver)

6.1 Power Supply

The monitor uses either 4 x 1.5v AA-Size batteries (use alkaline battery only) or the household AC current (using the supplied 6V 600mA adapter).

6.2 Loading the Batteries (See Fig. 9).

WARNING
Do not use rechargeable batteries and never mix old batteries with new ones.
Remove the batteries if the unit is not used for a prolonged period of time.

1 Open the battery compar tment cover on the rear of the Parent unit.
2 Insert 4 x AA-size batteries (follow the plus (+) and minus (-) signs on the diagram inside the battery compar tment) and then securely close the battery compar tment cover.
Note: *The power indicator LED will flash indicating the batteries need to be replaced, when the battery power is low.*
3 Turn the unit ON using the dial labelled PWR/VOL.
4 Set the same channel as on the Baby unit, by pressing the CH button.
5 Adjust the volume, using the dial labelled PWR/VOL.

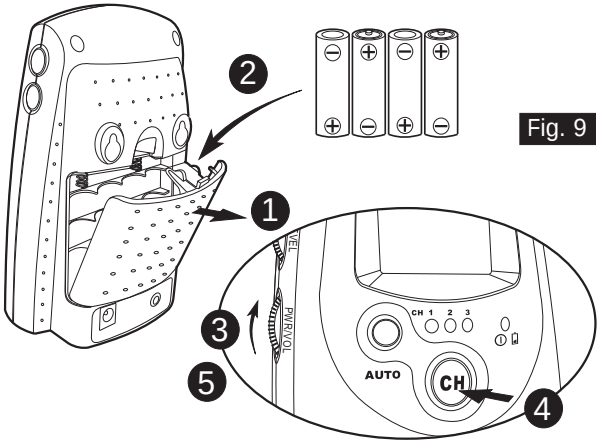

Fig. 9

6.3 Using AC Power Adapter

(See Fig. 10).

1 Plug one end of the provided power adapter into the bottom of the Parent unit.
2 Plug the other end of the power adapter into the mains supply.
Note: *Use the larger adapter labelled OUTPUT: 6V 600 mA with the Parent unit.*
3 Turn the unit ON using the dial labelled PWR/VOL.
4 Set the same channel as on the Baby unit, by pressing the CH button.
5 Adjust the volume, using the dial labelled PWR/VOL.

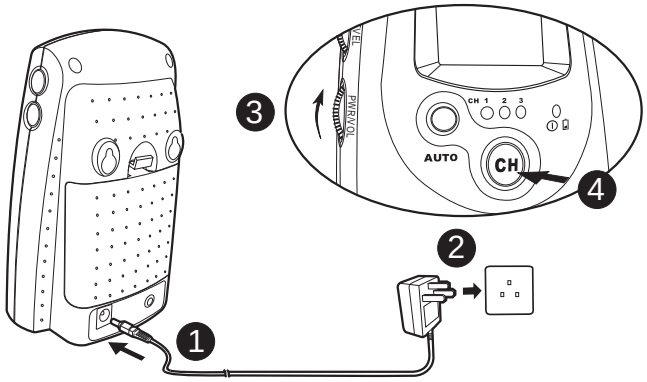

Fig. 10

7.0 ADDITIONAL FACILITIES

You will be pleased to know that you can also view your baby on your television screen as well as record your baby on a VCR (via the Parent Unit) so you don't miss those special moments. If your television has a picture in picture facility, you can constantly view your baby at the same time as watching your favourite programme.

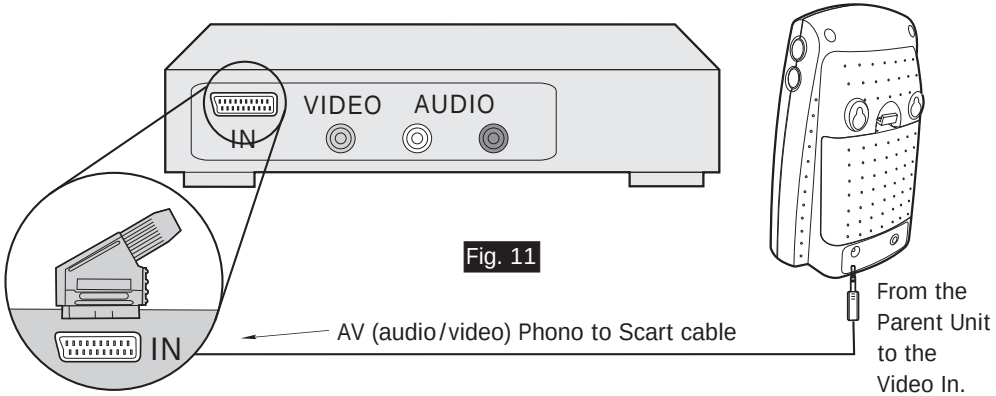

Fig. 11

7.1 Recording on a VCR (See Fig. 11)

The Parent unit has a AV (audio/video) output jack for connecting to a VCR/TV for recording/viewing.

1 Connect the mini plug of the provided AV cable to the AV jack on the rear of the Parent unit.
2 Connect the other end of the AV cable to the Scart connector on the VCR/TV, usually labelled LINE IN.

7.2 Additional Cameras

This unit has the added facility of catering for two additional cameras. These cameras can be purchased as separate accessories. Both indoor and outdoor cameras are available directly from Electramax. Whilst camera 1 is viewing your baby in the nursery, cameras 2 or 3 could be used either as a security device (ie installed outside your front door/side entrance) or alternatively for monitoring separate rooms. Each location can be viewed by changing the channel number on the Parent Unit to channels 1, 2 or 3.