3 FC7100 technology

- **Android 2.3 and 4.2**
  - Linux based
  - Hardware independent
  - Large number of applications available
  - Web Browser included
  - Easy Specific HMI design with Android SDK

- **Bluetooth connectivity**
  - **Bluetooth Power Class 2 Radio**
  - **Embedded Bluetooth V4.0 Low Energy**
  - Compatible with virtually all Bluetooth phones
  - Pairing and connection with all Bluetooth Devices: Phones, Smartphones, PDA …
  - Multiple user support : Up to 10 paired phones
  - Multiple connections (up to 3 devices connected at the same time)
  - Multiple profiles active simultaneously
  - Bluetooth Stack specification:
    - HCI (Host Controller interface)
    - L2CAP (Logical Link Control and Adaptation Protocol)
    - RFCOMM (Radio Frequency Communication)
    - SDP (Service Discovery Protocol)
    - OBEX (IrDA Object Exchange)
    - Channel manager, AMP Manager, HCI AMP
    - Enhanced Power Control
    - Unicast Connectionless Data
    - HCI Read Encryption Key Size command
  - Embedded Bluetooth profiles supported:
    - Generic Access Profile
    - Phone Management
    - HFP 0.96 - 1.0 - 1.5
    - HSP 1.0
    - SAP (SIM Access Profile)
    - Message Management
    - MAP 1.0
    - Phone Book
    - PBAP 1.0
    - SYNC 1.1 (IrMC SYNC over BT)
    - SYNCML
    - OPP 1.0 Server/Client (Vcard 3.0)
    - GSM 07.07 AT Commands
    - Nokia synchronization protocol
    - Multimedia
    - A2DP (Audio)
    - SBC decoding
    - MP3 decoding - optional
    - AVDTP
    - AVRCP1.0 / AVRCP1.3 / AVRCP1.4
    - SPP 1.1
    - BNEP, PAN

- FTP 1.0
- Image transfer over OPP
- DUNP 1.1
- Software update over SPP
- Secure Simple Pairing

- **Digital Signal Processing**
  - Microphone(s), the module can manage two configurations:
    - Single microphone
    - Two microphones with AMS (Automatic Microphone Selection): 1 for the driver and 1 for the front seat passenger. The best microphone is automatically selected during the call.
  - Noise Reduction (NR):
    - Maximal NR is 25dB.
    - Typical NR is 15dB.
    - No musical noise
    - No fluctuation of the residual noise level
    - Automatic adaptation of the Noise Reduction to the Signal-to-noise ratio (SNR) to keep the best voice quality in idle and remove more noise in noisy conditions.
  - Acoustic Echo Cancellation (AEC):
    - The level of echo attenuation, called ERLE is 45dB (measured according to the VDA process).
    - Comfort Noise feature so that the background noise is adjusted after AEC algorithm, in order to keep it constant for enhanced communication experience.
    - Possibility to accept up to 100ms of delay in the speaker path for digital amplifiers.
    - Full duplex
  - Automatic Level Control (ALC):
    - Different phones can have different Speaker volumes (up to 20dB of difference). It adapts the signal level received from the phone to the target level, quickly and precisely.
  - Equalizer :
    - 7 bands equalizer for microphones and speaker paths.
  - Tuning :
    - Car independent tuning if the microphone position and characteristics are the same.
    - Possibility to tune all parameters of the audio algorithms according to Customer preferences.
  - Wideband speech:
    - Support of HFP 1.6
    - All speech processing algorithms will work @ 16 kHz.

- **External Bluetooth & WiFi Antenna diagnostic**

- **FC7100 Wi-Fi protocol summary**

WLAN	
802.11a - 5GHz WiFi 54Mbps	Yes
802.11b - 2.4GHz WiFi 11Mbps	Yes
802.11d - "World Mode"	Yes
802.11e - Quality Of Service	Yes
802.11g - 2.4GHz WiFi 54Mbps	Yes
802.11h - 5GHz interferrence avoid	Yes
802.11i - Security	Yes
802.11j - Japan Standard	No
802.11n - 2.4GHz WiFi 150Mbps	Yes
802.11r - Fast basic service set transition	Yes
802.11y - High Power WiFi	No
Access Point support	on reset -firmware change
Ad-Hoc	Yes
Client	Yes
WPA2 / WPA	Yes
Coexistence	

- **Bluetooth 4.0+LE use cases**

  The increased data transfer speed offered by BT4.0 LE enhances existing Bluetooth profiles and use cases
  - Faster phonebook synchronization, especially contacts with photos.
  - Faster FTP Transfers
  - Faster PAN profile, for better internet connection
  - Due to the 2 radio connections available, it is possible to have several profiles at the same time for instance phonebook synchronization + AD2P or HFP + PAN transfer simultaneously
  - Pairing additional wireless devices such as remote controller, using Bluetooth Low Energy.
- **Audio Player**
  - Multi Sources (Line-In, USB, SD, iPod, iPhone, BT/Wi-Fi)
  - Call artists and albums by voice recognition
  - Multiple codecs and containers supported (External licences apply)

CODEC Audio
MPEG-1 Layer III (mp3), 32-320kbit/s, 32/44.1/48kHz, CBR/VBR, mono/stereo.
MPEG-2 Layer III (mp3), 8-160kbit/s, 16/22.05/24 kHz, CBR/VBR, mono/stereo.
LPCM, 8-48kHz, 8-32bit, mono/stereo.
FLAC, 1-48kHz, 4-24bit, VBR , mono/stereo.
AAC LC (MPEG-4 part III Audio), 8-48KHz, CBR/VBR,mono/stereo.
HE-AAC (aacPlus, MPEG-4 part III Audio), 8-48KHz,CBR/VBR, HE-AAC v1/2.
HD-AAC (MPEG-4 part III Audio), 8-48KHz, CBR/VBR,mono/stereo, Only lossy AAC layer.
WMA/WMA9, up to 48kHz, mono/stereo, CBR/ABR/VBR
Vorbis, q0 to q10 quality classes, 8-48kHz, VBR, mono/stereo.
AMR-WB
AMR-NB

CONTAINER Audio
MP3.
ASF.
OGG.
WAV/WAVE.
MP4 (audio)
MP4A.
AAC.

Embedded MP3 decoder from Thomson Licensing (optional)

- **Built-in hardware video decoder**
  - Multiple codecs and containers supported:

CODEC Vidéo
H.264/MPEG-4 AVC.
VP8
CONTAINER Video
MPEG-TS.
MP4.
3GP/3G2.

- **Built-in hardware video encoder**
  - Encode H.264
  - MVC Stereo High
  - OpenMAX IL API support

- **Video interface**
  - Up to 3 cameras interfaces : 1x 16 bits + 1x8bits or 3x up to 8 bits, 720p, ITU-601 or ITU-656 protocols
  - Up to 2 LCD interfaces : 1 up to 24 bits and 1 x 8 bits, 1080p, ITU-601 or ITU-656 protocols
  - Several image signal processing:
    - Chroma conversion,
    - Scaling (with some limitations, see “Hantro HW Post-Processor API 1.1 User Manual” §2.2.2),
    - Rotation (nx90° + mirror)
    - Deinterlacing, contrast and brightness control, image cropping YUV to RGB conversion

4 Vehicle Integration

The FC7100 module can be integrated behind the LCD display, inside the headunit, or in a standalone Electronic Control Unit (ECU) located somewhere in the vehicle and connected to the vehicle bus (e.g. CAN).

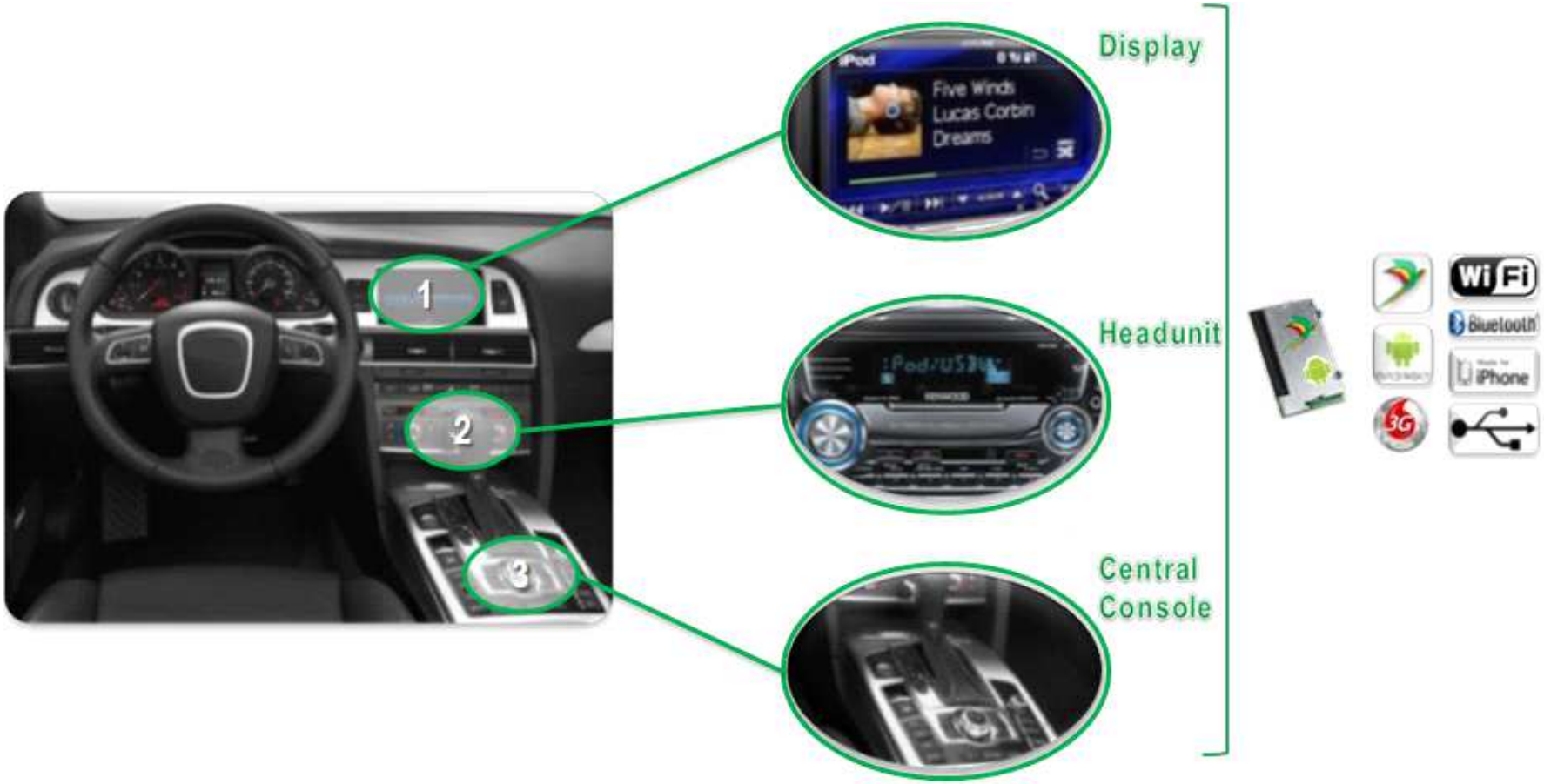

4.1 FC7100 in a standalone ECU, interfaced to an entry headunit

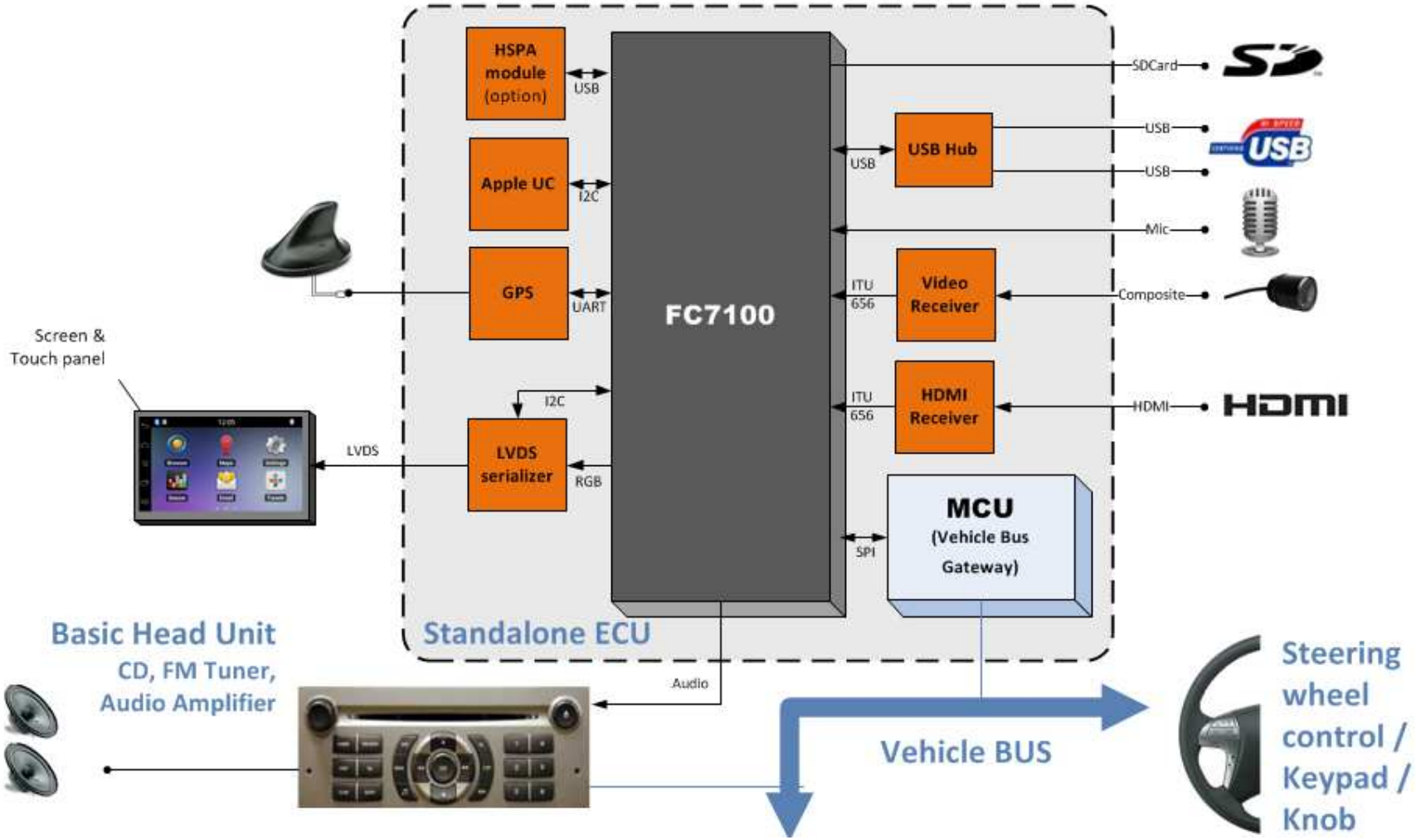

4.2 FC7100 in a standalone ECU, interfaced to a premium headunit

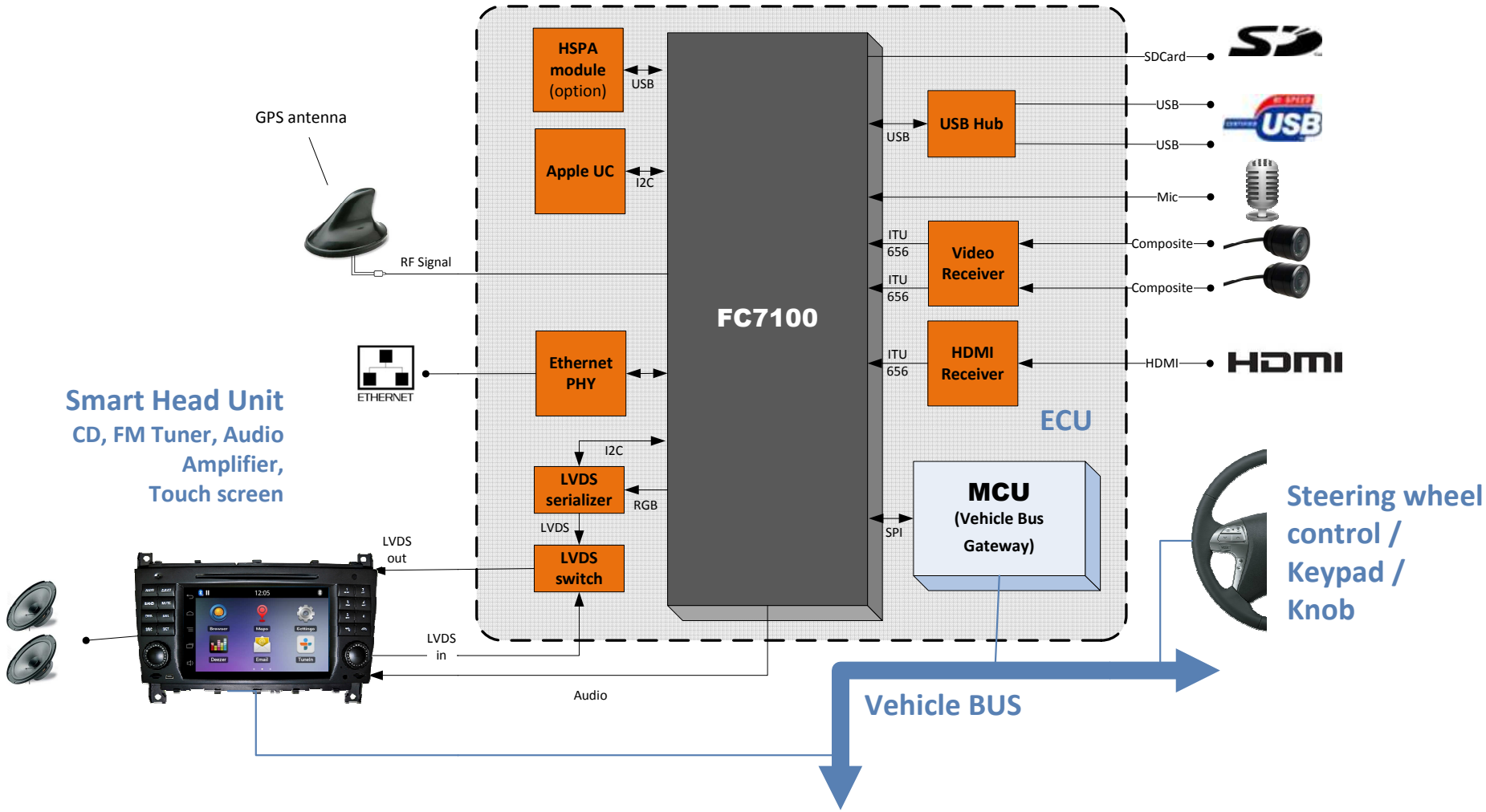

4.3 Smart Display: the FC7100 is behind the LCD, in the same housing

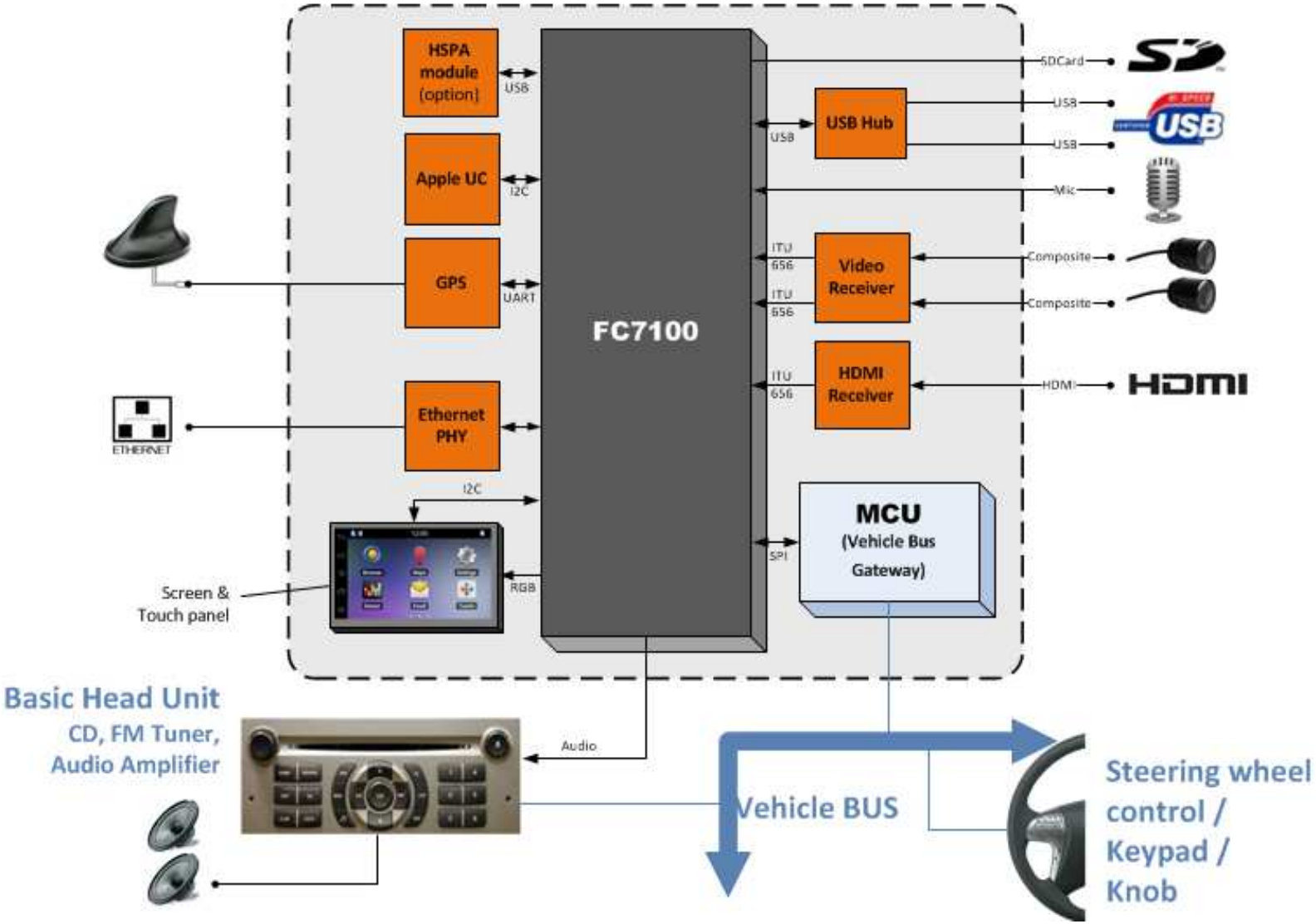

4.4 FC7100 integrated into the headunit

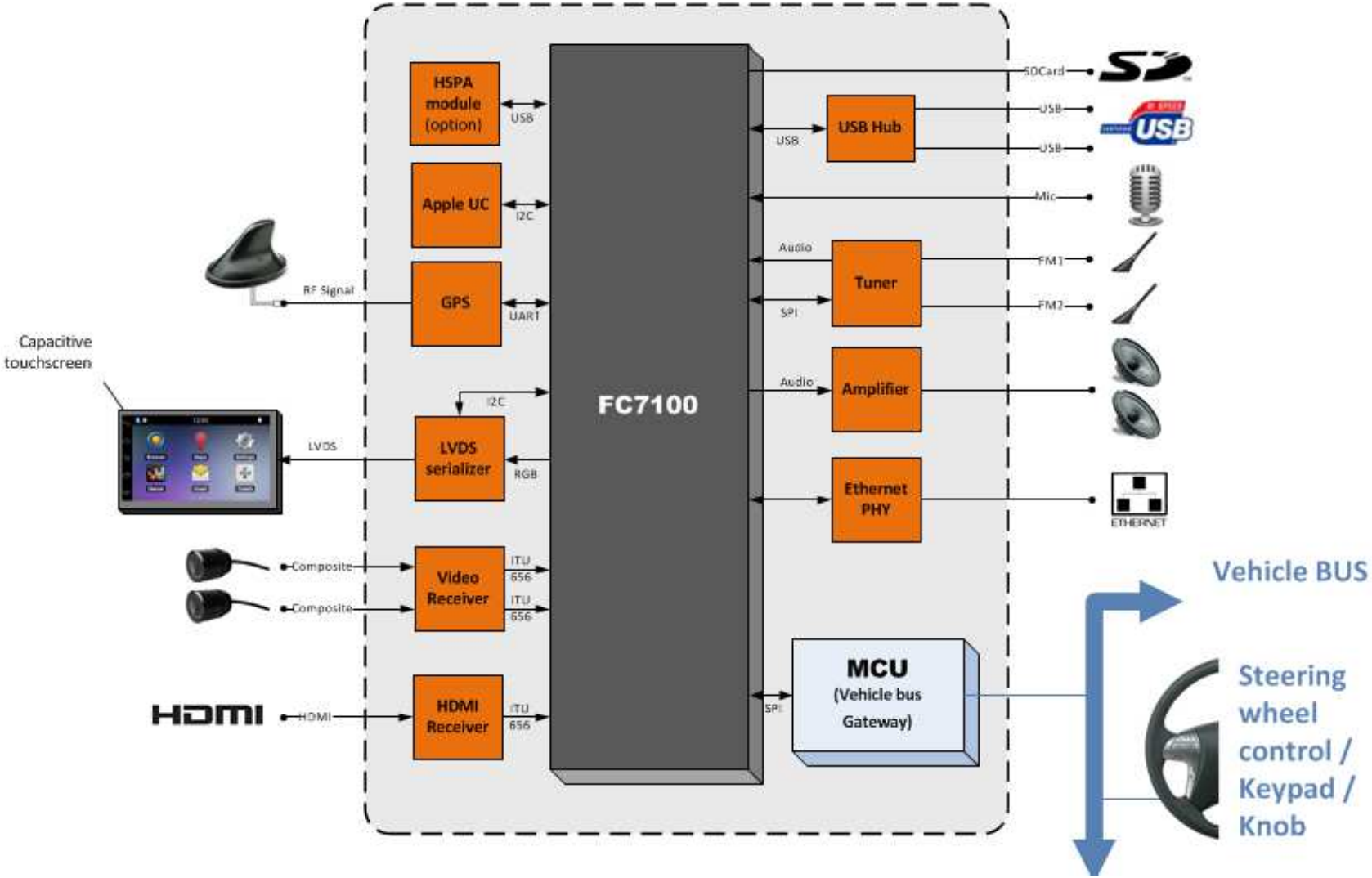

4.5 Rear Seat Entertainment network

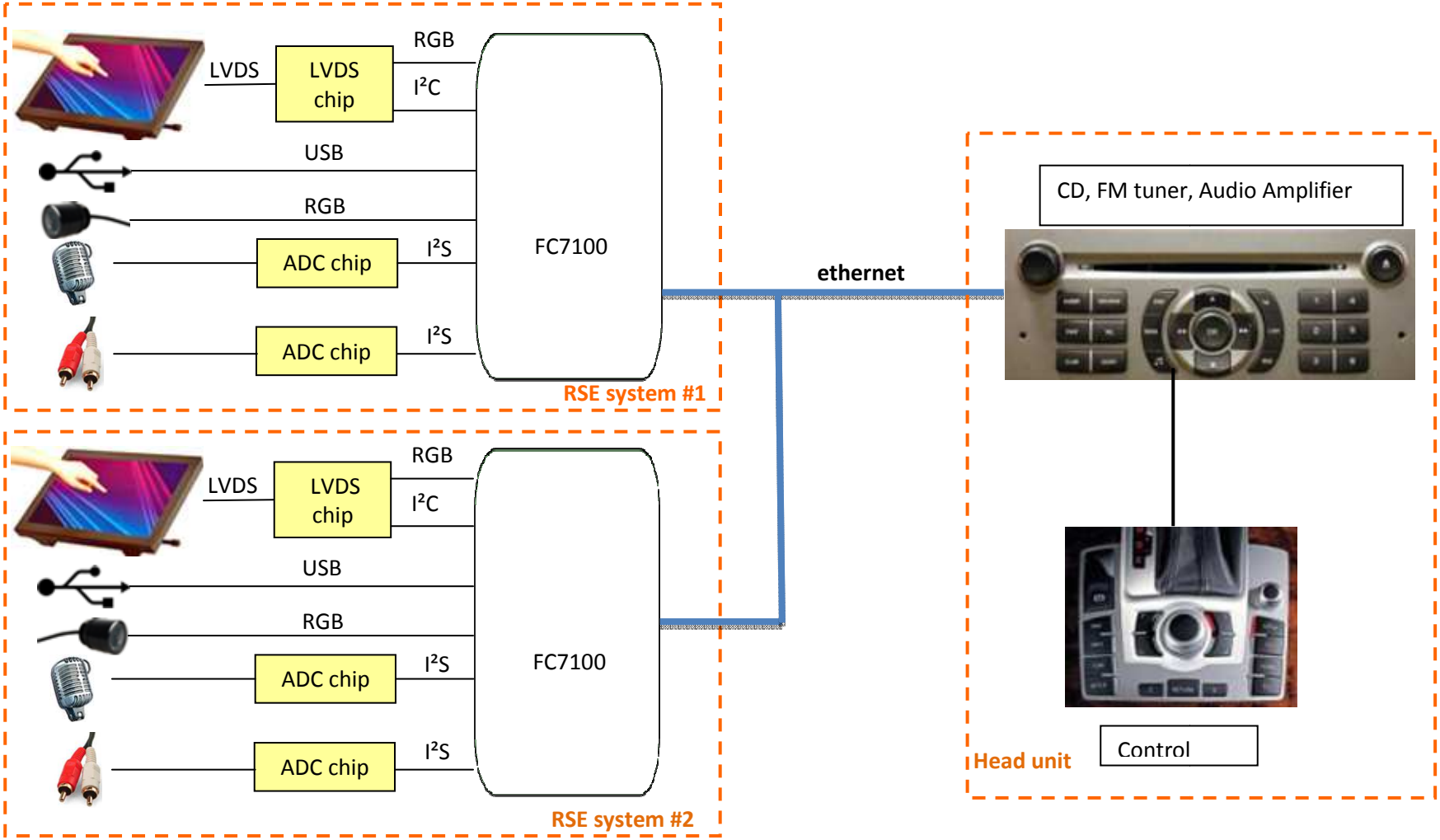

4.6 Components Proposal for Vehicle Integration

- SPDIF transceiver : SIRUS LOGIC - CF8406
- LVDS Serializer : Texas Instrument - DS90UB925Q
- LVDS Serializer : Texas Instrument - DS90UB928Q
- USB Hub : SMSC - USB82514
- HDMI transceiver : Analog Device - ADV7611
- Analog Video In : Texas Instrument - TVP5151

5 FC7100 Hardware

5.1 Hardware overview

5.1.1 Main components

5.1.1.1 Processor

The FC7100 design is based on the Parrot ASIC P7, the latest dual core processor chip from Parrot. It provides all the necessary features for advanced embedded multimedia processing:

- A Dual-core ARM Cortex-A9 processor operating up to 780MHz
- 128kB of internal RAM (@390MHz)
- 128kB of internal ROM (@195MHz)
- Off-chip DDR3 SDRAM memory controller
- NANDFLASH memory controller with 32 bit BCH
- Interfaces : SPI, SDIO, USB, parallel interface for LCD, PWM, UART, I^2C, GPIO, I^2S inputs and outputs,
- 1 Ethernet controller
- Graphical Processing Unit, with video encoding and decoding
- Advanced Video Interface with LCD controllers, camera interfaces, video scalers and rotators, planes blender.

5.1.1.2 Power management unit

The P7MU is the analog companion chip of the Parrot 7. It provides the necessary features for powering a P7 with in addition several other analog functionalities:

- Programmable DC/DC converters
- LDO for DDR3 Termination
- LDO for DDR3 Ref
- 12-bit 1MS/s ADC
- 2 instances of USB PHY

5.1.1.3 Radio Frequency

FC7100 is proposed in a basic configuration with an external antenna for 2.4 GHz, allowing Bluetooth 4.0 Low Energy and WiFi 802.11 b, g & n communication.

With an additional 5.0GHz external antenna, WiFi 802.11 a & n can be added. Also GPS / Glonass feature can be added, with a third external antenna.

5.1.1.4 Memory

The FC7100 basic Memory configuration is 8 Gbits NAND Flash and 8 Gbits DDR3 RAM. These memory capacities can be increased

5.1.2 Hardware Architecture

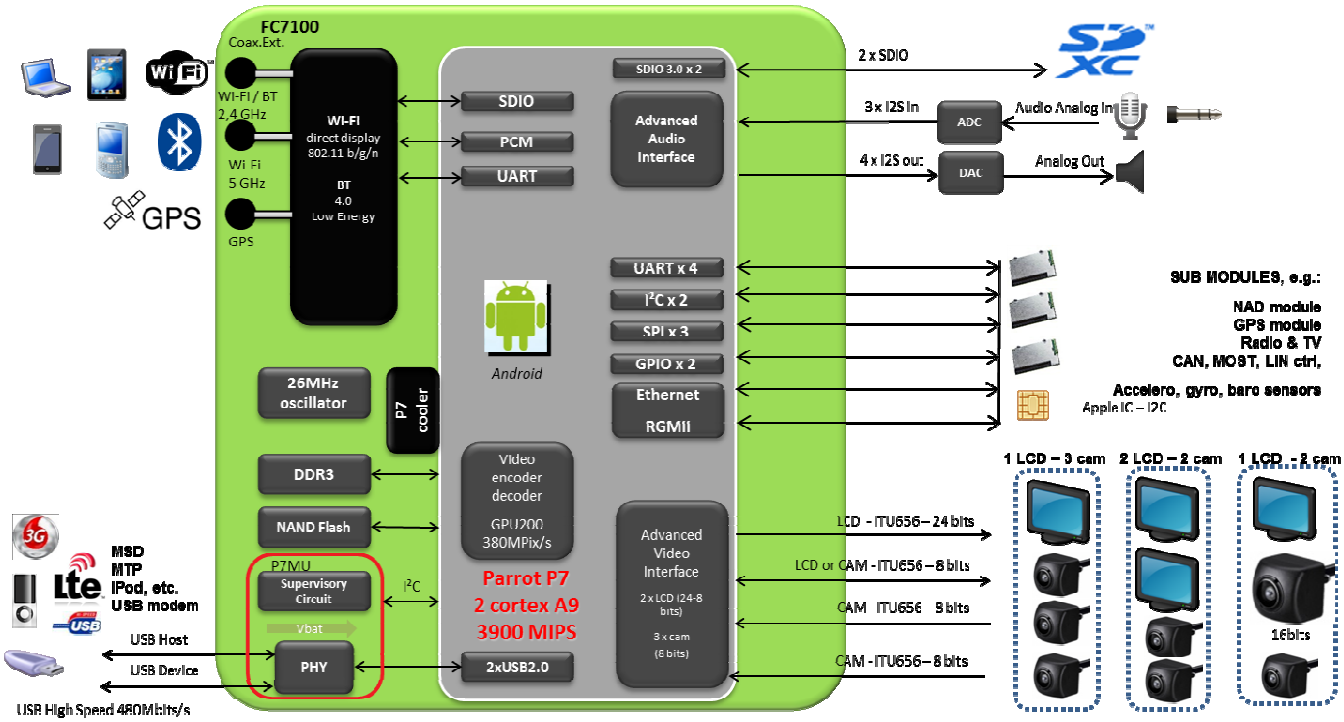

** Many other display and record interface option are available.*

See paragraph: 1.1.2.1 Display and record interface option.

5.1.3 Electrical Specifications

Conditions unless otherwise noted: Tamb.= 25°C; Vcc = 3v3_Main = 3V3

5.1.3.1 Power Pin

Parameter	Min	Typ	Max	Unit
3V3_MAIN (=Vcc)	3,135	3,3	3,6	V
3V3_PERM	3,135	3,3	3,6	V
VDD_ETH	1,71	1,8	1,89	V
	2,37	2,5	2,62	V
	3,13	3,3	3,46	V
VDD_SD1	1,71	1,8	1,89	V
	3,13	3,3	3,46	V
VDD_SD2	1,71	1,8	1,89	V
	3,13	3,3	3,46	V

5.1.3.2 Power Consumption

- **3v3 Permanent (3V3_PERM):**

Feature	Min	Typ	Max	Unit
Deep Low power	-	20	TBD	µA
Low Power	-	30	TBD	µA
Run/Standby mode	-	30	TBD	µA

- **3v3 MAIN:**

Feature	Min	Typ	Max	Unit
Low Power	-	280	TBD	mA
Run/Standby mode	-	900	TBD	mA
BT Hands Free or Audio streaming mode	-	980	TBD	mA
Wifi Streaming	-	1380	TBD	mA
Video rendering	-	1140	TBD	mA
Inrush Current	-	9	TBD	A
Peak current at startup (duration)	-	74,8	TBD	µs

5.1.4 Pin Out Table

Here below the FC7100 main connector (140 pins):

Pin			Function	Type	Power Domain	Description
1	USB_0		USB_0_DN	I/O		USB 0 Data -
3			USB_0_DP	I/O		USB 0 Data +
5			USB_0_VBUS	I	5v	USB 0 VBUS
7	Wake_Up		Wake_Up_LPO	I	3V3	Wake Up Low Power
9	PowerVDD_SD1_UART_5_6_7		VDD_SD1_UART_5/6/7 INPUT	P	1v8 / 3v3	Power Supply SDIO1 and UART 5/6/7
11	3V3_MAIN		3V3_MAIN	P	3V3	Power supply : 3v3
13			3V3_MAIN			
15			3V3_MAIN			
17	Power_Good		Power_Good	O	3V3	Power Good
19	3V3_PERM		3v3_PERM	P	3V3	Power Supply Permanent : 3v3
21	Ethernet RGMII	GPIO	ETH_RGMII_TXD_00 / GPIO_139	I/O	VDD_ETH	GPIO **or** Ethernet RGMII Tx Data 0
23			ETH_RGMII_TXD_02 / GPIO_141	I/O	VDD_ETH	GPIO **or** Ethernet RGMII Tx Data 2
25			ETH_RGMII_RXD_00 / GPIO_145	I/O	VDD_ETH	GPIO **or** Ethernet RGMII Rx Data 0
27			ETH_RGMII_RXD_02 / GPIO_147	I/O	VDD_ETH	GPIO **or** Ethernet RGMII Rx Data 2
29			ETH_RGMII_RX_CTL / GPIO_149	I/O	VDD_ETH	GPIO **or** Ethernet RGMII Rx Control
31			ETH_RGMII_TX_CTL / GPIO_143	I/O	VDD_ETH	GPIO **or** Ethernet RGMII Tx Control
33			ETH_RGMII_RX_CLK / GPIO_144	I/O	VDD_ETH	GPIO **or** Ethernet RGMII Rx Clock
35	GND			P	Gnd	Ground
37	SPI[8:11]	AAI	SPI_11 / GPIO_088 / AAI_26	I/O	3V3	GPIO **or** SPI **or** AAI
39			SPI_10 / GPIO_087 / AAI_25	I/O	3V3	GPIO **or** SPI **or** AAI
41			SPI_09 / GPIO_086 / AAI_24	I/O	3V3	GPIO **or** SPI **or** AAI
43			SPI_08 / GPIO_085 / AAI_23	I/O	3V3	GPIO **or** SPI **or** AAI
45	GND			P	Gnd	Ground
47	SPI [0:7] Part 1	AAI	SPI_07 / GPIO_084 / AAI_22	I/O	3V3	GPIO **or** SPI **or** AAI
49			SPI_06 / GPIO_083 / AAI_21	I/O	3V3	GPIO **or** SPI **or** AAI
51			SPI_05 / GPIO_082 / AAI_20	I/O	3V3	GPIO **or** SPI **or** AAI
53			SPI_04 / GPIO_081 / AAI_19	I/O	3V3	GPIO **or** SPI **or** AAI
55			SPI_01 / GPIO_078 / AAI_16 / CAN1_RX	I/O	3V3	GPIO **or** SPI **or** AAI
57			SPI_00 / GPIO_077 / AAI_15 / CAN1_TX	I/O	3V3	GPIO **or** SPI **or** AAI
59	I2C_1		I2C_1_CLK / GPIO_062	I/O	3V3	I2C 1 Clock **or** GPIO
61	I2C_2		I2C_2_CLK / GPIO_060	I/O	3V3	I2C 2 Clock **or** GPIO
63	UART 0	GPIO	UART_0_CTS / GPIO_058	I/O	3V3	UART 0 CTS **or** GPIO
65			UART_0_RX / GPIO_055	I/O	3V3	UART 0 RX **or** GPIO
67			UART_0_TX / GPIO_056	I/O	3V3	UART 0 TX **or** GPIO
69			UART_0_RTS / GPIO_057	I/O	3V3	UART 0 RTS **or** GPIO
71	CAM_1	CAM_0 (16 bits)	CAM_1_DAT15 / CAM_0_DAT07 / GPIO_216	I/O	3V3	CAM 1 Data 7 **or** CAM 0 Data 7 **or** GPIO
73			CAM_1_DAT14 / CAM_0_DAT06 / GPIO_215	I/O	3V3	CAM 1 Data 6 **or** CAM 0 Data 6 **or** GPIO
75			CAM_1_DAT13 / CAM_0_DAT05 / GPIO_214	I/O	3V3	CAM 1 Data 5 **or** CAM 0 Data 5 **or** GPIO
77			CAM_1_DAT12 / CAM_0_DAT04 / GPIO_213	I/O	3V3	CAM 1 Data 4 **or** CAM 0 Data 4 **or** GPIO
79			CAM_1_DAT11 / CAM_0_DAT03 / GPIO_212	I/O	3V3	CAM 1 Data 3 **or** CAM 0 Data 3 **or** GPIO
81	CAM_5	GPIO	CAM_5_DAT07 / GPIO_014	I/O	VDD_SD2	CAM 5 Data 7 **or** GPIO
83			CAM_5_DAT06 / GPIO_013	I/O	VDD_SD2	CAM 5 Data 6 **or** GPIO
85			CAM_5_DAT05 / GPIO_012	I/O	VDD_SD2	CAM 5 Data 5 **or** GPIO
87		SD2	CAM_5_DAT03 / SD_2_DAT02 / GPIO_010	I/O	VDD_SD2	CAM 5 Data 3 **or** SDIO 2 Data 2 **or** GPIO
89			CAM_5_DAT01 / SD_2_DAT00 / GPIO_008	I/O	VDD_SD2	CAM 5 Data 1 **or** SDIO 2 Data 0 **or** GPIO
91	LCD_1	CAM_2	LCD_1_DAT00 / CAM_2_DAT02 / GPIO_183	I/O	3V3	LCD 1 Data 0 **or** CAM 2 Data 2 **or** GPIO
93			LCD_1_DAT01 / CAM_2_DAT03 / GPIO_184	I/O	3V3	LCD 1 Data 1 **or** CAM 2 Data 3 **or** GPIO
95			LCD_1_DAT02 / CAM_2_DAT04 / GPIO_185	I/O	3V3	LCD 1 Data 2 **or** CAM 2 Data 4 **or** GPIO
97			LCD_1_DAT03 / CAM_2_DAT05 / GPIO_186	I/O	3V3	LCD 1 Data 3 **or** CAM 2 Data 5 **or** GPIO
99			LCD_1_DAT04 / CAM_2_DAT06 / GPIO_187	I/O	3V3	LCD 1 Data 4 **or** CAM 2 Data 6 **or** GPIO
101		CAM_3	LCD_1_DAT06 / CAM_3_CLK / GPIO_189	I/O	3V3	LCD 1 Data 6 **or** CAM 3 Clock **or** GPIO
103			LCD_1_DAT08 / CAM_3_DAT01 / GPIO_191	I/O	3V3	LCD 1 Data 8 **or** CAM 3 Data 1 **or** GPIO
105			LCD_1_DAT10 / CAM_3_DAT03 / GPIO_193	I/O	3V3	LCD 1 Data 10 **or** CAM 3 Data 3 **or** GPIO
107			LCD_1_DAT12 / CAM_3_DAT05 / GPIO_195	I/O	3V3	LCD 1 Data 12 **or** CAM 3 Data 5 **or** GPIO
109	GND			P	Gnd	Ground
111	LCD_1	CAM_2	LCD_1_CLK / CAM_2_DAT01 / GPIO_182	I/O	3V3	LCD 1 Clock **or** CAM 2 Data 1 **or** GPIO
113	GND			P	Gnd	Ground
115	LCD_1	CAM_3	LCD_1_DAT14 / CAM_3_DAT07 / GPIO_197	I/O	3V3	LCD 1 Data 14 **or** CAM 3 Data 7 **or** GPIO
117		CAM_4	LCD_1_DAT16 / CAM_4_DAT00 / GPIO_199	I/O	3V3	LCD 1 Data 16 **or** CAM 4 Data 0 **or** GPIO
119			LCD_1_DAT18 / CAM_4_DAT02 / GPIO_201	I/O	3V3	LCD 1 Data 18 **or** CAM 4 Data 2 **or** GPIO
121			LCD_1_DAT19 / CAM_4_DAT03 / GPIO_202	I/O	3V3	LCD 1 Data 19 **or** CAM 4 Data 3 **or** GPIO
123			LCD_1_DAT20 / CAM_4_DAT04 / GPIO_203	I/O	3V3	LCD 1 Data 20 **or** CAM 4 Data 4 **or** GPIO
125			LCD_1_DAT21 / CAM_4_DAT05 / GPIO_204	I/O	3V3	LCD 1 Data 21 **or** CAM 4 Data 5 **or** GPIO
127			LCD_1_DAT22 / CAM_4_DAT06 / GPIO_205	I/O	3V3	LCD 1 Data 22 **or** CAM 4 Data 6 **or** GPIO
129			LCD_1_DAT23 / CAM_4_DAT07 / GPIO_206	I/O	3V3	LCD 1 Data 23 **or** CAM 4 Data 7 **or** GPIO
131	LCD_1	GPIO	LCD_1_RSTn_Touch / CAM_0_VS / GPIO_154	I/O	3V3	LCD 1 Resetn_Touch Screen **or** CAM 0 VS **or** GPIO
133			LCD_1_IT_TouchScreen / CAM_0_HS / GPIO_155	I/O	3V3	LCD 1 IT Touch Screen **or** CAM 0 HS **or** GPIO
135			LCD_1_BKL_En / CAM_5_VS / GPIO_160	I/O	3V3	LCD 1 Backlight Enable **or** CAM 5 VS **or** GPIO
137			LCD_1_RSTn / CAM_5_HS / GPIO_161	I/O	3V3	LCD 1 Resetn **or** CAM_5_HS **or** GPIO
139	GND			P	Gnd	Ground

Pin			Function	Type	Power Domain	Description
2	GND			P	Gnd	Ground
4	3V3_MAIN		3V3_MAIN	P	3V3	Power supply : 3v3
6			3V3_MAIN			
8			3V3_MAIN			
10			3V3_MAIN			
12	USB_1		USB_1_DP	I/O		USB 1 Data +
14			USB_1_DN	I/O		USB 1 Data -
16	GND			P	Gnd	Ground
18	BOOT		BOOT	I	3V3	Initial Flashing pin
20	PWR_En		Power_En	I	3V3	Power Enable
22	Power VDD_ETH & GPIO		VDD_ETH INPUT	I	1v8 / 3v3	Power Supply Ethernet 1v8 / 2v5 / 3v3 or GPIO
24	Ethernet RGMII	GPIO	ETH_RGMII_TXD_01 / GPIO_140	I/O	VDD_ETH	GPIO **or** Ethernet RGMII Tx Data 1
26			ETH_RGMII_TXD_03 / GPIO_142	I/O	VDD_ETH	GPIO **or** Ethernet RGMII Tx Data 3
28			ETH_RGMII_RXD_01 / GPIO_146	I/O	VDD_ETH	GPIO **or** Ethernet RGMII Rx Data 1
30			ETH_RGMII_RXD_03 / GPIO_148	I/O	VDD_ETH	GPIO **or** Ethernet RGMII Rx Data 3
32			ETH_RGMII_TX_CLK / GPIO_138	I/O	VDD_ETH	GPIO **or** Ethernet RGMII Tx Clock
34			ETH_MDC / GPIO_150	I/O	VDD_ETH	GPIO **or** Ethernet RGMII
36			ETH_MDIO / GPIO_151	I/O	VDD_ETH	GPIO **or** Ethernet RGMII
38	Ethernet MII	SPI	SPI_16 / ETH_MII TXER / GPIO_134	I/O	VDD_ETH	SPI CLK **or** Ethernet MII **or** GPIO
40			SPI_17 / ETH_MII RXER / GPIO_135	I/O	VDD_ETH	SPI MOSI **or** Ethernet MII **or** GPIO
42			SPI_18 / ETH_MII CRS / GPIO_136	I/O	VDD_ETH	SPI SS **or** Ethernet MII **or** GPIO
44			SPI_19 / ETH_MII COL / GPIO_137	I/O	VDD_ETH	SPI MISO **or** Ethernet MII **or** GPIO
46	GND			P	Gnd	Ground
48	AAI	PWM	AAI_14 / GPIO_133 / PWM_14	I/O	3V3	GPIO **or** AAI **or** PWM
50			AAI_12 / GPIO_131 / PWM_12	I/O	3V3	GPIO **or** AAI **or** PWM
52			AAI_11 / GPIO_130 / PWM_11	I/O	3V3	GPIO **or** AAI **or** PWM
54			AAI_10 / GPIO_129 / PWM_10	I/O	3V3	GPIO **or** AAI **or** PWM
56		SPI [0:7] Part 2	SPI_03 / GPIO_080 / AAI_18 / CAN0_RX	I/O	3V3	GPIO **or** AAI **or** SPI
58			SPI_02 / GPIO_079 / AAI_17 / CAN0_TX	I/O	3V3	GPIO **or** AAI **or** SPI
60	GND			P	Gnd	Ground
62	I2C_1		I2C_1_DAT / GPIO_061	I/O	3V3	I2C 1 Data **or** GPIO
64	I2C_2		I2C_2_DAT / GPIO_059	I/O	3V3	I2C 2 Data **or** GPIO
66	SD1	UART 5	SD_1_CMD / UART_5_RX	I/O	VDD_SD1	SDIO 1 Command **or** UART 5 RX
68			SD_1_CLK / UART_5_TX	I/O	VDD_SD1	SDIO 1 Clock **or** UART 5 TX
70		UART 7	SD_1_DAT03 / UART_7_RX	I/O	VDD_SD1	SDIO 1 Data 3 **or** UART 7 RX
72			SD_1_DAT02 / UART_7_TX	I/O	VDD_SD1	SDIO 1 Data 2 **or** UART 7 TX
74		UART 6	SD_1_DAT01 / UART_6_RX	I/O	VDD_SD1	SDIO 1 Data 1 **or** UART 6 RX
76			SD_1_DAT00 / UART_6_TX	I/O	VDD_SD1	SDIO 1 Data 0 **or** UART 6 TX
78	GND			P	Gnd	Ground
80	CAM_1	CAM_0 (16 bits)	CAM_1_DAT10 / CAM_0_DAT02 / GPIO_211	I/O	3V3	CAM 1 Data 2 **or** CAM 0 Data 2 **or** GPIO
82			CAM_1_DAT09 / CAM_0_DAT01 / GPIO_210	I/O	3V3	CAM 1 Data 1 **or** CAM 0 Data 1 **or** GPIO
84			CAM_1_DAT08 / CAM_0_DAT00 / GPIO_209	I/O	3V3	CAM 1 Data 0 **or** CAM 0 Data 0 **or** GPIO
86		GPIO	CAM_1_CLK / GPIO_217	I/O	3V3	CAM 1 Clock **or** GPIO
88	CAM_5	SD2	CAM_5_DAT04 / SD_2_DAT03 / GPIO_011	I/O	VDD_SD2	CAM_5_DAT04 **or** SDIO 2 Data 3 **or** GPIO
90			CAM_5_DAT02 / SD_2_DAT01 / GPIO_009	I/O	VDD_SD2	CAM_5_DAT02 **or** SDIO 2 Data 1 **or** GPIO
92			CAM_5_DAT00 / SD_2_CMD / GPIO_007	I/O	VDD_SD2	CAM_5_DAT00 **or** SDIO 2 Command **or** GPIO
94	GND			P	Gnd	Ground
96	CAM_5	SD2	CAM_5_CLK / SD_2_CLK / GPIO_006	I/O	VDD_SD2	CAM_5_CLK **or** SDIO 2 Clock **or** GPIO
98	Power VDD_SD2_CAM_5		VDD_SD2_CAM5 INPUT	P	1v8 / 3v3	Power Supply SDIO2 and Camera 5
100	LCD_1	CAM_2	LCD_1_DAT05 / CAM_2_DAT07 / GPIO_188	I/O	3V3	LCD 1 Data 05 **or** CAM 2 Data 7 **or** GPIO
102		CAM_3	LCD_1_DAT07 / CAM_3_DAT00 / GPIO_190	I/O	3V3	LCD 1 Data 07 **or** CAM 3 Data 0 **or** GPIO
104			LCD_1_DAT09 / CAM_3_DAT02 / GPIO_192	I/O	3V3	LCD 1 Data 09 **or** CAM 3 Data 2 **or** GPIO
106			LCD_1_DAT11 / CAM_3_DAT04 / GPIO_194	I/O	3V3	LCD 1 Data 11 **or** CAM 3 Data 4 **or** GPIO
108			LCD_1_DAT13 / CAM_3_DAT06 / GPIO_196	I/O	3V3	LCD 1 Data 13 **or** CAM 0 Data 6 **or** GPIO
110		CAM_4	LCD_1_DAT15 / CAM_4_CLK / GPIO_198	I/O	3V3	LCD 1 Data 15 **or** CAM 4 Clock **or** GPIO
112			LCD_1_DAT17 / CAM_4_DAT01 / GPIO_200	I/O	3V3	LCD 1 Data 17 **or** CAM 4 Data 1 **or** GPIO
114		GPIO	LCD_1_DEN / GPIO_207	I/O	3V3	LCD 1 Data Enable **or** GPIO
116		CAM_2	LCD_1_HS / CAM_2_CLK / GPIO_180	I/O	3V3	LCD 1 HS **or** CAM 2 Clock **or** GPIO
118			LCD_1_VS / CAM_2_DAT00 / GPIO_181	I/O	3V3	LCD 1 VS **or** CAM 2 Data 0 **or** GPIO
120	GND			P	Gnd	Ground
122	CAM_0	LCD_0	CAM_0_CLK / LCD_0_CLK / GPIO_179	I/O	3V3	CAM 0 Clock **or** LCD 0 Clock **or** GPIO
124			CAM_0_DAT08 / LCD_0_DAT08 / GPIO_163	I/O	3V3	CAM 0 Data 08 **or** LCD 0 Data 0 **or** GPIO
126			CAM_0_DAT09 / LCD_0_DAT09 / GPIO_164	I/O	3V3	CAM 0 Data 09 **or** LCD 0 Data 1 **or** GPIO
128			CAM_0_DAT10 / LCD_0_DAT10 / GPIO_165	I/O	3V3	CAM 0 Data 10 **or** LCD 0 Data 2 **or** GPIO
130			CAM_0_DAT11 / LCD_0_DAT11 / GPIO_166	I/O	3V3	CAM 0 Data 11 **or** LCD 0 Data 3 **or** GPIO
132			CAM_0_DAT12 / LCD_0_DAT12 / GPIO_167	I/O	3V3	CAM 0 Data 12 **or** LCD 0 Data 4 **or** GPIO
134			CAM_0_DAT13 / LCD_0_DAT13 / GPIO_168	I/O	3V3	CAM 0 Data 13 **or** LCD 0 Data 5 **or** GPIO
136			CAM_0_DAT14 / LCD_0_DAT14 / GPIO_169	I/O	3V3	CAM 0 Data 14 **or** LCD 0 Data 6 **or** GPIO
138			CAM_0_DAT15 / LCD_0_DAT15 / GPIO_170	I/O	3V3	CAM 0 Data 15 **or** LCD 0 Data 7 **or** GPIO
140	GND			P	Gnd	Ground

5.1.4.1 Pin number definition

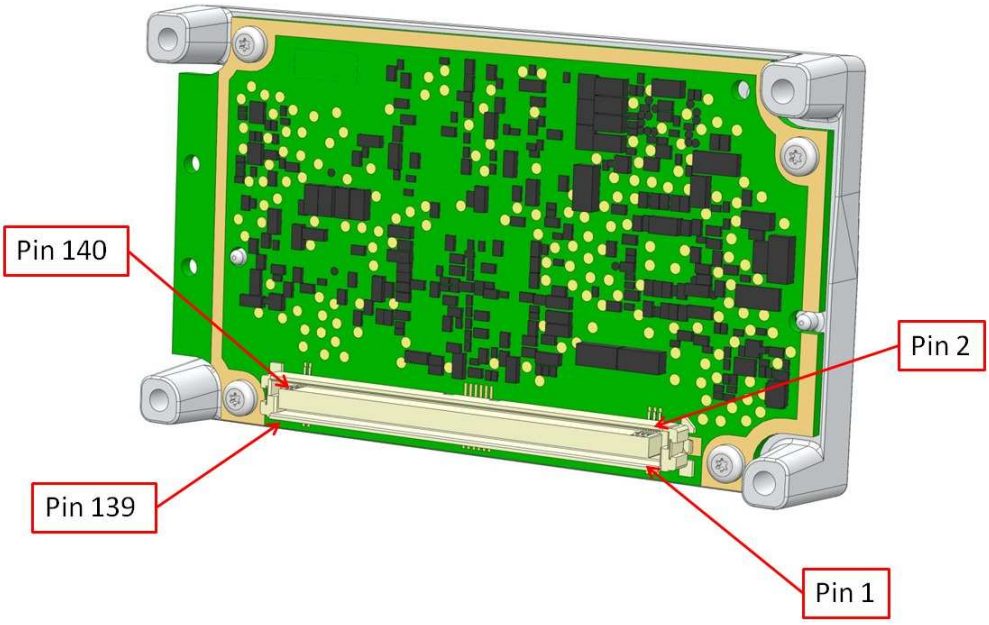

5.1.5 RF connectors location

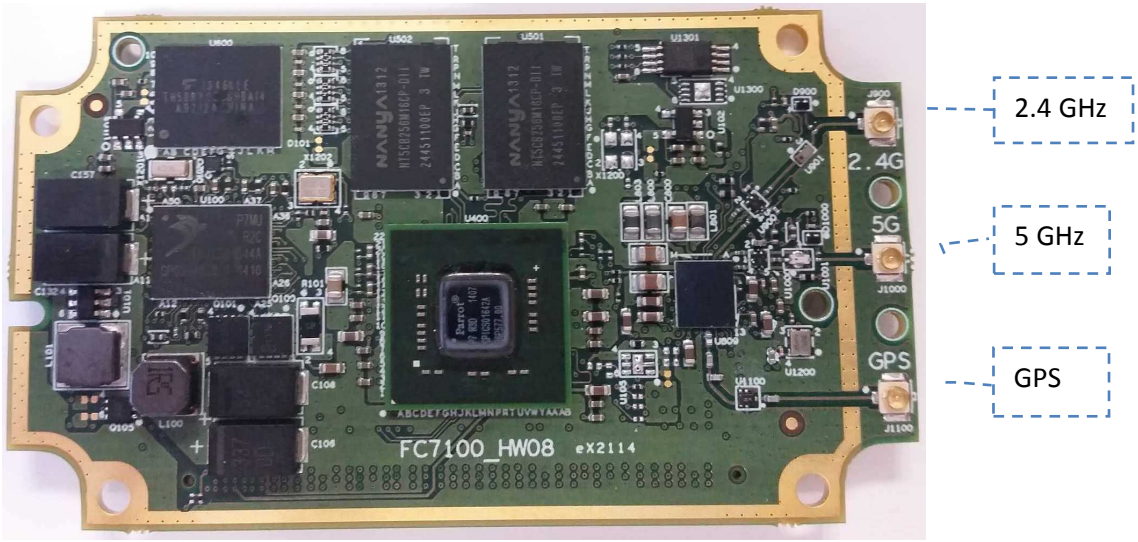

5.2 Power supplies & management

FC7100's processor's digital I/O are mainly referenced to a 3,3V voltage,
Ethernet interface can be configured either in 1,8V, 2,5V or 3,3V.
SDCard 1 & 2 can be configured either in 1,8Vor 3,3V voltage.
Camera 5 (CAM_5) can be configured either in 1,8Vor 3,3V voltage.
UART 5,6 & 7 can be configured either in 1,8Vor 3,3V voltage.

5.2.1 Absolute maximum ratings

Operating temperature range ..... -40°C to +85°C
Storage temperature range ..... -40°C to +105°C
DC input supply voltage (3v3 power domain) 3,6V
DC input supply voltage (2v5 power domain) 2,75V
DC input supply voltage (1v8 power domain) 1,95V

5.2.2 External power supplies

- **3V3_MAIN**

To operate, the module requires a unique 3V3 voltage power supply capable to deliver up to 4 A.
Recommendation on power management (3v3_MAIN) near the connector: 1x47uF and 1x22uF capacitor.
3v3_PERM must always be present before (and during) 3v3_MAIN power supply.

- **3V3_PERM**

In case where RTC (Real Time Clock) option is needed, for time-keeping, the motherboard must permanently supply the 3V3_PERM pin of the board with an independent 3V3 voltage.
In case where RTC option isn't needed, the 3V3_PERM and the 3V3_MAIN can be connected together on a same 3,3V supply on the motherboard.

- **VDD_ETH**

For customers who want to configure the Ethernet interface with 1,8V, 2,5V or 3,3V I/O voltage, the module requires to be powered with a 1,8V, 2,5V or 3,3V external power supply.

- **VDD_SD1_UART_5_6_7**

For customers who want to configure the Ethernet interface with 1,8V, 2,5V or 3,3V I/O voltage, the module requires to be powered with a 1,8V, 2,5V or 3,3V external power supply.

- **VDD_SD2_CAM5**

For customers who want to configure the Ethernet interface with 1,8V, 2,5V or 3,3V I/O voltage, the module requires to be powered with a 1,8V, 2,5V or 3,3V external power supply.

5.3 External communication interfaces

FC7100 module uses several means to interface with the system it is integrated in.

5.3.1 Digital IO Pins

The FC7100 I/Os belong to 3 different digitals power domains: 1,8V, 2,5V or 3,3V power supplies.
The transmission line must be adapted to 50 ohm, at all available frequencies
VDDO is the generic power supply name of the power domain. It can represent 3V3_MAIN, VDD_ETH, VDD_SD1 or VDD_SD2.

5.3.1.1 3,3V power domain

(Condition: VDD = 3.3v)

Parameter	Min	Typ	Max	Unit
Input Low Voltage VIL	0	-	0,8	V
Input High Voltage VIH	2,0	-	VDDO	V
Low Level Output Voltage VOL	0	-	0,4	V
High Level Output Voltage VOH	2,4	-	VDDO	V
Max Output Current		-		mA

Please note that it is forbidden to apply a VIH on an unpowered GPIO, so when its VDDO isn't supplied.

5.3.1.2 2,5V power domain

(Condition: VDD = 2.5v)

Parameter	Min	Typ	Max	Unit
Input Low Voltage VIL	0	-	0,7	V
Input High Voltage VIH	1,7	-	VDDO	V
Low Level Output Voltage VOL	0	-	0,4	V
High Level Output Voltage VOH	2	-	VDDO	V
Max Output Current		-		mA

Please note that it is forbidden to apply a VIH on an unpowered GPIO, so when its VDDO isn't supplied.

5.3.1.3 1,8V power domain

(Condition: VDD = 1.8v)

Parameter	Min	Typ	Max	Unit
Input Low Voltage VIL	0	-	0,54	V
Input High Voltage VIH	1,26	-	VDDO	V
Low Level Output Voltage VOL	0	-	0,4	V
High Level Output Voltage VOH	1,4	-	VDDO	V
Max Output Current		-		mA

Please note that it is forbidden to apply a VIH on an unpowered GPIO, so when its VDDO isn't supplied.

5.3.2 I2C

Supports 100kb/s, 400kb/s, 1Mb/s and 3,4Mb/s speeds in master mode and 100kb/s, 400kb/s in slave mode,
I2C is an Open Drain protocol. External pull-up to VDDO are needed. The pull-up shouldn't be supplied if the corresponding VDDO to the I2C pads isn't powered.

- **I2C_1**

I2C_1 is a 3,3V signaling I2C link dedicated to be used on motherboard,
It can operate as a master or as a slave,

Note: On WB_FC7xxx development board, I2C_0 is used for Touch Panel Controller, external audio codec & audio power amplifier interface,

- **I2C_2**

I2C_2 is 3,3V signaling at the connector end,
It can operate as a master or as a slave,

Note: On WB_FC7xxx board, I2C_1 is used for iPOD authentication chip communication,

5.3.3 UART

The UARTs are Universal Asynchronous Receiver-Transmitter, commonly used in conjunction with communication standards such as EIA, RS-232, RS-422 or RS-485. The maximum speed of this interface is 3MHz, with flow control signals.

- **UART_0 :** UART 0 is a standard UART interface (Rx & Tx signals), with flow control signals (RTS & CTS),
- **UART_5, 6 and 7** have only Rx and Tx signals,

5.3.4 PWM

Up to 16 PWM outputs are available. They support frequencies from 0,06Hz to 65MHz with a programmable duty cycle or from 3,97kHz to 130MHz with a 50% duty cycle.

5.3.4

5.3.5 SDIO

5.3.4

SDIO_1 is a complete SD Card bus, compliant with SDIO v3.0 specification part.
It supports SD High Capacity (SDHC), SD High Speed (SDHS) and SD eXtended Capacity (SDXC) cards standard.

5.3.4

It is also used as secondary flash update interface.

5.3.4

5.3.4

- **SDIO_1**

SDIO_1 is multiplexed with UART_5, 6 and 7,

- **SDIO_2**

SDIO_2 is multiplexed with CAM5.

SDIO_1 and SDIO_2 are compliant Default speed, High Speed, SDR12, SDR25, SD50 and DDR50 mode.

To be compliant to UHS-1 mode, an external power supply to switch between 3v3 to 1v8 is necessary. See section xx for an architecture example.

The maximum bus speed depends of the layout length and impedance.
The transmission line must be adapted to 50 ohm, at all available frequencies. It's recommend support maximum total capacitor load C_L of about 15pF for UHS104 card and about 30pF for UHS50 card.

5.3.6 USB

5.3.6.1 USB_0

USB_0 is a host or device USB interface compliant with USB2.0 High Speed Specifications.
The VBUS_0 pin is an input signal.
When USB_0 are host, the power Supply VBUS_0 (5V) must be generate by the motherboard.
The pin "5" USB_0_VBUS of main connector must be connect to this external power supply VBUS.

5.3.6.2 USB_1

USB_1 is a host only USB interface compliant with USB2.0 High Speed Specifications.
The power Supply VBUS (5V) must be generate by the motherboard.
The module doesn't need to receive this voltage.

5.3.7 SPI

FC7100 has 4 SPI interfaces.

5.3.7.1 SPI_0

SPI_0 is multiplexed with the Ethernet interface (same VDDO voltage).

5.3.7.2 SPI_1, 2 and 3

SPI1,2 and 3 do operate as a master or a slave on a 3,3V bus. Its maximum clock frequency is 48 MHz.

5.3.8 MPEG TS

FC7100 has 2 Transport Stream MPEG interfaces.

5.3.9 Ethernet

Ethernet interface is compatible with a MII PHY interface from 802.3-2008 or a RGMII PHY interface from HP/Marvell specification version 2.6.

5.3.10 Audio interfaces

FC7100 module provides digital audio interface only.
The digital audio interface of the FC7100 is composed of 16 pads, that can be configured in various combination, allowing the use of interfaces I2S input and output, TDM inputs and outputs, PCM inputs and outputs, SPDIF inputs and outputs, The configuration cannot exceed the following:

- I2S inputs: 8 Stereo (4 of them can be configured as SPDIF-audio)
- I2S outputs: 4 Stereo
- TDM inputs: 1 Quad or 1 Octo
- TDM outputs: 1 Quad or 1 Octo
- PCM inputs/outputs: 2
- SPDIF inputs: 1 binary input (+ the 4 SPDIF/audio mentioned above)
- SPDIF outputs: 1 binary output

Providing a complete I2S interface (bit clock, left/right clock & master clock), FC7100 operates as master of the bus for an external audio codec on motherboard.

If needed, FC7100 I2S interface can be set as slave if the motherboard provides the needed clock signals: master clock & Left/Right clock.
Note: If FC7100 is configured as slave, all the I2S I/O will be synchronized on the motherboard clock.

If another I2S master interface must be connected to FC7100, the FC7100 can synchronize the I2S data with the left/right clock.

5.3.11 Video interfaces

FC7100 features input & output video flow management,

5.3.11.1 Display interfaces

FC7100 has two display interfaces:

- LCD_1:
  - 24 bits, ITU_656 & ITU_601, 1080p,
  - 16 or 8 bits, ITU_656 & ITU_601
  - 3,3V signalling targeting LCD Panel use: It includes Horizontal & Vertical synchronization signals and can also be used with Data Enable signal only,

- LCD_0: 8 bits, ITU_656 & ITU_601, 720p multiplexed with CAM_0,

5.3.11.2 Record interfaces

FC7100 has three record interfaces:

- **CAM_0:**
  8 bits, ITU_656 & ITU_601, 720p

or
16 bits, ITU_656 & ITU_601, 1080p
(When CAM_0 is on 16 bits interface, CAM_1 cannot be used)

- **CAM_1**:
  8 bits, ITU_656 & ITU_601, 720p

- **CAM_5**:
  8 bits, ITU_656 & ITU_601, 720p

- **CAM_2**, **CAM_3** and **CAM_4** (when LCD_1 is not used)
  8 bits, ITU_656, 720p

5.3.11.3 **Display and record interface option.**

The input/ouput video interfaces are multiplexed on the main FC7100 connector. (See paragraph: 1.1.4 Pinout Table)

- **LCD_1 :** Many display and record interface option are available:
  - **Config #1** : LCD 24 bits (1080p)
  - **Config #2** : LCD 16 bits (1080p) + CAM 8 bits (720p)
  - **Config #3** : LCD 8 bits (720p) + 2 x CAM 8 bits (720p)
  - **Config #4** : 3 x CAM 8 bits (720p)

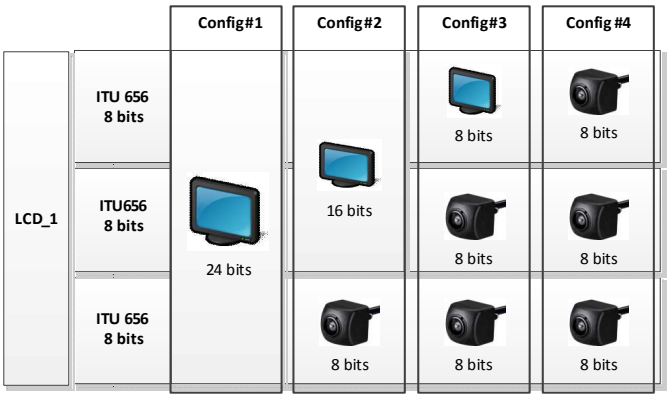

- **CAM_0 and CAM_1 :** Many display and record interface option are available:
  - **Config #a** : 2 x CAM 8 bits (720p)
  - **Config #b** : 1 x CAM 16 bits (1080p)
  - **Config #c** : LCD 8 bits (720p) + CAM 8 bits (720p)

CAM_0 can be used on ITU601.

- **CAM_5 :**
  - **Config #α** : 1 x CAM 8 bits (720p)
  - **Config #β** : 1 x SDIO interface (SD XC compatible)

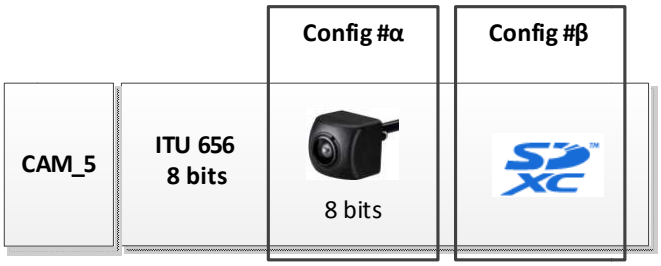

In summary, all options are below :

- LCD 24 bits (1080p) + 3xCAM 8 bits (720p)
- LCD 24 bits (1080p) + LCD 8 bits (720p) + 2xCAM 8 bits (720p)
- LCD 24 bits (1080p) + CAM 16 bits (1080p) + CAM 8 bits (720p)
- LCD 16 bits (1080p) + 4 x CAM 8 bits (720p)
- LCD 16 bits (1080p) + CAM 16 bits (1080p) + 2 x CAM 8 bits (720p)
- LCD 16 bits (1080p) + LCD 8 bits (720p) + 3 x CAM 8 bits (720p)
- LCD 8 bits (720p) + 5 x CAM 8 bits (720p)
- LCD 8 bits (720p) + CAM 16 bits (1080p) + 3 x CAM 8 bits (720p)
- LCD 8 bits (720p) + LCD 8 bits (720p) + 4 x CAM8 bits (720p)
- 6 x CAM 8 bits (720p)
- CAM 16 bits (1080p) + 4 x CAM 8 bits (720p)

5.3.12 IO configuration

The GPIO interface provides programmable general input/output configurable. Interrupt lines available on any edge or polarity event. Each source can be selected among all the GPIOs.
Each pads have programmable :

- Drive strength : can be programmed from 2.93mA to 17.24mA during pull-up and 2.68mA to 16.17mA during pull down.

- Slew Rate: The slew rate is defined as the maximum rate of change of the output voltage.

- Keeper: enable or disable keeper mode. Holds last value on a tri-state bus.

- Pull-down or Pull-up: active an internal pull-down or pull-up.

Parameter	Min.	Typ	Max.	Unit
Pull Up impedance	27	30	34	kOhm
Pull Down impedance	27	30	34	KOhm

- Schmitt trigger: enable or disable Schmitt Trigger.

6 Mechanical

6.1 Outline dimensions

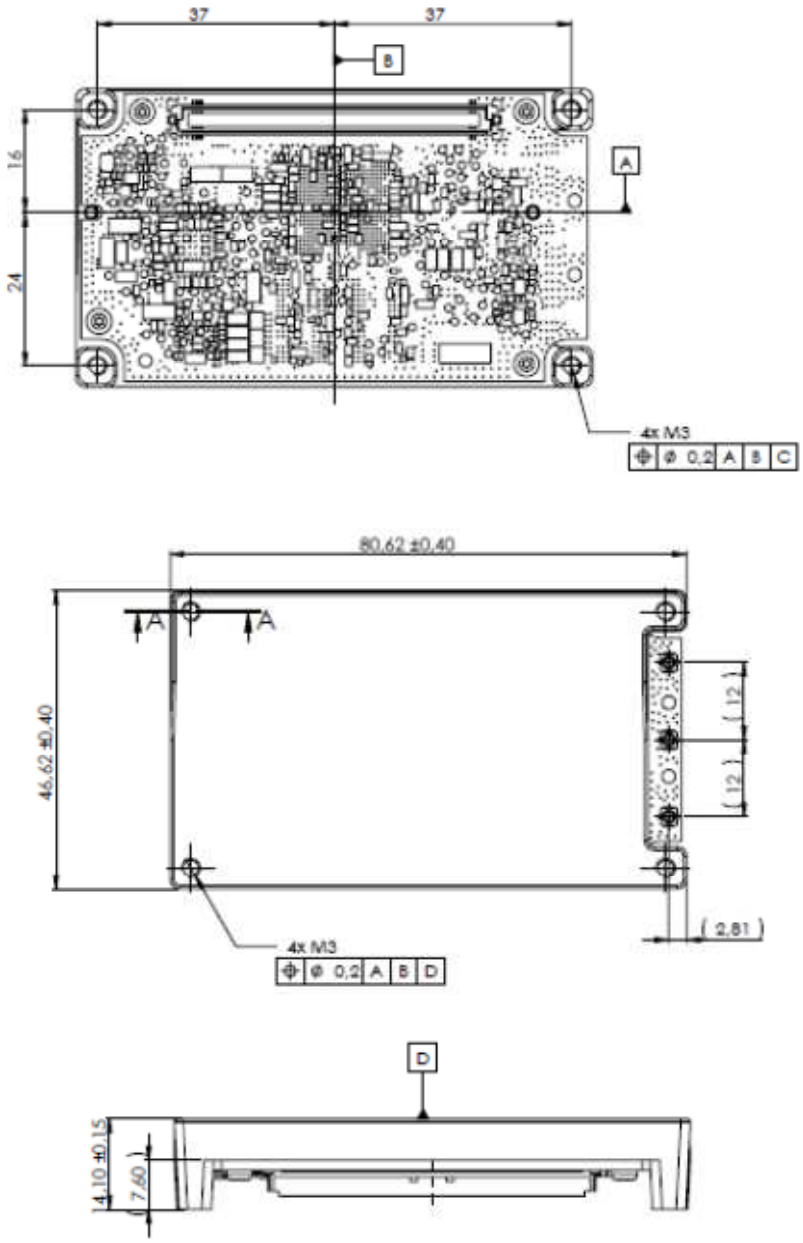

Weight: 51 g

6.2 Motherboard PCB layout

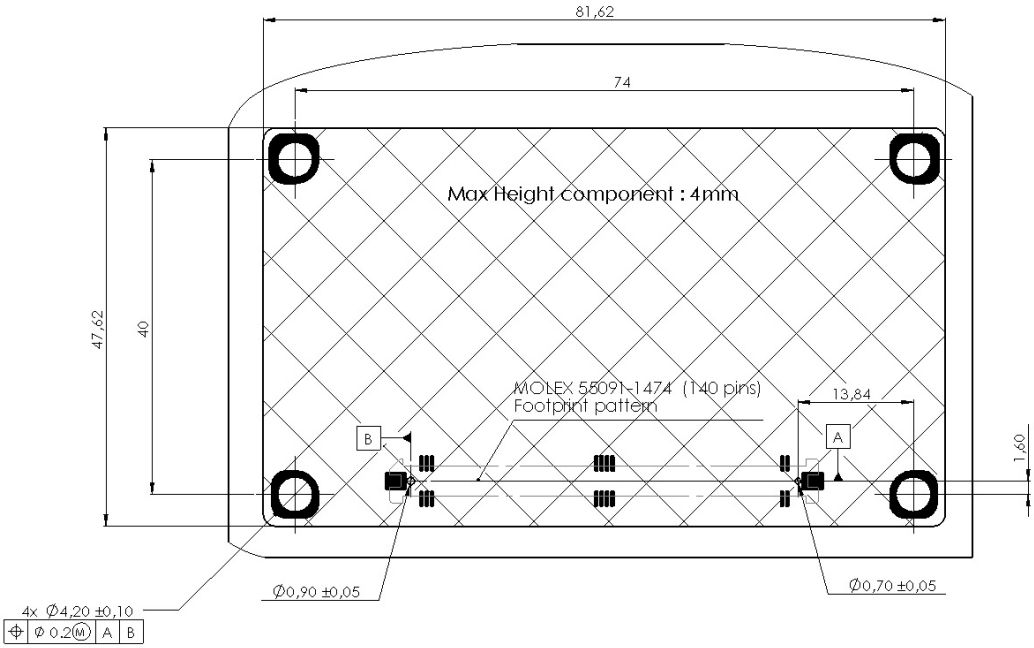

The module's interface is made through a 140-pin board to board connector with a 0,635 mm pitch

•

6.3 Connectors

6.3.1 FC7100 Main connector

The module's interface with host systems is made through a 140-pin board to board connector with a 0.635mm pitch.

- Module connector reference: MOLEX 52885-1474
- Motherboard connector's reference: MOLEX 55091- 1474

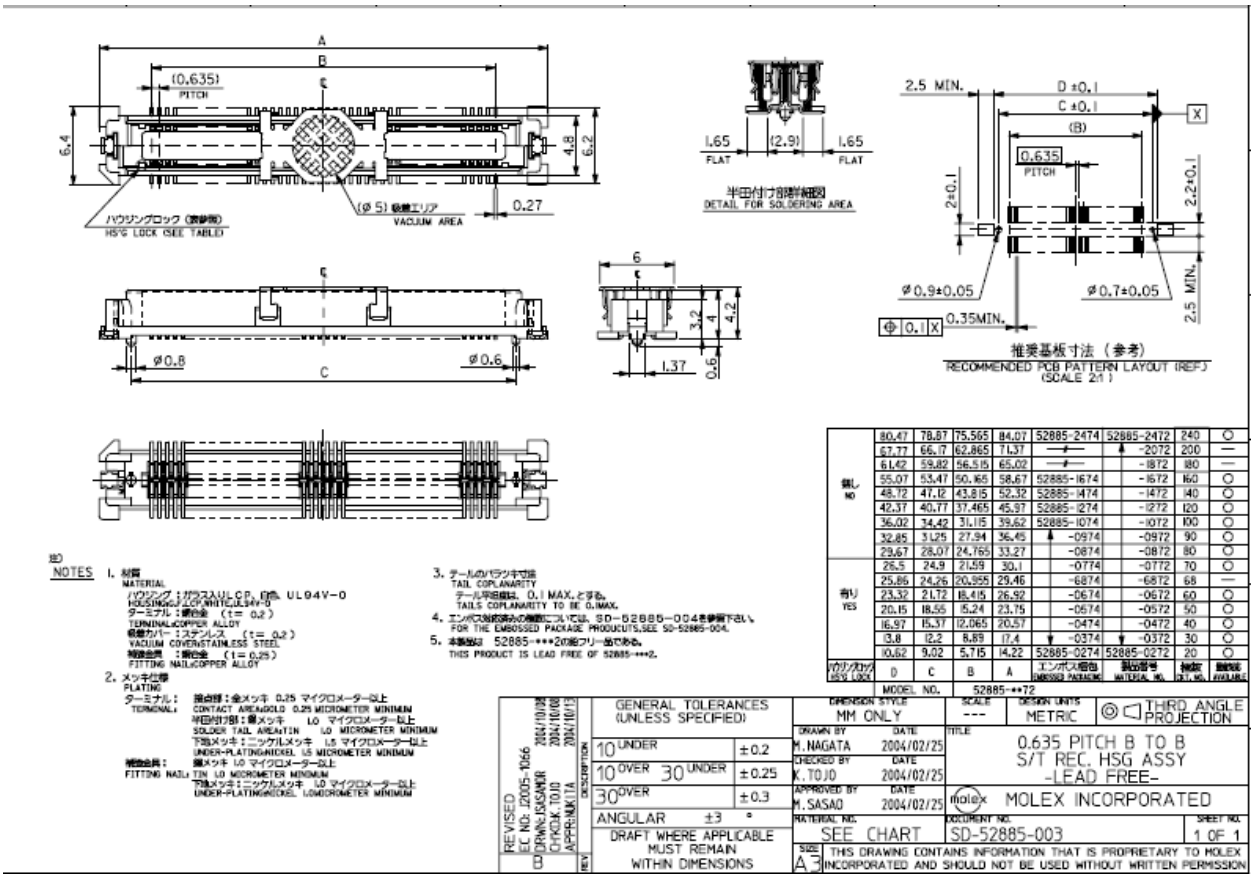

6.3.2 BT, WLAN and GPS external antenna connectors

Theses RF connectors are of ultra-small coaxial type:

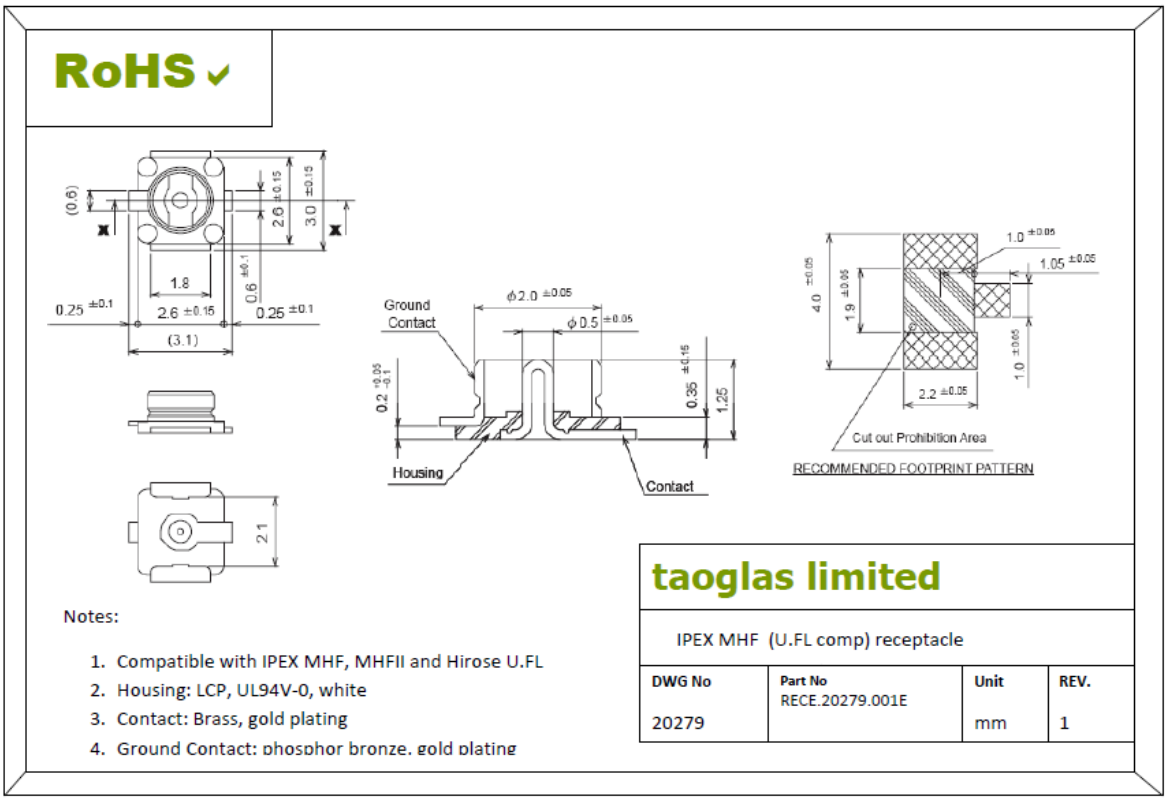

6.4 Thermal integration guidelines (TBC)

The local maximum ambient air temperature ($T_{amb\ max}$ = 85°C) can be supported by thermal dissipation system (example: heatsink) with:

$$\theta sa \leq 1\ °C/W$$

(θsa is the thermal resistance thermal dissipation system to ambient)

Thermal interface materials (TIM), which are used between the thermal dissipation system and the interface casing, can be of many kinds, including greases, gels, adhesives, tapes, silicon rubber materials, and special thermoplastic adhesives.

Thermal dissipation system can be attached directly to the interface casing with using M3 hole fixation on the top of casing.

7 Available Tools

7.1 Workbench

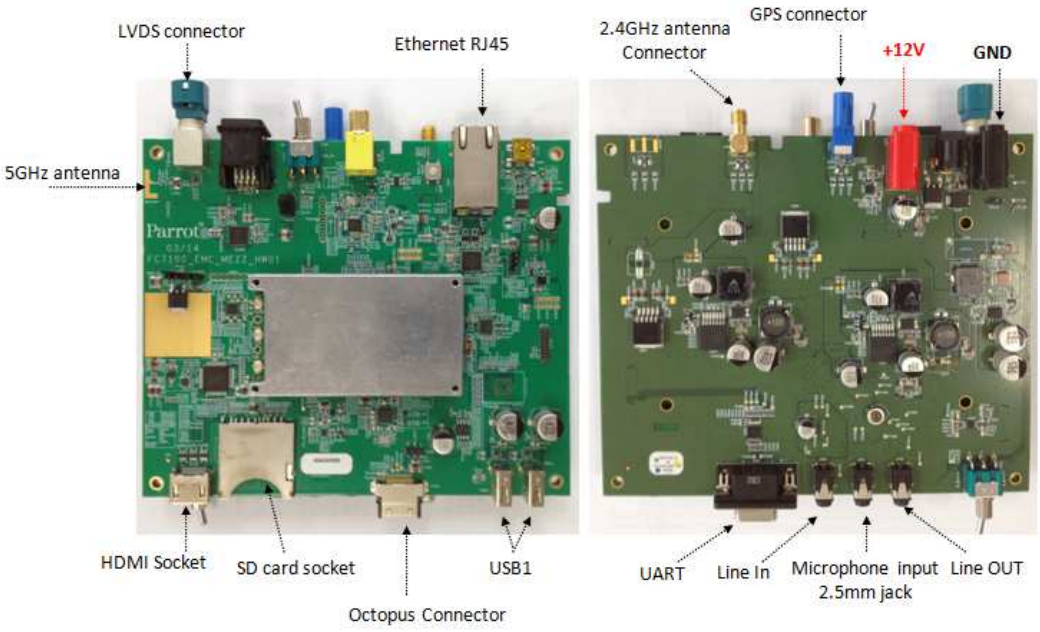

8 Marking

8.1 Module Marking

8.1.1 Label

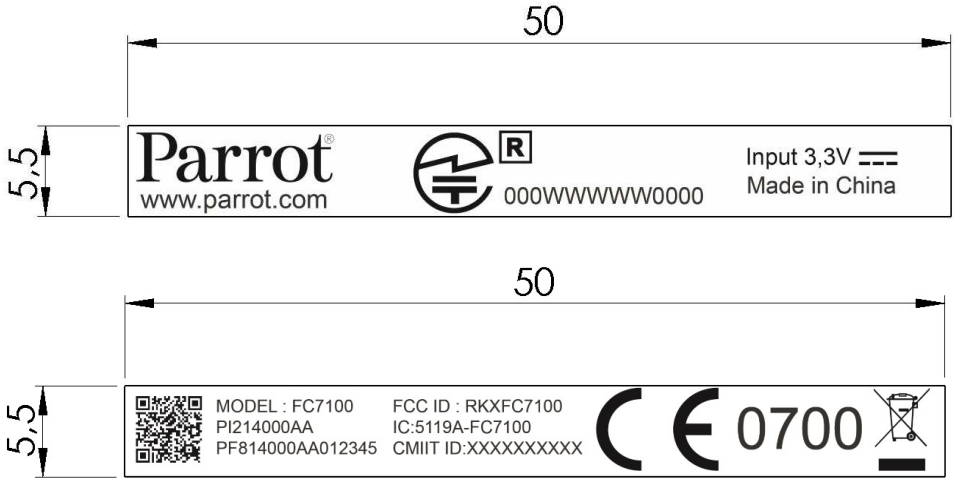

The TELEC / Japan certification number is not the relevant one. It is just an example for placement on the label. It will be printed and updated when final number is available. ***Until that time, neither the logo nor the number will be printed.***

8.1.2 Position and Orientation on module

9 Caution for use

9.1 ESD Compliance

Operator must use ESD protection gloves for Module Manipulation. In case of electrical discharge, Module must be scrapped.

9.2 Safety

Mechanical shield is made of metal and have several draft angle on RF connectors which can cause Human injuries. Operator must be trained on how to manipulate it.

9.3 Assembly

Key mechanical dimensions are tested before shipment.

In case of manual handling or operation, to avoid any issue with mechanical distance between legs and ensure a good insertion in the host side, packaging has been designed to ensure that operator will pick up the part by the most adequate area of the module. Operator should be trained and alerted about this specific behavior.

9.4 Drop

In case the part drop to the floor, Parrot doesn't warrant the part. Part has to be scrapped. Same process applies in our manufacturing site.

10 APPROVAL / CERTIFICATIonS

10.1 Normative informations

F7100 module certifications identifications :

CERTIFICATION	ID
Bluetooth	QD ID:
CE	CE 0700
FCC	RKXFCC7100
IC	5119A-FC7100
TELEC	Not yet available

10.2 FCC and IC requirements for module application

Identifications:
FCC ID: RKXFC7100
IC : 5119A-FC7100

In accordance with FCC Part 15, the FC7100 is listed as a limited Modular Transmitter device.

USA – User information

<u>This intends to inform how to specify the FCC ID of our module "FC7100" on the final product:</u>

Based on the Public Notice from FCC, the host device should have a label which indicates that it contains our module.

The label should use wording such as: "Contains FCC ID: RKXFC7100". Any similar wording that expresses the same meaning may be used.

The label of the host device should also include the below FCC statements When it is not possible, this information should be included in the User Manual of the host device:

"*This device complies with part 15 of the FCC rules. Operation is subject to the following two conditions.*

(1) This device may not cause harmful interference
(2) This device must accept any interference received, including interference that may cause undesired operation.

Caution: Changes or modifications not expressly approved by the party responsible for compliance could void the user's authority to operate the equipment.

This equipment has been tested and found to comply with the limits for a class B digital device, pursuant to part 15 of the FCC Rules. These limits are designed to provide a reasonable protection against harmful interference in a residential installation. This equipment generates, uses and can radiate radio frequency energy and, if not installed and uses in accordance with the instructions, may cause harmful interference to radio communications. However, there is no guarantee that interference will not occur in a particular installation. If this equipment does cause harmful interference to radio or television reception, wich can be determined by turning

the equipment off and on, the user is encouraged to try to correct the interference by one or more of the following measures:
1) Reorient or relocate the receiving antenna
2) Increase the separation between the equipment and the receiver
3) Connect the equipment into a an outlet on a circuit different from that to which the receiver is connected
Consult the dealer or an experienced radio/TV technician for help."

CANADA – User information

This intends to inform how to specify the Industry Canada (IC) ID of our module "FC7100" on the final product:

According to Canadian standards "RSS-210" and "RSS-Gen", the host device should have a label which indicates that it contains our module. The label should use wording such as: "Contains IC ID: 5119A-FC7100". Any similar wording that expresses the same meaning may be used.

The label of the host device should also include the below IC statements. When it is not possible, this information should be included in the User Manual of the host device:

[English]

"This device complies with Industry Canada licence-exempt RSS standards. Operation is subject to the following two conditions:

(1) This device may not cause interference, and
(2) This device must accept any interference, including interference that may cause undesired operation of the device.

This equipment complies with IC RF radiation exposure limits set forth for an uncontrolled environment. The antenna(s) used for this transmitter must be installed and operated to provide a separation distance of at least 20 cm from all persons, and must not be co-located or operated in conjunction with any other antenna or transmitter. Installers / integrators must ensure that a separation distance of at least 20 cm exists between the device and its antenna and users.

[French]

« Le présent appareil est conforme aux CNR d'Industrie Canada applicables aux appareils radio exempts de licence. L'exploitation est autorisée aux deux conditions suivantes :

(1) L'appareil ne doit pas produire de brouillage, et
(2) L'utilisateur de l'appareil doit accepter tout brouillage radioélectrique subi, même si le brouillage est susceptible d'en compromettre le fonctionnement »

Cet appareil est conforme aux limites d'exposition aux rayonnements RF stipulées par IC pour une utilisation dans un environnement non contrôlé. Les antennes utilisées pour cet émetteur doivent être installées et doivent fonctionner à au moins 20 cm de distance des utilisateurs, et ne doivent pas être placées près d'autres antennes ou émetteurs, ou fonctionner en conjonction avec ceux-ci. Les installateurs / intégrateurs doivent s'assurer qu'une distance de 20 cm au moins sépare l'appareil et ses antennes des utilisateurs. »