Exhibit L – Users Manual

Bluespan LLC

Base Station Transmitter

Quick Start Guide

What's what?

Wristag *features*

- **A** Speaker
- **B** Red Activation Dot
- **C** Security Clasp
  Requires Wristag Key (found on Base Unit) to open
- **D** Red Light
  - *Blinks to signal complete activation/ deactivation of Wristag or when charging*
  - *Descending chirp and flash indicates that Wristag is in the process of deactivating*
- **E** Green Light
  - *Blinks when Wristag is activated or when charging is complete.*
  - *Ascending chirp and flash indicates that Wristag is in the process of activating*
  - *Constant chirp and flash indicates that Wristag is unsuccessful in activating*

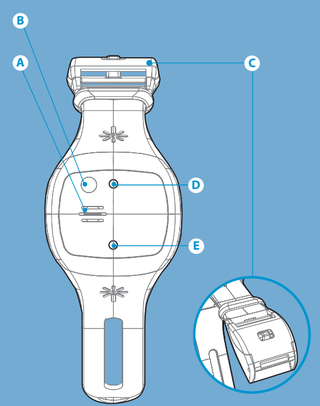

NOTE: Check all elements to make sure everything is present and working. If an problems should occur or elements missing, please contact 1-888-8-ion-kids (1-888-846-6543).

Wristag *tamper sensor*

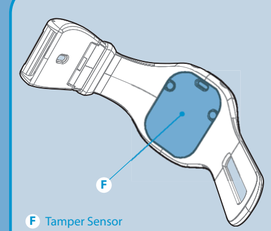

F Tamper Sensor

Wristag will emit an audio and visual alarm if it senses tampering, or if it is removed from child's wrist while still activated. For this reason, if you are initially practicing Step 3 and Step 4 without your child, remember to place Wristag on your own wrist, or cover the back with white paper. Otherwise, an empty Wristag will immediately release a Tamper Mode Alert.

Base Unit *features*

- **A** Base Unit Screen
- **B** Activation Transmitter
- **C** Wristag Key
  Essential component for opening Security Clasp (3 included)
- **D** Software Upgrade Port
- **E** Charging Port
- **F** Find Button

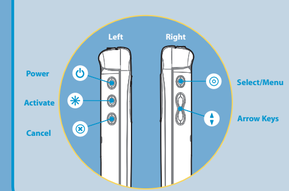

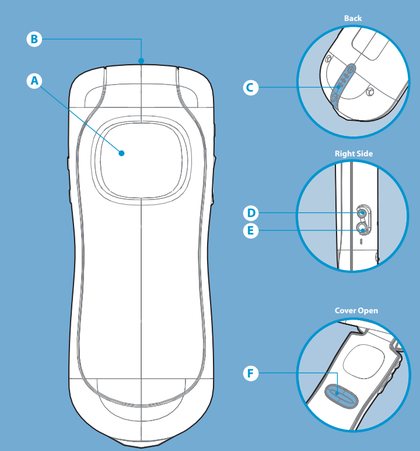

Quick Reference of Terms

Activation Mode - This screen first appears when you turn on Base Unit and can be recalled at any time by pressing Activate. In this mode the Base Unit is activating the Wristag.

Comfort Zone - Indicates the relative distance a child must be before triggering an alarm. Can be adjusted as needed by parent using the Arrow Keys.

Find Mode - When Out of Range Alert signals and you cannot see your child, open the Base Unit Cover and press the Find Button to enter the Find Mode.

Monitoring Mode - Base Unit Screen rests in this mode at all times unless there is an alert. Here you can view the child icon in relation to the Comfort Zone which you can adjust as needed.

Out of Range Alert - sounds when child goes beyond the Comfort Zone setting.

Return to Base - A signal you can send to your child's Wristag to communicate a predefined message such as "Come home for dinner."

Sleep - puts a Wristag 'to sleep' and allows a child to go beyond the Comfort Zone for 30 minutes without signaling an alarm.

Silent Mode - a setting that silences the audio alarm and the vibration alarm.

Tamper Mode Alert - an alarm that signals when Wristag senses tampering or is removed from wrist without being deactivated

Play a Game!

It is important to familiarize yourself with the operation of the ionKids system before actual use. We recommend reading through the following steps and then playing a game of hide-n-seek with your child. This will help you to become comfortable with the Base Unit, and understand and customize its features. We suggest starting in a familiar place, like your backyard. After successfully placing a Wristag on your child's wrist and activating it, begin by having your child hide. Then, while monitoring with the Base Unit, practice setting your Comfort Zone, enabling the Find Mode, initiating a Return To Base Call, and the other ionKids features detailed below. Once you feel that you have mastered the System in a familiar space, try moving to a larger and different environment like a store or park. Practice will ensure both you, and your child feel comfortable with the reliability of the ionKids system, its functionality, and its alert system.

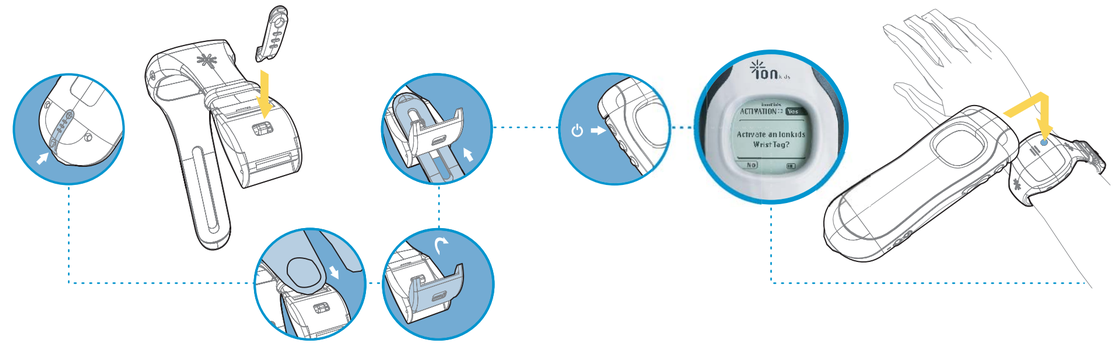

1 Putting Wristag on Child

Locate the Base Unit and turn over to locate the Wristag Key. Remove the Key and insert it into the opening on the Wristag's Security Clasp. Using your thumb, lift clasp to release strap. Place the Wristag on your child's wrist and adjust strap to be comfortable, yet snug. Close clasp until it clicks. This indicates a secure lock between clasp and strap.

NOTE: When you are finished, remember to put the Security Key back into the Base Unit.

NOTE: Please be aware of Tamper Alert function as explained above and in the Advanced Features section on back.

2 Power On & Activate

Press the Power button on the Base Unit. The ionKids logo will appear on the Base Unit Screen, then the Activation Mode will appear. Now, press and hold down Activate. At the same time, aim the Activation Transmitter on the Base Unit at the Red Activation Dot located on the Wristag. (Note: Be sure the Base Unit is within 1 inch of the Wristag). The Wristag's Green Light will signal you with ascending chirps and flashes if it has sucessfully activated. (If unsucessful, Green Light will signal constant chirps and flashes) When fully activated, the Wristag's green light will flash on a slow and constant basis.

3 Assign a Name

After Activation, the Base Unit will give you the options of defaulting to a sequential tag (such as Tag 1), assigning a tag name previously added and stored, or adding a new tag name. If introducing a new child to the Base Unit, use the Arrow Keys to scroll to "Add a New Name" and press Select. Use the Arrow Keys and Select to spell out name of the child you are monitoring. Use the Arrow Keys to scroll to "Done" and press Select. The Base Unit will enter the Monitoring Mode. Options to Edit or Delete a name are further explained in the Advanced Features on back.

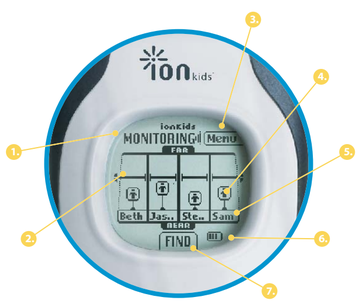

4 Understanding the Monitoring Mode

1. **Mode Indicator** - Denotes what the Base Unit is doing.
2. **Comfort Zone** - Indicates the relative distance a child must be before triggering an alarm.
3. **Menu** - Allows you to access the Advanced Function Features.
4. **Child Icon** - The distance between you and your child.
5. **Name** - The name assigned to a Wristag.
6. **Battery Gauge** -The amount of charge remaining on the Base Unit.
7. **Find Button** - Indicates the location of the Find Button inside Base Unit.

5 Setting Comfort Zone

The Base Unit Screen rests in Monitoring Mode at all times unless there is an alert. You can set your Comfort Zone by using the Arrow Keys to increase or decrease the bar.

The Base Unit signals an Out of Range Alert when a child goes past your Comfort Zone setting. The Base Unit will notify you of this by buzzing, vibrating, and illuminating the Base Unit Screen in red. The Base Unit will also illustrate which child has gone Out of Range by illuminating their particular bar graph.

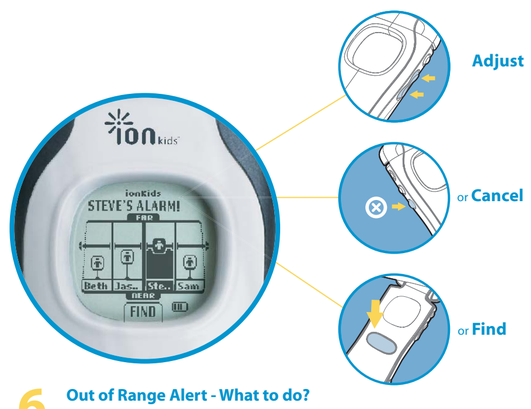

6 Out of Range Alert - What to do?

I can still see my child.
If the Out of Range Alert signals, but you can still see your child, press Silence/ Cancel to mute the alarm. The Base Unit will stay in Out Of Range Alert until you either give your child more space to play by increasing the Comfort Zone bar or call your child back within the Comfort Zone.

I do not see my child.
Do not panic. Your child is most likely close by. Open the Base Unit and press the Find Button.

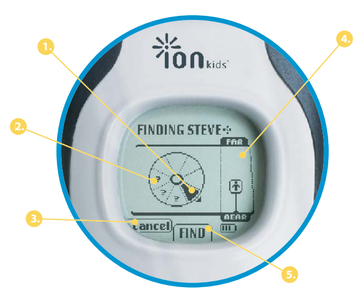

7 Understanding the Find Mode

1. **Directional Slice** - Moves around the circle telling you the direction of your child.
2. **Empty Slice** - As you turn, the slices will become active if your child is in that direction. The '?' symbol means an area has not been swept. Keep sweeping the unit back and forth to ensure a proper reading.
3. **Cancel Find** - Cancels a Find.
4. **Distance Indicator** - Representation of how far away your child is.
5. **Find Button** -Activate or Deactivate the Find Mode.

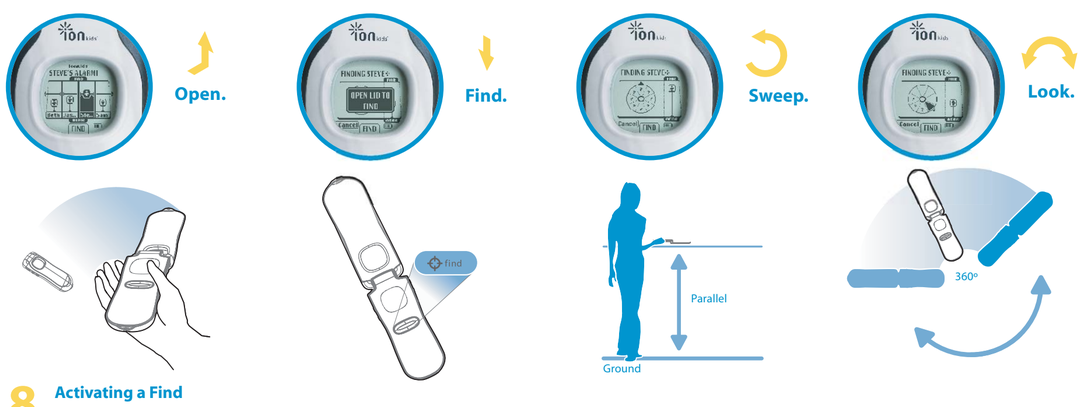

8 Activating a Find

Finding a child is simple. Open. Find. Sweep. Look.

Open
When you would like to initiate a Find, fully open the Base Unit. You will feel the lid click into place when opened.

Find
Press the Find Button. The Base Unit will now go into the Find Mode. The key to successful Finding is to make sure The Base Unit remains parallel to the ground and to sweep it back and forth. This helps the Base Unit pinpoint the direction of the child.

Sweep
While sweeping the Base Unit back and forth parallel to the ground, the Directional Slice on the Base Unit Screen will show you which direction to walk. Follow it and remember to keep sweeping. This helps keep the results fresh and relevant.

Look
As you are sweeping the Base Unit back and forth, be sure to make a complete circle and look around in the environment . Remember, your child could be behind you. To cancel a Find, either push Cancel, or press the Find Button again.

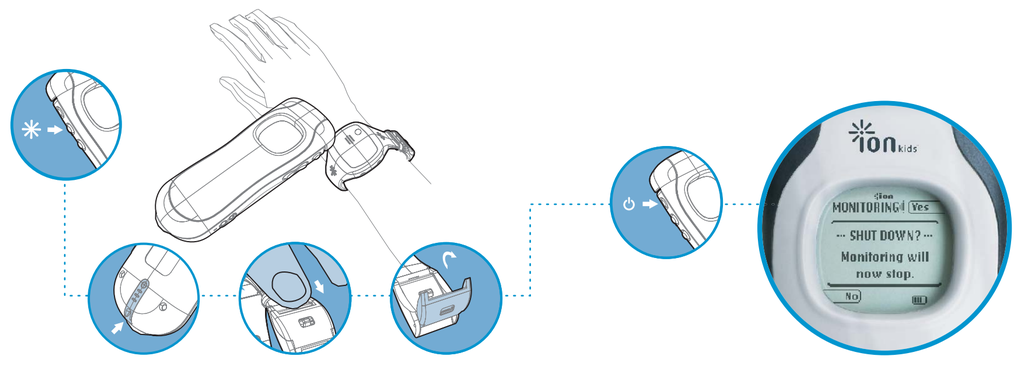

9 Deactivate/Remove a Wristag

To deactivate a Wristag, press Menu, use the Arrow Keys to scroll to Deactivate and press Select. The Base Unit will ask if you want to deactivate an individual Wristag or all of the Wristags. Use the Arrow Keys to scroll to your choice and press Select. The Base Unit Screen will confirm deactivation as the Wristag's Red Light gives a descending chirp and flash. Use the Wristag Key to remove Wristag from child (see Step 1). Remember to put the Wristag Key back into the Base Unit.

10 Power Off

The Base Unit will return to the Monitoring Mode if there are still active Wristags, or return to its Activation Mode if there are none. To power off the Base Unit, press the Power Button. If the Base Unit is still monitoring a Wristag, it will ask you if you would like to continue. To continue shutting down, press the Yes option, or to continue monitoring press the No option.

Quick Start Guide

A Naming - Add Name

You can Add a name at the moment of Wristag activation. You can also add a new name to the Base Unit at any other time and Activate it after you are finished. To access this feature, press Menu on the Monitoring Mode Screen. Use the Arrow Keys to scroll down to the Add Name menu item and press Select. An alphabet will appear on screen. Use the Arrow Keys to scroll to a particular letter and press Select to choose this letter. After you have spelled out the name of the child you are monitoring, use the Arrow Keys to scroll to "Done" and press Select. This will bring you back to the Menu List. Press Cancel to return to Monitoring Mode.

If you chose to activate a new Wristag with this name, follow the Activation steps again and this new name will now appear in the list of names to choose from.

B Naming - Delete Name

To Delete a name, press Menu. Use the Arrow Keys to scroll to Delete Name and press Select. Base Unit will show you a list of stored names. Use the Arrow Keys to scroll to the name you want to delete and press Select. Base Unit will confirm that this name has been deleted and will automatically return to the Menu List. Press Select to return to Monitoring Mode.

NOTE: You cannot Delete a name that is in Monitoring Mode.

C Contrast

The Base Unit's display has 10 levels of Contrast adjustment. Adjusting the Contrast can be helpful in bright daylight environments, or low-light situations. To access this feature, press Menu on the Monitoring Mode screen. Use the Arrow Keys to scroll to the Contrast menu item. Use the Arrow Keys again to raise or lower the Contrast level of the screen. Press Select when you are satisfied with the result.

D Return to Base

You can use a Return to Base call when you wish to have a child/children return to your "Home Base." This is a predefined location which you and your child/children decide upon before each use of ionKids. A base may be an environmental landmark, but it could also be a predefined message, such as "Come inside for dinner" or "Stay where you are, I'll find you."

Activate a Return to Base call by pressing Menu. Use the Arrow Keys to scroll to the Return to Base menu item. By selecting the Return to Base item, the Base Unit will ask you if you would like to call a particular Wristag, or all of the Wristags back to base. Use the Arrow Keys to scroll to your option and press Select.

The Base Unit will signal the Wristag(s) and the Wristag(s) will begin chirping, and a red light will begin to flash. This will inform the child/children that it is time to return home. Press Cancel to end and Base Unit will return to Monitoring Mode.

! Trouble Shooting Guide

Q1. **No lights come on when I try to recharge the Wristag.**

A1. Be sure the Wristag is properly seated in the charging cradle. Notice that there is a small notch at one end of the cradle. That must align with the slot in the underside of the Wristag. Press that end in first into the charging cradle, then snap in the other side. If the cradle is plugged into the Octopus and power is supplied (from either the power brick or the car charger) then the red light on the Wristag should flash. The red light will flash for two hours to ensure a full charge. Then the green light will flash.

Q2. **My Wristag seems to be caught in some software loop. Lights are flashing for no reason or it occasionally beeps for no reason. What do I do?**

A2. To reset the Wristag software simply place the Wristag into the cradle of the Wristag charger (make sure the cradle is connected to the Octopus and that power is provided to the Octopus) and leave the Wristag in the cradle for 10 minutes. This should reset the Wristag software.

Q3. **My Base Unit seems to be caught in some software loop and I can't get it to function properly. What do I do?**

A3. Simply plug the Base Unit into the charger for 10 minutes and the software will reset itself. Make sure there is power supplied to the Base Unit.

Q4. **When I recharge the Base Unit it turns on. Is this correct?**

A4. Yes. This way you can both use and recharge the Base Unit at the same time.

Q4. **I have problems getting the Find Mode to function properly.**

A4. It is important to make sure that the top is flipped completely open until it snaps. Also, it is important to make sure you keep the Base Unit parallel to the ground while "sweeping" the Base Unit from side-to-side. Finally, make sure the Find Button has been pushed and the navigation circle appears in the display. Then sweep from side-to-side, aligning the darkened Directional Slice of the circle with the center of the top.

Q5. **The Directional Slice in the navigation circle disappears after a few seconds.**

A5. This is normal. You want to keep sweeping from side-to-side as you walk toward your child. If you stop sweeping from side-to-side then the Directional Slice will disappear. This is designed so that you continue to "sweep" until you find your child.

Q6. **I don't know which port on the charging Octopus I plug which device into.**

A6. It doesn't matter. You can plug a power source or any ionKids product into any port and everything will work just fine. UNDER NO CIRCUMSTANCES SHOULD YOU PROVIDE POWER TO THE OCTOPUS FROM BOTH THE A/C POWER BRICK AND CAR CHARGER AT THE SAME TIME.

Q7. **Why does the Directional Slice on the navigation circle sometimes bounce from side to side?**

A7. The communication between the Wristag and Base Unit is completed using short bursts of a signal. Sometimes the signal bounces off a wall, glass, car or other object and, for an instant, it appears that the signal is coming from the direction of the reflection rather than the Wristag. This is perfectly normal. Just keep on "sweeping" the Base Unit from side-to-side as you walk toward your child and you will find that the signal bounces are minimal.

Q8. **When I put one Wristag in Find Mode all the other Wristags I am monitoring also start beeping. Why is this?**

A8. Find Mode is an emergency mode. It is used when you can't readily find your child. As such, it is important that other children who are being monitored know that there is a problem. Therefore, their devices are signaled at the same time to alert them. You should have a plan with your children as to what to do if their Wristags alarm. Generally, it is best for the children to stay still and wait for you to gather them or seek an adult for assistance.

Q9. **I want to silence the beeping and vibrating when in Find mode. How do I do that?**

A9. Press Cancel. The Find function will continue to work but the Base Unit will no longer beep and vibrate.

Q10. **Can I put more than one Wristag into the Sleep mode?**

A10. Yes you can but all Wristags Sleep for the same amount of time—30 minutes per session. If one Wristag has been Sleeping for 10 minutes and you then put a second Wristag into Sleep, the first Wristag will be reset for another 30 minutes.

Q11. **Is there a proper way to align the decorative stickers for the Wristag?**

A11. Yes and it is important that you follow the directions. You will notice that each sticker has a cut out area on one section. That section goes over the speaker opening in the Wristag. When properly aligned the red and green lights should clearly flash through the holes in the Wristag. It sometimes is helpful to align the sticker while the Wristag is flashing at least one light. This can be completed while the Wristag is being recharged.

Additional questions, concerns or issues? Please call our toll free hotline 888-8-ionKids (888-846-6543) for assistance.

E Tamper

Wristag will release an audio and visual alarm, called a Tamper Mode Alert, if it senses tampering or if it is removed from a child's wrist while still activated. The Tamper Mode Alert may go off unintentionally if you are practicing Activation without putting the Wristag onto a child's wrist. To avoid this, to place the Wristag on your own wrist, or cover the back with white paper. A Tamper Mode Alert may also signal if a Wristag is too loose on a child's wrist. Make sure the Wristag is snug, but comfortable on your child's wrist.

To silence the Tamper Mode Alert, press Cancel. Tamper Mode will alarm again soon if the Wristag sensors are not covered properly.

To disable this feature, press Menu, use the Arrow Keys to scroll to the Tamper menu item and press Select. Here you have the option to "Enable" or "Disable" this feature. Use Arrow Keys to scroll and press Select for either option.

F Sleep Mode Activate

There may be times when you want to keep a Wristag on a child but do not want to continue Monitoring. This may happen when another parent or guardian takes a child out of the Comfort Zone, such as into a restroom or on an amusement ride. "Sleeping" a Wristag will allow the Wristag to go past your Comfort Zone without triggering an Out of Range Alert.

To put a Wristag to Sleep, press Menu. Use the Arrow Keys to scroll to the Sleep menu item and then press Select. You may choose to Sleep an individual Wristag by name or all of the tags. The Base Unit will then return to Monitoring Mode. The Wristag(s) will Sleep for 30 minutes. To indicate the Sleeping Wristag, the Base Unit will display "ZZZ" above the Wristag name along with a countdown of the remaining minutes. Beeping will occur once every five minutes to remind you that Wristag(s) are Sleeping.

G Sleep Mode - Waking Wristags

All Tags

To wake all of the Sleeping Wristags, simply press Cancel on the Monitoring Mode Screen. The Base Unit will ask you to confirm waking up the Wristags by pressing the Yes menu option. By doing so, the Base Unit will wake up the Wristags and begin monitoring again.

Sleep Mode is programmed to last for 30 minutes. If one Wristag has been sleeping for 10 minutes and then you put another Wristag to sleep, the first Wristag will be reset for another 30 minutes.

At the end of the 30 minute Sleep session, the Base Unit will ask you if you would like to continue to Sleep. Press button that corresponds with Yes or No option on screen.

Everytime a Wristag is put to Sleep, all Sleeping Wristags are reset to a 30 minute sleep.

Charged Up?

Upon plugging the AC/DC Adapter into a power socket, the Base Unit will power on and remain on for the duration of charging. Periodically check the Battery Gauge on the Base Unit's Screen to see its progress. The Wristag's red light will flash while charging, and the green light will flash when finished. Both units will reach a full charge in two hours.

When placing Wristag into Wristag Charger, make sure that sensors on each unit are on corresponding sides to assure alignment. Wristag will beep accordingly if this is correct. Wristag will make no response if this is incorrect and will not charge.

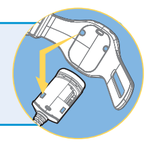

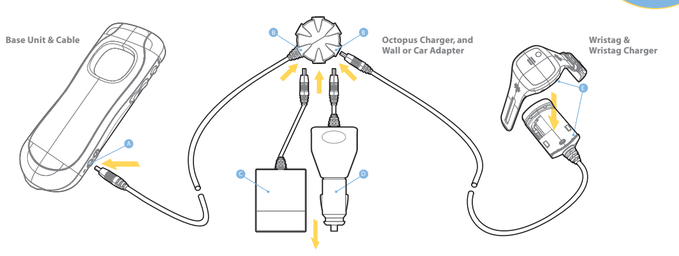

Support Information

1-888-8-ionkids (1-888.846.6543) - 24 hour help line

To purchase additional merchandise please visit us at www.ion-kids.com or call 1-888-8-ionKids (888-846-6543)

ionKids products are not designed to deter or prevent kidnappings, abductions, runaways or missing persons. Product quality, reliability and accuracy may be affected by environmental or physical conditions in the area where products are being used. Environmental or physical conditions which may affect the quality, accuracy or reliability of products include, but are not limited to, walls, floors, ceilings, metal structures, vehicles, partitions, furniture, windows, motors, bodies of water, other wireless electronic devices, lighting and atmospheric conditions. Full warranty information is available at www.ion-kids.com/warranty.

Welcome

Welcome to ionKids, a simple and innovative way to monitor your children. Please take a few minutes to familiarize yourself with the system. You will find all of the components to be extremely easy to operate. When you have become familiar with their operation, we suggest that you practice with the units by playing a game of hide-n-seek. If you have questions please call us at 1-888-8-ionkids (1-888-846-6543).

This guide provides easy-to-learn steps for operation of the ionKids system. Please be sure to practice with the units before actual use.

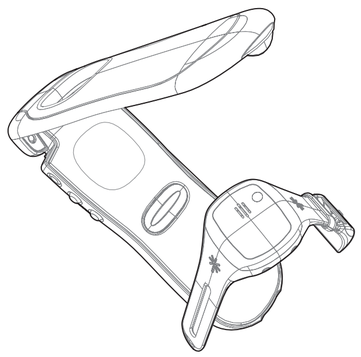

!!! Before each use, make sure you completely charge the Base Unit & Wristag.

NOTE: This equipment has been tested and found to comply with the limits for a Class B digital device, pursuant to Part 15 of the FCC Rules. These limits are designed to provide reasonable protection against harmful interference in a residential installation. This equipment generates, uses and can radiate radio frequency energy and, if nor installed and used in accordance with the instructions, may cause harmful interference to radio communications. However, there is no guarantee that interference will not occur in a particular installation. If this equipment does cause harmful interference to radio or television reception, which can be determined by turning the equipment off and on, the user is encouraged to try to correct the interference by one or more of the following measure:

* Reorient or relocate the receiving antenna
* Increase the separation between the equipment and receiver
* Connect the equipment into an outlet on a circuit different from that to which the receiver is connected.
* Consult the dealer or an experienced radio/TV technician for help.

The devices comply with Part 15 of the FCC Rules. Operation is subject to the following conditions: 1. The devices may not cause harmful interference, and 2. The devices must accept any interference received, including interference that may cause undesired operation. Any changes or modifications not expressly approved by Bluespan would void authority to operate this device. Products are tested to comply with FCC Standards. The EUT has been evaluated and found compliant with the requirements as set forth in CFR 47 sections 15.203, 15.205, 15.209, 15.247, 15.249.