CAREU UW1 User Guide

Vehicle Tracker

Version: 1.10

Reference No.: AVL-CU-UW1-00-1701UEN

Date: June 01, 2017

SYSTEMS & TECHNOLOGY CORP.

General Information

If any breakdown occurs due to the operation of the described product or users' improper handling in accordance with the instructions of the document, S&T shall be liable for the General Conditions based on the delivery of the described product and the content of the document. This product is not designed for the use of life support appliances, devices or systems and thence a malfunction of the product might reasonably be expected to make personal injury. S&T customers using or selling this product for such applications will take the risk on their own; therefore, it must be agreed S&T will be fully indemnified from any damages due to illegal use or resale. All information in this document is subject to change without notice at any time.

Disclaimer

The information, specification, images and photos in this user guide are subject to change without notice and without obligation to notify any person of such revision change.

Copyright

This user guide, including all photographs, illustrations and software, to name a few, is protected under international copyright laws, with all rights reserved. This document contains confidential, restricted and proprietary information that it has been exclusively prepared for the internal use of certain designated S&T employees, and may not be duplicated or distributed, in whole or in part, without the prior written consent of S&T's authorized delegates. Any illegal copying and disclosure of the document are absolutely prohibited, and violators are liable to the damages caused.

© Systems & Technology Corp. All Rights Reserved

Table of Contents

Chapter 1 Introduction 1
1.1 Features 1
1.2 Scope 2
1.3 About CAREU UW1 2
1.4 Hardware Architecture 3
1.5 Related Document 4
Chapter 2 Taking a Tour of CAREU UW1 5
2.1 Dimensions 5
2.2 Front View 6
2.3 Rear View 6
Chapter 3 Getting Started with CAREU UW1 7
3.1 Hardware Installation 7
3.2 LED Indicator 8
3.3 1-Wire® Solution 9
3.4 Device Configuration 17
3.5 Communication Settings 26
3.6 OBD2 Connector 31
3.7 Ethernet Connector 32
3.8 Accessories - Audio Kit 36
3.9 Device Configuration 41
3.10 Communication Settings 45
3.11 GPS Tracking Configurations 47
3.12 Firmware Upgrade 50
Chapter 4 Technical Specification 27
Chapter 5 Regulation 54

Chapter 1. Introduction

Thank you for your purchasing the CAREU UW1 Vehicle Tracker. We are very pleased to introduce you our excellent product, and you will enjoy great benefits by applying such a smart device. The CAREU UW1 Vehicle Tracker is an all-in-one device that integrates multiple applications of GPS (Global Position System), GSM (Global System for Mobile Communication) and GIS (Geographic Information Systems) with each other.

Designed with the latest GPS technology, the CAREU UW1 delivers positioning message by GSM wireless transmission to GIS platform, and then helps back-end users proceed with the analysis and the applications of vehicle transport, management, anti-theft, security and tracking.

1.1 Features

- Multiple serial ports and easy installation.
- FTP, SMS, GPRS TCP/UDP Communications Geo-fencing reports (circular/ polygon/rectangle zones) Remote configuration
- Real-time tracking (time, distance interval or intelligent mode, and heading) Intelligent power management
- 6 axis G-sensor and Gyroscope sensor (for motion detection ,low power, driver behavior monitor)
- 1-Wire® interfaces supported (optional)
- Power low/lost alarm
- User-defined reports
- Firmware upgrade over the air (via GPRS from FTP) GPS antenna disconnect/cut alarm
- Up to 150,000 data log capacity
- CAN-bus support (optional)
- Support GPS/GLONASS/BEIDOU, allows concurrent reception of two GNSS systems

1.2 Scope

This document will guides you to start the CAREU UW1 Vehicle Tracker. However, as this document contains basic device configuration only, please see the CAREU UW1 Protocol Document for the advanced information.

1.3 About CAREU UW1

The CAREU UW1 Vehicle Tracker transmits the wireless signals such as location, peripheral, and vehicle control data to a control center. The onboard GPS receiver provides users with location data including speed, direction, mileage and altitude. It uses an onboard GSM/ GPRS module to accomplish wireless transmission.

A microcontroller can probe location and command data at regular intervals, derive actions from location, peripheral and control data, and execute such actions.

Among the best features of the CAREU UW1 Vehicle Tracker, in particular, they transmit data in ASCII mode (Intellitrac X Series compatible mode) or binary mode.

Peripheral data indicates the status of various peripherals connected to and/or controlled by the device. The peripherals include, but not limited to, door locks/un-locks, starter interrupt, ignition, battery, engine and panic button.

The firmware in the device applies intelligent filtering to overcome coverage limitations for both GPS and GSM/GPRS networks.

Motion sensor controls the status of the device, whether in sleep, idle or fully-powered mode, and thereby controls the amount of current consumed by the device.

Backup battery and tamper sensing GPS Antennas primarily indicate the loss of Main Power and the interruption of GPS antenna connectivity.

The device supports over-the-air firmware upgrade to deliver additional functionality without physically touching the device once installed.

In consideration of technicality and marketability, the CAREU UW1 has so many excellences to be competitive enough to stand out in the market. With regard to the technicality, the CAREU UW1 saves and records more data even under inactive communication staus, and it also provides better power management, coexistence of GPRS and SMS modes, 1-Wire® interface, direct connection to Temperature Sensor, and up to three serial ports. When it comes to the marketability, the CAREU UW1 users are provided with the convenience that its firmware can be upgraded through COM1 without disassembling the device.

1.4 Hardware Architecture

As hardware is concerned, the CAREU UW1 is comprised of a micro-controller, regulator, GPS receiver, GSM/GPRS modem, G-Force sensor, flash memory data storage, audio interface, I/Os interface, serial ports and LED status indicators.

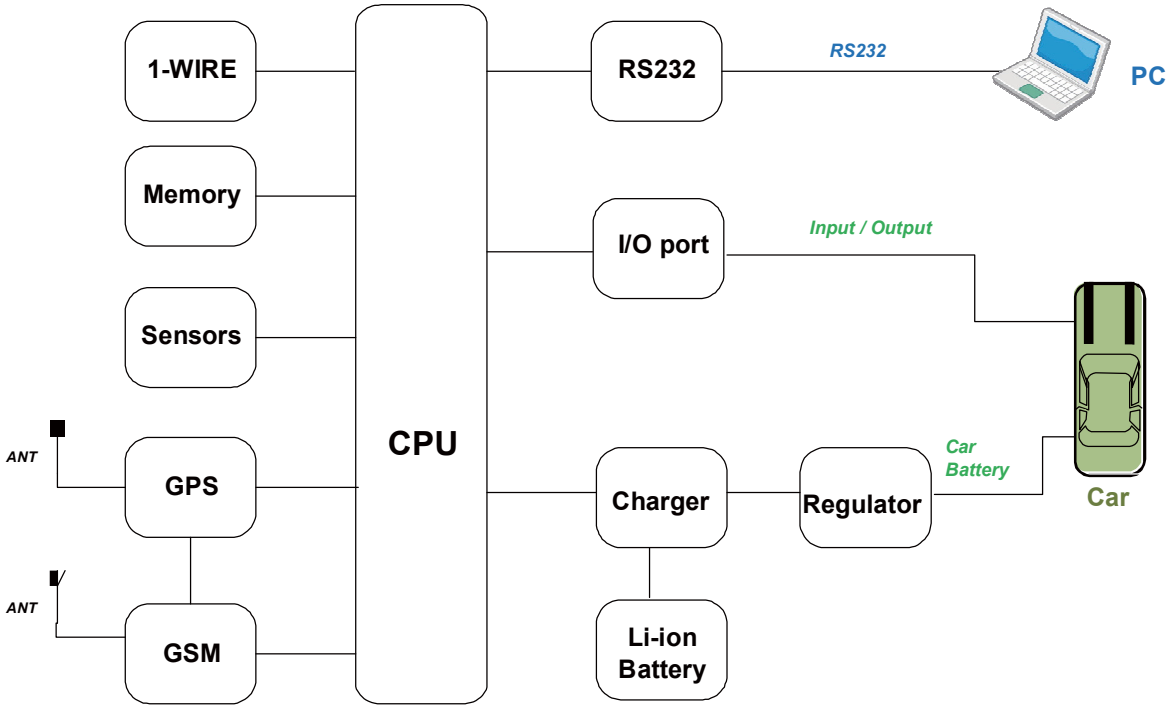

- Users can connect PC's HyperTerminal to the Diagnostic/setting port for the AVL configuration.
- G-Sensor and Gyroscope for car accident prevention, car tow-away warning and power management and driver behavior monitor.
- GPIO that connects to any customer monitoring points by door switch, anti-thief or actuators.
- The A/D input that connects the analog signal sensor to the AVL, such as the fuel or temperature sensor.
- With the built-in RF receiving circuit, an emergency push button is designable, and anti-theft setting can be activated/deactivated.
- 1-wire® interface, a reserved interface that is optional.
- The 1-Wire® interface facilitates the connection to temperature sensor, A/D devices, and iButton devices.

1.5 Related Document

[1] CAREU UW1 Protocol Document

Chapter 2. Taking a Tour of CAREU UW1

This chapter will guide you to the major connectors of the **UW1** device.

2.1 Dimensions

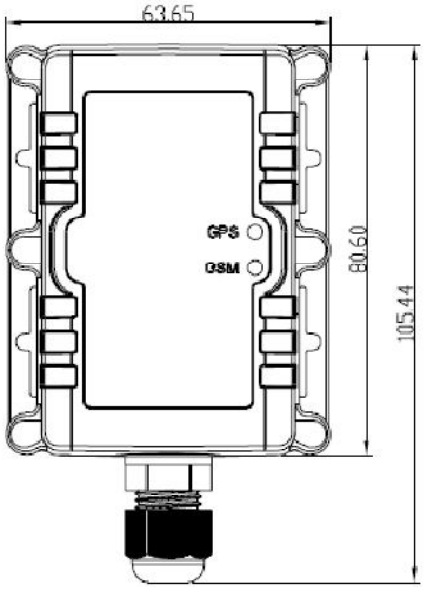

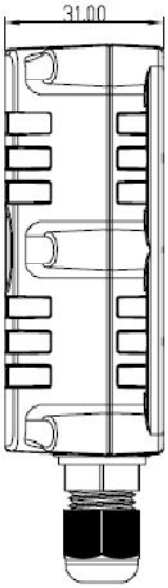

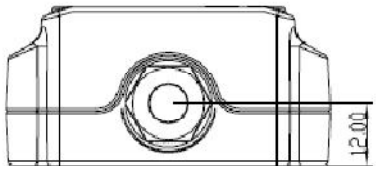

Dimensions: 106mm x 64mm x 31mm

2.2 View

I/O Definition

Color	Signal Name	Description	IO	Electrical Characteristic
Red	DC IN	Power supply input	I	DC V_{IN}= DC 6 to 48V,
Black	GND	Signal ground	G	
Yellow	Ignition	Ignition(ACC) Input	I	DC V_{IN} =DC 6V ~ 48V (Active high)
While	Input 1	Negative Trigger	I	DC V_{IN} = +0.0V ~ 1.1.V (Low Active) DC V_{IN} > 0.8V (>1.8 V_{IH} @CPU VCC 3.3V) DC V_{IN}<0.4 V (< 1.1 V_{IL} @CPU VCC 3.3V)
Green	Input 2	Negative Trigger	I	DC V_{IN} = +0.0V ~ 1.1.V (Low Active) DC V_{IN} > 0.8V (>1.8 V_{IH} @CPU VCC 3.3V) DC V_{IN}<0.4 V (< 1.1 V_{IL} @CPU VCC 3.3V)
Blue	Output1	Open-Collector Output	O	Imax = 300mA
Gray	Output2	Open-Collector Output	O	Imax = 300mA
Orange	1-Wire	1-Wire Data input/output	I/O	
Brown	Analog Input1	Analog input	I	DC V_{IN} =DC 0V ~48V (0V~3V Input to CPU port)(10/160 Ratio)