Operating Instructions

Weather Station
„WS 250US Edition“

ELV Electronics Ltd. · Hongkong

These operating instructions belong with this product. They contain important information for putting it into service and operating it. This should be noted also when this product is passed on to a third party.

Therefore look after these operating instructions for future reference!
A list of contents with the corresponding page numbers can be found in the index on page 4.

1st English edition May 2006
Documentation © 2006 ELV Electronics Limited
All rights reserved. This handbook must not be reproduced in any form, even in excerpts, or duplicated or processed using electronic, mechanical or chemical procedures without written permission of the publisher.
This handbook may contain mistakes and printing errors. The information in this handbook is regularly checked and corrections made in the next issue. We accept no liability for technical mistakes or printing errors, or their consequences.
All trademarks and patents are acknowledged.
Printed in Hong Kong
Modifications due to technical improvements may be made without prior notification.
00066930 Y2006 V1.0

Introduction

Dear Customer,

Thank you for purchasing this product.

The product has been EMC-tested and thus meets the requirements of the valid national guidelines. See also FCC-Information.

In order to maintain this condition and ensure safe operation, you, as the user, have to observe this operating manual.

Prior to using the product for the first time, please read the entire operating manual and observe all operating and safety instructions.

We should already like to point out now the correct order for commissioning the products. Please also observe the installation and calibration instructions in this operating manual as well as the information about impairment of radio transmission between the sensors and base station.

All company names and product descriptions listed herein are the trademarks of the respective manufacturers. All rights are reserved.

Table of Contents

Page
1. Intended use 5
2. Scope of delivery 6
3. Terminology 6
4. Features and functions 6
   a) Base station 6
   b) Combination sensor 7
5. Safety instructions 8
6. Battery and environment instructions 8
7. Preparation for operation, commissioning 9
   a) Commissioning the combined sensor 9
   b) Commissioning additional sensors 10
   c) Commissioning the base station 10
8. Indications of the LCD displays 11
9. Configuration and operation 13
   a) Basic settings, configuration 13
      Calling up configuration mode 14
      Country selection 14
      Setting time and date 14
      Entering longitude and latitude 14
      Setting time zone 15
      Selecting temperature unit 15
      Entering rain sensor 16
      Selecting unit for rain gauge 16
      Allocating the progress display 16
      Selecting the unit for the wind speed 17
      Terminating the configuration mode 17
   b) Operation 17
      Selecting indoor temperature display 17
      Selecting outdoor temperature display 17
      Selecting outdoor sensor 17
      Selecting rainfall quantity display period 17
      Deleting total rainfall quantity 18
      Displaying MIN/MAX values 18
      Displaying time/date for individual extreme values 18
      Deleting MIN/MAX Values 19
   c) Other functions 19
      Moon phase display 19
      Wiz Kid 19
      Weather forecast 20
      Wind symbol display (windsock) 20
      Immediate rain display 20
      Comfort indicator 20
10. Changing battery 20
   a) Base station 20
   b) Combination sensor, outdoor sensors 21
11. Troubleshooting 22
12. Range 23

13. Maintenance and cleaning....24
a) General....24
b) Cleaning base station....24
c) Cleaning outdoor sensors or combination sensor....24
d) Aligning rain sensor....27
14. Handling....28
a) General....28
b) Base station....28
c) Combination sensor....28
15. Terminology....29
16. Disposal....30
a) General....30
b) Disposing of batteries and accumulators....30
17. Technical data....31
18. FCC-Information....32
Appendix A: Position table (longitude/latitude)....33
Appendix B: Table of time zones....51

1. Intended use

The weather station WS 250US Edition is a high-quality universal weather measuring system which processes a large quantity of weather data and additional information, and displays the current weather as well as weather forecasts.

All relevant data are displayed simultaneously on the LC display. Additional data can be called up at the push of a key.

A special feature is „Wiz Kid“. He indicates the current temperature range by means of the lothes he wears, the current wind speed with his hair and scarf and the forecast and starting or current precipitation.

The forecasts of the base station serve only the purpose of orientation. They do not represent an absolutely true forecast. The manufacturer does not assume any responsibility for incorrect displays, measuring values or weather forecasts or any consequences which may result from these.

The product is intended for private use. It is not suited for medical purposes or public information.

The components of this product are not toys. Install all components in such a way that children have no access to them.

The product is battery-operated. All external sensors transmit their data per radio to the base station (433 MHz, range up to 100 m in open space, see chapter 12 on page 23).

Any other use than that described above may lead to damage to the product or to other danger.
Read the complete operating manual carefully. It contains much important information about the installation and operation.

2. Scope of delivery

- Weather station WS 250US Edition
- Plastic base for weather station
- Combination sensor
- Metal rods/pegs for the combination sensors
- Operating manual
- 7 x Mignon-batteries (LR6/AA)

3. Terminology

An exclamation mark in a triangle indicates important instructions in the operating manual which must be observed under all circumstances.

You will see the „hand" symbol for special tips and instructions concerning operation.

4. Features and functions

a) Base station

Display of indoor temperature and air humidity

- Temperature display in °C, °F
- Can be switched to display internal dew point
- Storage of minimum/maximum temperature with time and date of incidence
- Storage of minimum/maximum humidity with time and date of incidence
- Comfort zone indicator
- Graphic display of progress for the past 24 hours

Display of one of a maximum of 9 outdoor sensors (temperature and air humidity)

- Display of the data of the combination sensor or 8 outdoor sensors for temperature/air humidity (ASH 2200US and S 300 PT US)
- Display of temperature, dew point or wind-chill temperature
- Storage of minimum/maximum temperature with time and date of incidence
- Storage of minimum/maximum humidity with time and date of incidence
- Graphic display of progress for the past 24 hours

Display of wind speed

- Selectable units: km/h, m/s, mph
- Storage of maximum wind speed with time and date of incidence
- Additional graphic display (wind cone) for slight, moderate and strong wind

Display of the amount of rain in mm, l/m² or inch for:

- total amount since the last clearance, last hour, current hour, last 24 hours, current 24 hours
- storage of the maximum quantity per hour and per day
- additional display for commencing rain (immediate rain display)

Display of atmospheric pressure progress / atmospheric pressure tendency:
- graphic display of the progress in the past 24 hours
- display of atmospheric pressure tendency in 5 different stages: increasing strongly, increasing, steady, falling, falling strongly

Symbolic display of weather forecast
- Symbol for: rainy, cloudy, fair and sunny

Display of time and date
- Integrated quartz clock

Display of sunrise / sunset
- Based on location data to be entered individually; calculation is possible within a range of –60 to +60 °N

Display of moon phases
- Display of current moon phase: new moon, waxing moon, full moon, waning moon

„Wiz Kid“
Reminiscent of the almost forgotten weather house in which case a person with an umbrella comes out in case of bad weather and another one with light clothing in case of good weather, the WS 250US Edition has „Wiz Kid“.

The behaviour of this figure depends on several weather factors so that you can tell at a glance which clothes you can wear if going outdoors.
This not only evaluates the current measuring values for the outdoor temperature, air humidity, wind and rain.
The weather forecast also plays an important role here. Depending on the weather situation, „Wiz Kid“ has a different appearance and wears different clothing.

„Wiz Kid“ shows several weather factors at one glance:
- Wiz Kid’s clothing depends on the outdoor temperature measured by means of the combination sensor.
- In the case of wind speed in excess of 20 km/h, Wiz Kid’s hair will blow in the wind. If the temperature is below 15 °C at the same time, his scarf will also blow in the wind.
- If the weather forecast forecasts rain, Wiz Kid will carry a (closed) umbrella.
- If it starts raining, Wiz Kid will carry an open umbrella.

b) Combination sensor
- Radio transmission of:
  - rain quantity
  - immediate rain detection
  - wind velocity
  - temperature
  - humidity

5. Safety instructions

Damage caused by non-observance of this operating manual can lead to forfeiture of the warranty! We shall not assume any liability for subsequent damage!

We shall not assume any liability for damage to items or persons caused by improper handling or non-observance of the safety instructions! In such cases, any guarantee claims shall become null and void .

Dear Customer, the following safety and hazard notices not only serve the protection of your health but also the protection of the appliance. Please read the following points carefully!

Do not use this product in hospitals or medical institutions. Although the outdoor sensor only emits relatively weak radio signals, these may cause interference to life-support systems. The same can also apply in other areas.

The weather station is only suited for dry, indoor premises. Do not expose it to direct sunlight, extreme heat, cold, dampness or humidity.

If used correctly, the rain/wind detector is suited on the other hand to unprotected outdoor locations.

For safety and licensing reasons (CE), it is not permitted to convert or modify the product.

Do not leave the packaging material lying around. Plastic foil and bags, polystyrene parts etc. are dangerous toys in the hands of children.

Handle the product with care! Blows or impact, or dropping it even from a small height will damage it.

6. Battery and environment instructions

- Batteries do not belong in the hands of children.
- Observe the right polarity when inserting the batteries/accumulators.
- Do not leave batteries lying around. Pets or small children may swallow them. If they are swallowed, contact a doctor immediately.
- Leaking or damaged batteries/accumulators may lead to injury to the skin. For this reason, use suitable protective gloves when changing them.
- Make sure that batteries or accumulators are not thrown into the fire or short-circuited. There is a likelihood of explosion!
- Never dismantle batteries/accumulators!
- Do not recharge normal batteries. There is a risk of explosion!
- If the product is not used for longer periods of time (e.g. in case of storage), please remove the inserted batteries/accumulators in order to prevent damage caused by leaking batteries/accumulators.

7. Preparation for operation, commissioning

Please observe:
First of all, put all available outdoor sensors into operation (insert batteries) and then the base station itself.
If you proceed in the opposite order, it could occur that the base station does not detect all the existing outdoor sensors.

We always recommend you to first of all try out the base station with all outdoor sensors (in as much as you have purchased additional outdoor sensors besides the supplied combination sensor) in a room before installing the outdoor sensors in the open air. However, the distance between the base station and the outdoor sensors should be at least 2 m in order to avoid interference.

If you notice that one outdoor sensor is out of range after installation, you can assume that radio reception is not sufficient (and that there is no defect in the outdoor sensor).
This initial function test will save extensive and time-consuming error searches afterwards.

a) Commissioning the combination sensor

- Open the casing of the sensor. First of all, turn the lower casing cover slightly in the direction of the arrow (1) as shown below and then carefully lower the casing cover.
- Now insert three batteries (LR6/mignon/AA) with the correct polarity into the battery compartment (see illustration below on the right).
  Use preferably alkaline batteries.

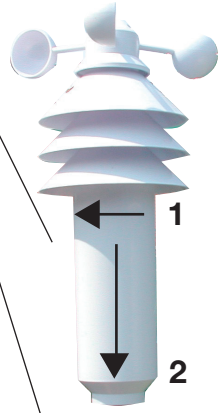

Accumulators can also be used but these will reduce the range due to the lower voltage / capacity as well as their operating life!

For the first 5 minutes the combination sensor is in a test mode and sends its data-telegrams in an intervall of approx. 3 seconds. After completion of the test mode the normal transmission interval of approx. 155 seconds is activated.
It must be guaranteed that the combination sensor has already left its test mode when the synchronisation mode of the base station is terminated, otherwise a normal reception isn't possible.

- Close the sensor casing, slide the cover to the top and lock it again.
- Assemble the installation base.

As already explained above, you should first of all install the sensors in the garden etc. after a successful initial function test.

It may be difficult to find a favourable place for the combination sensor as this should stand preferably in the shade in order to measure the correct temperature. On the other hand, it is also necessary to consider the functions of the wind and rain sensor.

Closeness to buildings, trees, etc. may impair the measuring values of the wind and rain sensor.

Once you have found a favourable location, insert the earth peg deep into the ground in order to ensure the stability of the combination sensor.

When selecting the installation site, take the safety of children, pets, vehicles, etc into consideration.
Any risk of the combination sensor's falling poses the risk of injury or danger of damaging vehicles or other objects.
You can also use a hammer to insert the earth peg into the ground. However, use a suitable piece of wood or similar in order not to damage the top end of the pipe as this makes it impossible to connect the other pieces of pipe (loss of warranty)!
Make sure that there are no pipes or similar installed in the area where you wish to insert the peg into the ground (e.g. hoses for irrigation systems or similar).

b) Commissioning additional sensors

If you wish to use one or several additional temperature / humidity sensors, for example of the type „ASH 2200US", insert the batteries now into the sensor(s) with the right polarity. You can operate up to 8 sensors.

c) Commissioning the base station

- Open the battery compartment on the back of the base station (remove the installation base, if applicable).
- Insert four batteries (LR6/mignon/AA) with the correct polarity into the battery compartment.
  Use preferably alkaline batteries.

It is possible to use accumulators but these reduce the operational life due to their lower voltage / capacity.

below

- Close battery compartment.
- After you have inserted the batteries, all segments of the LCD are displayed briefly.
- After that, the base station activates the synchronisation mode for 15 minutes. During this period, the device displays all received radio weather sensors in succession.
  If all sensors used have already been received, you can terminate synchronisation mode prematurely by pressing any key. **It must be guaranteed that the combination sensor has already left its test mode, otherwise a normal reception isn't possible. In case of doubt the synchonisation mode of the base station should not be terminated manually.**
- Normal display of all weather data takes place after synchronisation. Only the sunset and sunrise together with the moon phase are not yet displayed because the time and the calendar have to be set for this purpose.
- You can either hang the base station on a wall (there is a corresponding opening on the back) or place it on a level surface with the installation base.
- If you want to use the foot, first put the front central spike of the foot into the supports on the back side of the base station. Then, swing the foot a little bit back till the two rear spikes lock into the catch supports at the buttom of the base station.

8. Indications of the LC Display

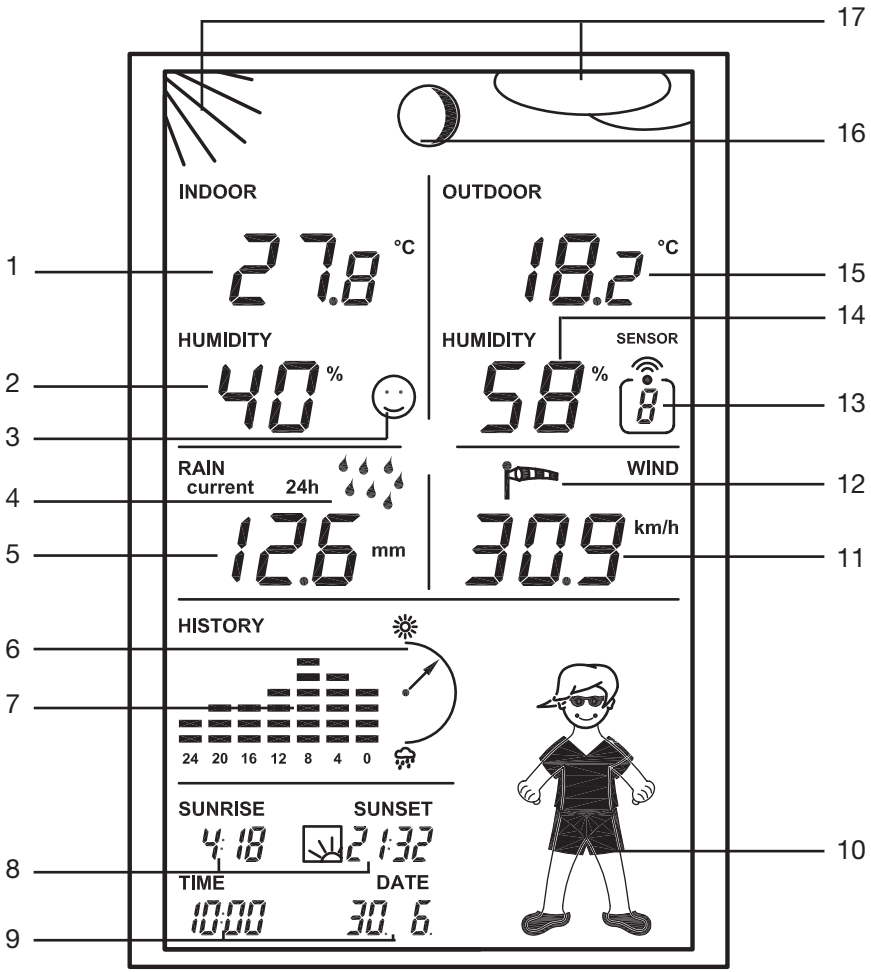

1 Current indoor temperature
2 Current indoor humidity
3 Comfort zone indicator (for the display of a comfortable/uncomfortable climate)
4 Rain display
5 Amount of rain (in the above illustration, the rain amount in the current 24 hours)
6 Atmospheric tendency display
7 Graphic progress display (history) depending on the unit selected (illustration above: atmospheric pressure)
8 Sunrise time and sunset time
9 Time and date display
10 Animated icon „Wiz Kid“
11 Current wind speed
12 Symbol for wind strength
13 Sensor number (no display when the combination sensor is selected)
14 Current air humidity value of the outdoor sensor selected
15 Current temperature value of the outdoor sensor selected
16 Symbol for the moon phase
17 Symbol for the weather forecast (sunny, fair, cloudy, rainy)

9. Configuration and Operation

After installation of the radio sensors and the subsequent commissioning of the base station (this order must be observed!), the data transmitted by the radio sensors should appear on the LC display of the base station.

a) Basic Settings, configuration

The following settings are still required for operation:

- Year, month, day, hour, minute
- Latitude/longitude of your position
- Time zone

You will then see the display of the moon phase and the sunset/sunrise as well as the date and the time.

Additional settings:

- Rain sensor alignment is possible on request (however, this was already carried out by the manufacturer so that it normally does not have to be repeated!)
- Unit of rain quantity
- Assignment of progress display (air pressure, interior or exterior temperature)
- Wind strength unit

The keys have the following functions in configuration mode:

Imprint	Function	Description
IN		(unused)
SENSOR	**-**	leaving configuration mode
MIN/MAX	**EXIT**	increase value
RAIN	**+**	decrease value
OUT	**NEXT**	to next setting

You will also find the key allocation on the back of the weather station.

Please observe:
The values are adjusted more quickly if you press the keys „+“ or „-“ longer when making individual settings.
After each setting, you can leave the configuration mode by pressing „EXIT“ or move on to the next setting using the key „NEXT“.

Configuration takes place in the sequence:
Country → Year → Month → Day → Minute → Hours → Daylight Saving time → Latitude → Longitude → Time zone (ti) → Temperature unit → Rain sensor alignment → Rain unit quantity → Assignment of progress display → Wind unit

After that, the setting order commences from the beginning again.

Calling up configuration mode

IN >2 seconds

Press key „**IN**“ for approx. 2 seconds.

You can leave the configuration mode at any time by pressing „**EXIT**“ (= „SENSOR“), see „**Terminating configuration mode**“.

Country selection

+ - NEXT coun

Set country using the keys „**+**“ and „**-**“.
- „US“ = USA
- „STD“ = Europe

Press „**NEXT**“ key.

Setting time and date

+ - NEXT year

Set current year using the keys „**+**“ and „**-**“.
Press „**NEXT**“ key.

+ - NEXT month

Set current month using the keys „**+**“ and „**-**“.
Press „**NEXT**“ key.

+ - NEXT day

Set current day using the keys „**+**“ and „**-**“.
Press „**NEXT**“ key.

+ - NEXT minutes

Set minutes using the keys „**+**“ and „**-**“.
Press „**NEXT**“ key.

+ - NEXT hours

Set hours using the keys „**+**“ and „**-**“.
Press „**NEXT**“ key.

+ - NEXT dst

Set daylight saving time:
- „On“ = active
- „Off“ = inactive

Press key „**NEXT**“; then you can set the latitude („LA“ appears on the display).

Entering latitude/longitude

It is necessary to state the location of the weather station in order to calculate the sunset/sunrise times. You can enter the latitude at a range of between -60.0° to +60.0°.

The manufacturer’s setting is Washington D. C.. You can determine your position in different ways:
- in the appendix A on page 33, you will find a table with the coordinates of all US counties cities. Select a nearby location near and enter its coordinates.
- if you have a GPS navigation device, e.g. in your car or a mobile device, you can adopt its position details and thus the exact position.
- you can also obtain the exact coordinates in the Internet. There are numerous sites that deal with navigation.

Please observe the fact that the information concerning the sunrise / sunset would only be correct to be exact at the sea or for completely level landscape. Mountains, high forests etc. will alter these values for your location.
Even for the ideal situation, the information can deviate by some minutes as an approximation formula is used for the calculation.

+ - latitude	Set the latitude using the keys „**+**“ and „**-**“. Example: 52.5°, input: 525
NEXT	Press the „**NEXT**“ key. After that, you can enter the longitude. The display shows this as „LO“ („Longitude“).
+ - longitude	Set the longitude using the keys „**+**“ and „**-**“. Example: 13.4°, input: 0134
NEXT	Press the key „**NEXT**“ and now set the time zone. The display shows „ti”.

Setting the time zone

The time zone is required for the calculation of the sunrise and sunset times.
Enter the difference to GMT (Greenwich Mean Time) = UTC (Universal time).

In the appendix B is a table showing the time zone difference from UTC for North America time zones.

+ - time zone	Enter the current value for your time zone using the keys „**+**“ and „**-**“.
	All settings have been made at this time for correct operation of the weather station. The extended settings are not required for normal operation.
EXIT terminating configuration	Now press „**EXIT**“ to leave the configuration mode and return to normal mode. Now the base station is back in normal mode.
or	
NEXT extended settings	Press the key „**NEXT**“ to make extended settings.

Selecting the unit for temperature measurement

+ - NEXT temperature unit	Set temperature unit for outdoor and indoor temperature. You can chose between °C or °F. Press the key „**NEXT**“ to make rain sensor settings.

Entering the alignment value

The rain gauge has been set to a high degree of accuracy ex works so that you normally do not need to align it.
Simply press „**NEXT**“ to take over the factory settings.

Otherwise the alignment value will have to be determined first of all in normal mode (see chapter 13 d) on page 27).

+ - alignment value

Enter the previously determined alignment value using the keys „**+**“ and „**-**“.

NEXT

Press „**NEXT**“ to set the unit for measuring rain.

Selecting the unit for rainfall measurement

The unit for the rainfall quantity is displayed in the field „RAIN“ where you can chose between l/m² or mm.

+ - rain quantity unit

Select the desired unit using the keys „**+**“ and „**-**“.

NEXT

Press the „**NEXT**“ key. After that, you can allocate the progression display.

Allocating the progress display

You can allocate the following display types to the graphic progression display:

- atmospheric pressure
- interior temperature
- exterior temperature

If the progress display is allocated to one of the two temperature displays, the symbol „⊿▽“ appears in the display field concerned in addition.

Overlay/identification in the display field:
P = atmospheric pressure
O = outdoor temperature
I = indoor temperature

+ - assigning progress display

Select the desired allocation using the keys „**+**” and „**-**”.

NEXT

Press the key „**NEXT**“, after that, the unit for the wind velocity measurement can be entered.

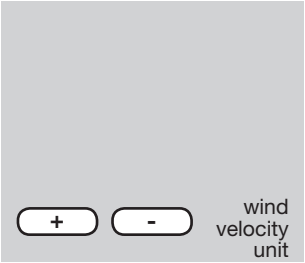

Selecting the unit for wind velocity

The following units can be set:
km/h = kilometre per hour
m/s = metre per second
mph = miles per hour

The display will take place in the field „WIND".

Select the unit with which you wish to display the wind velocity using the keys „**+**" and „**-**".

If the „**NEXT**" key is pressed, the country collection will appear again; the input order can commence from the beginning again. You could now, for example, monitor or alter the entries.

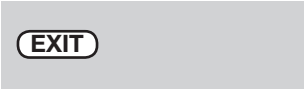

Terminating configuration mode

Press „**EXIT**" to complete input. This can take place at any desired position, e.g. after setting the time etc.

b) Operation

Selecting indoor temperature display

In normal operation, the indoor temperature and internal humidity are displayed in the display field „INDOOR".
By repeatedly pressing the „IN" key, you can switch between:
- indoor temperature
- respective dew point

Selecting outdoor temperature display

In normal operation, the indoor temperature and internal humidity of the selected outdoor sensor are displayed in the display field „OUTDOOR".
By repeatedly pressing the „**OUT**" key, you can switch between:
- outdoor temperature
- respective dew point
- temperature measured (wind chill)

Selecting outdoor sensor

In the display field „Sensor", the outdoor sensor selected at the moment concerned is displayed together with its sensor number. Only active (in the synchronisation phase) sensors are displayed. To select the outdoor sensors or combination sensors, press the „**SENSOR**" key so long until the desired sensor number appears:
- for outdoor sensors 1-8, the sensor number concerned (1-8) is displayed
- no sensor number is displayed for the combination sensor, the overlay „SENSOR" (alongside the outside humidity) disappears.

Selecting rain quantity display period

By repeatedly pressing the „**RAIN**" key, you can switch between:
- display for the last hour
- display for the current hour

- display for the last 24 hours
- display for the current 24 hours
- display of the total quantity since the last clearance of the rain quantity after inserting the batteries.

In the process please consider the following peculiarities: The calculation of the rain quantity „last hour“ always occurs at the half-hour, for example between 2.30 p.m. and 3.30 p.m. The calculation of the rain quantity „last day“ always occurs at 7.30 a.m. The rain quantity „current hour/day“ results from the quantity, that accumulates till the next half-hour, for example 4.30 p.m.

Deleting total rain quantity
Press „RAIN“ key for approx. 2 seconds. After releasing the key, the total rain quantity is deleted.

Displaying MIN-/MAX figures (extreme values)
For the measurement figure of the indoor/outdoor temperature and indoor/outdoor humidity, the minimum and maximum figures reached since the last clearance of data are stored.

Only the MAX figures are stored for the wind velocity and rain quantity measurements.

☞ The point of time and date of incidence of the extreme value are also stored for all figures.

Pressing the „**MIN/MAX**“ key switches between the display of the minimum values, the maximum values and the normal display. Proceed in retrieving the stored date as follows:

- **Retrieving minimum values**

☞ Press the „**MIN/MAX**” key. „MIN“ appears in the centre.

The minimum values are now overlayed in the displays concerned. No display takes place for wind and rain (minimum value would always be „0“).

- **Retrieving maximum values**

Press the „**MIN/MAX**” key once again (starting from the normal display press the key twice). „MAX” appears in the display in the centre.

☞ The maximum values are displayed in the display fields concerned.

- **Returning to normal display**

By pressing the „**MIN/MAX**” key, return to the normal display takes place, the overlay „MAX“ disappears from the display.

Displaying time/date for individual extreme values
If necessary, you can have the appropriate time or date of incidence displayed for each individual extreme value.

Proceed as follows:
- First of all, select the display of the minimum values (press „**MIN/MAX**” key once, overlay „MIN“ in the LCD) or the maximum values (press „**MIN/MAX**” key twice , overlay „MAX“ in the LCD).

- The desired value can now be displayed by pressing the „**SENSOR**" several times.

Order of display:
indoor temperature → indoor humidity → outdoor temperature → outdoor humidity → rain quantity (only MAX value, not for „TOTAL") → wind velocity (only MAX value)

☞ Only one display field is displayed with its extreme value at one time; the point of time and date of incidence of the extreme value appears below in the time display.

- Pressing the „SENSOR" key again leads back again to the complete display of all extreme values (MIN or MAX according to whether you have selected the minimum or maximum values at the beginning).

Deleting MIN/MAX values
Press the „**MIN/MAX**" key once to display the minimum values or twice to display the maximum values. Now you can choose the value to be deleted by pressing the „SENSOR" key.

To delete the values displayed (either minimum values or maximum values), press the „RAIN" key for more than two seconds.

After that, the figures are deleted.

c) Other functions

Moon phase display
The moon phase display appears with the following symbols:

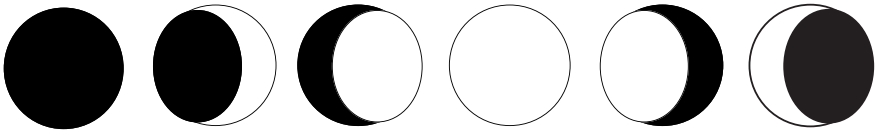

Full-moon Waning New-moon Waxing

☞ The moon phase display only appears when the time/date have been entered.

Wiz Kid
„Wiz Kid" displays several weather factors at once as an animated figure:

- **Outside temperature (only combination sensor)**
  Wiz Kid's clothing is altered through the outside temperature on the combination sensor.
- **Rain**
  If the weather forecast function has registered „rain", a closed umbrella is displayed.
  If the combination establishes rain, the umbrella is put up.
- **Wind velocity**
  For wind velocities of over 20km/h, Wiz Kid's hair blows in the wind. If the temperature is under 15 °C at the same time, the scarf displayed also blows in the wind.

Weather forecast
The symbols of the weather forecast from the weather station right at the top of the display give the following forecasts:

Overcast with rain	→	rainy
Overcast	→	cloudy
Overcast with sun	→	bright
Sun	→	sunny

Wind symbol display (windsock)
The windsock symbol in the display field „WIND" shows at a glance whether the wind is at present light, moderate or strong:

Windsock hanging	→	light wind (< 10 km/h)
Airsack half raised	→	moderate wind (10...20 km/h)
Airsack horizontal	→	strong wind (> 20 km/h)

Immediate rain display
The combination sensor determines not only the rain quantity but also transmits the current status (dry/wet) of a special sensor. Through this, even one drop can be transmitted to the base station as „beginning rain".

In the LC display of the base station, a symbolic rain drop appears in the field „RAIN". Apart from this, „Wiz Kid" puts up his umbrella.

Comfort indicator
The comfort indicator reflects the climate in the room (ratio of temperature to humidity). You can find a table of values for the display areas in section 15 on page 29.

The comfort indicator displays three different smiles: ☺ 😐 ☹

Graphic progression display (history)
The bar chart shows the last 24 hours' progress of atmospheric pressure, outdoor and indoor temperature. The individual columns represent no absolute value, but the difference to the current measurement (0-hour column). This point of reference is always situated in the center (4 bars), so that the tendendy can be interpreted at first glance.

10. Changing battery

☞ Depending on which batteries or accumulators you use, the replacement interval can be very different. High-quality alkaline batteries keep the longest, accumulators or cheap zinc-carbon batteries require more frequent changing.

a) Base station

If the battery flat symbol appears in the display ( ), the batteries have to be replaced by new ones.

- Always replace the whole set of batteries.
- Do not mix full with „half-full” batteries“.
- Always use four batteries of the same type and manufacturer.
- Do not mix batteries with accumulators.
- As already mentioned, accumulator operation is possible, the durability is, however, appreciably lower than with batteries.

- For changing the batteries, proceed as described in section 7. c).

Please observe the following:
After replacing the batteries, all data, values stored in the base station (e.g. time, date etc.) are deleted and have to be entered again.

b) Combination sensor, outdoor sensor

When the display of the sensor concerned fails for more than 24 hours, the batteries are to be replaced with new ones as described in section 7. a) and b).

Check as whether there is possibly some disturbance in the radio transmission which is the cause for the failure of the data transmission. In this case also, there will be no indication in the display of the base station.
The cause could be, for example, a metal object in the radio path (e.g., a parked vehicle).

11. Troubleshooting

Observe the safety instructions contained in these operating instructions

Problem	Remedy
No reception	• The distance between the base station and outdoor sensors is too great. Alter the position of the outdoor sensors. • Objects or shielding materials are obstructing the radio reception. Alter the position of the outdoor sensors and the base station. • The batteries of the outdoor sensors are too weak or flat. Insert new batteries into the sensors as an attempt. • Another transmitter on the same or neighbouring frequencies is disturbing the radio signal of the outdoor sensors. This can be, for example, radio headphones, radio loudspeakers or similar devices. Such products are not usually operated constantly; the radio reception can, for example, be perfect the next day; this makes the search for the cause more difficult. If possible, set another frequency on the instruments which can eliminate the reception problems of the weather station.
Disturbance of other instruments through the outdoor sensors	• The outdoor sensors transmit their data to the base station approx. every 3 minutes for a period of 0.1 (100ms) seconds. In this short period, disturbances in other devices are also possible. For example, a very short disturbance signal can be audible from a radio head phone every 3 minutes.
Problems with the synchronisation	• When inserting the batteries into the outdoor sensors and the base station (observe this order exactly!), these devices are in synchronisation mode. A data telegram is transmitted here every 4 seconds which accelerates the recognition and registration of the outdoor sensors at the base station. To enforce new synchronisation, remove the batteries from the base station and outdoor sensors. After that, wait at least 60 seconds before you insert the batteries into the outdoor sensors again and, lastly, into the base station (observe this order without fail – first of all insert the batteries into all existing outdoor sensors, only then into the base station. In doing so, however, all values/data which the base station has stored (e.g. minimum values, maximum values and date/time etc.), are lost. • Before you position the outdoor sensors, for example in your garden, carry out a function test as described at the beginning of section 7.

12. Range

The transmission range of the radio signals to the base station is 100 m under optimum conditions. This is often described as the „free field range”.

This ideal arrangement (e.g. base station and outdoor sensor on a smooth, level field without trees, houses etc.) is, however, never found in practice.

Normally, the base station is set up in the house, the combination in the garden and further outdoor sensors, for example in ancillary buildings or garage.

The range can be reduced considerably partly through:

- walls, reinforced steel ceilings
- coated/vapoured insulation glass panes
- vehicles
- trees, bushes, earth, rocks
- closeness to metal & conductive objects (e.g. radiators)
- closeness to the human body
- broadband disturbances, e.g. in residential area (DECT telephones, mobile telephones, radio head-phones, radio loudspeakers, other radio weather stations, baby phones etc.)
- closeness to electric motors. Transformers, network parts pr computers
- closeness to poorly shielded or openly operated computers or other electrical devices

As the local circumstances are different at every place of set-up, a certain range cannot be guaranteed.
If the base station is receiving no data from the combination sensor or any additionally existing outdoor sensors (in spite of new batteries), reduce the distance between the outdoor sensors and the base station, change the place of set-up .

Observe section 7 and 11 of these operating instructions.

13. Maintenance and cleaning

a) General

Check the technical safety of the product regularly, e.g. damage to the housing.

It can be assumed that operation is no longer ensured without risk if

- the device shows visible damage
- the device is no longer functional
- after longer periods of storage under unfavourable conditions or
- after heavy transport stress

Before cleaning or servicing the device, observe the following safety instructions without fail:

Remove the batteries before cleaning, servicing or carrying out repair work.
There are no parts in the interior requiring servicing; the device may not be opened. Repairs may only be carried out by a specialist who is familiar with the associated hazards and relevant regulations for the device.

b) Cleaning base station

Dust can be removed very easily with a vacuum cleaner and a clean, soft brush. Keep the opening of the vacuum cleaner close to the base station (do not come into contact, scratching possible!) and remove the dust with the brush. The dispersed dust will be sucked in by the vacuum cleaner. Use a soft, dry, lint-free cloth for cleaning the exterior of the product.

For greater contamination, you can use a cloth slightly moistened with warm water.

Never use aggressive cleaners or chemical solutions as the surface of the device or its functionality could be damaged as a result.

c) Cleaning outdoor sensors or combination sensor

After a longer period of operation in the open air, dirt can gather on the plastic surface of the outdoor sensors.
This can be removed very readily with a soft cloth which has been moistened with water.

Never spray the outdoor sensors with, for example, a garden hose as the outdoor sensors are only protected against rain from above and not against water jets from the side or from below.

The rain gauge should be monitored from time to time.

Depending on the location, leaves, particles of dirt carried by the wind, small twigs and similar can enter the cone collector of the rain gauge. Large parts can clog the flow-through!

Sand can also collect in the count rocker which will affect the measuring result negatively as it increases.

For this reason, the rain gauge should be cleaned at least once a year.

Proceed as follows:

- open the lower part of the rain gauge. To do this, turn the lower part approx. 1 cm to the left until you can let the metal nips slide downwards.
- remove the upper cone collector by turning it first of all a small distance to the right; then lift it off to the top.
- the rainfall sensor (the plastic part with the two brass pins and cable) can now be removed.

Make a note of the orientation; the connection cable of the rainfall sensor can be found at one side.

- Remove the count rocker.

Make a note of the orientation; there is a small magnet at one side of the count rocker.

- Now clean the components of the rain gauge. Think also of the drain hole in the plastic lower part of the rain gauge which you have pushed downwards at the metal pipe.

- To reassemble, place the count rocker first of all in the holder.

For this, the magnet of the count rocker has to relocated on the side which points to the cable.

The two lower trapezoid pins have to be inserted into the lower part of the holder correctly.
Only in this manner is it guaranteed that the count rocker can be moved easily.

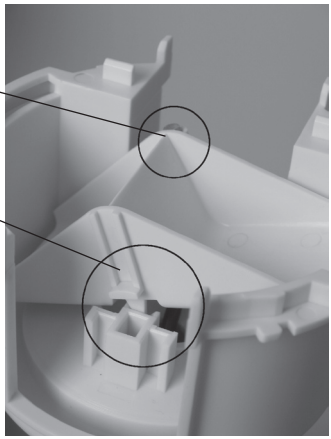

- Insert the rainfall sensor into its holder. It will hold the count rocker firmly automatically.

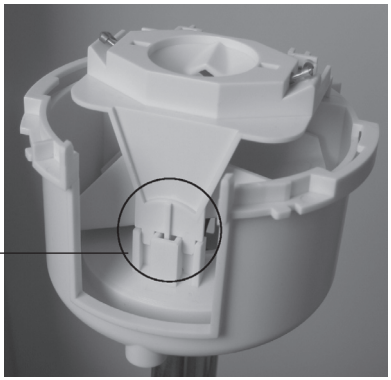

Only one orientation is correct; the cable of the rainfall sensor and the magnet of the count rocker have to be on the same side; the plastic nib on the other side has to be inserted precisely into the holder, look at the circle in the picture on the right.

- Place the cone collector from the top onto the sensor carrier and snap it in by turning it to the left.

- Push the lower part of the rain gauge housing upwards and lock it by turning it to the right until it snaps in.

The drain holes in the lower part of the housing have to point to the outside so that the water does not run on to the metal stands.

d) Aligning rain sensor

The measuring system of the rain gauge has already been set ex works to a high level of exactitude.
Any alignment is therefore normally not necessary.

The alignment process takes fairly long (at least 10 minutes) and has to be carried out very exactly and conscientiously as, otherwise, the exactitude is much lower than that which already exists.

Proceed as follows for alignment:

- First of all, set any rain quantity value which may have accumulated back to zero.
  For this, press the „RAIN“ key in normal display mode for about two seconds. After releasing the key, the display of the total rain quantity must indicate „0“.
- Make sure that the rain gauge is clean and the count rocker dry.
- Pour 100 ml of clear water very slowly (distributed over 10 minutes) into the cone collector of the rain sensor.

CAUTION!

If the water is poured too quickly, it results in an inaccurate measuring result. Pour the water into the cone so slowly that at no point of time water stands in the cone.

- The total quantity displayed should be 6.5 l/m^2.
- If any other value is displayed, the so-called rocker value is to be recalculated as follows:

$$\text{New rocker value} = \frac{6.5 \text{ x current rocker value}}{\text{Actual value (display after filling with water)}}$$

- This new value has to be entered in the configuration menu (see section 9. a), „enter alignment value of rain sensor“) .

It is always entered in ml/rocker beat, the unit on the right is the subsequent display unit of rain quantity!

The setting ex works is 295 ml/rocker beat (the ”current rocker value“ for the formula above).

14. Handling

Observe all the safety precautions in these operating instructions!

a) General

The product may not be opened or taken apart (except for the work described in these operating instructions, e.g. change of battery or cleaning the rain gauge).
There are no parts to be maintained by the user in the inside of the product.

The product will be damaged even if dropped from a low height.

b) Base station

Avoid the following adverse ambient conditions during operation or transport:

- moisture or excessive humidity
- extreme cold or heat direct sunlight
- dust or flammable gases, vapours or
- heavy vibration
- strong magnetic fields, such as, for example, in the vicinity of machines or speakers

Never use the product immediately if it has been taken from a cold area to a warm area. The condensation developing could in certain cases destroy the device.

Wait until the base station has reached room temperature. This can take some hours!

A place for set-up has to be selected so that the base station stands securely and cannot fall down. There is danger of injury due to its extreme heaviness.

Valuable or easily scratched furniture surfaces should be protected from damage by suitable mats before setting up the base station.

c) Combination sensor

Although the combination sensor is protected against rain from above, this is not the case, however, from the side or from below. Therefore, avoid any direct spraying, for example, through a garden hose or another watering system.

Select the place of set-up so that children cannot tip the combination sensor over; do not place the combination sensor in the proximity of vehicles, glass doors, windows or similar!

15. Terminology

Sensed temperature
See „windchill“.

Comfort indicator
The symbol of the comfort indicator (the three different „smiles“ ☺ 😐 ☹) reflect the room climate whereby the weather station works according to the following table:

Temperature	moisture 20%	30%	35%	40%	45%	50%	55%	60%	65%	70%
<18°C	☹	☹	☹	☹	☹	☹	☹	☹	☹	☹
18-19,9°C	☹	☹	☹	😐	😐	😐	😐	😐	😐	☹
20-21,9°C	☹	☹	☹	😐	☺	☺	☺	☺	😐	☹
22-23,9°C	☹	☹	😐	☺	☺	☺	☺	😐	☹	☹
24-25,9°C	☹	😐	☺	☺	☺	☺	😐	☹	☹	☹
26-27,9°C	☹	😐	😐	😐	😐	😐	😐	☹	☹	☹
over 28°C	☹	☹	☹	☹	☹	☹	☹	☹	☹	☹

Independent of the ratio temperature to humidity, there are clearly delimited areas which are defined as comfortable or uncomfortable climate.
For example, you feel humidity of under 30% to be too dry at a temperature of 25° C (e. g. heating air) and humidity of over approx. 60% to be humid.

Dewpoint
This concerns a temperature which is dependent on the coincidence of a certain air pressure, a certain temperature and a certain humidity.
The condensation of the humidity begins at this temperature point, the co-called thaw, the humidity condenses and comes down as liquid (mist, vapour).
If the melting point for water vapour lies at below 0° C, condensation will take place as snow or frost.

Weather forecast
The weather forecast of the weather station takes place by means of various weather symbols which are calculated from the rising or falling speed of the air temperature (tendency).
This speed of change in the air temperature is the decisive volume for forecast of the approaching weather, the absolute value plays a sub-ordinate role here. In general you can say that increasing air pressure signalises better weather while falling air pressure, on the other hand, means poor weather.

Windchill (equivalent temperature, sensed temperature)
The human being feels temperatures under certain circumstances quite differently from what a thermometer can show. In the case of low outdoor temperatures, you sense the temperature on the naked skin as being much lower the quicker any additional wind blows.

The „windchill“ is defined as a cooling down effect on the naked skin with a theoretical surface temperature of 33°C and a wind velocity of over 2.6 m/s.
The higher the wind velocity is and the lower the actual environment temperature, the more the windchill effect can be felt.
The „sensed temperature” is approximately comparable to the so-called felt temperature which, in addition, amongst other things, also takes into consideration the radiation effect of the sun, the light reflection of the clouds, the light wave length etc.

Wind strength table (Beaufort)

Beaufort	**Wind velocity**	**Description**
0	0 - 0.7km/h	calm
1	0.7 - 5.4 km/h	light draught
2	5.5 - 11.9 km/h	light breeze
3	12.0 - 19.4 km/h	weal breeze
4	19.5 - 28.5 km/h	moderate breeze
5	28.6 - 38.7 km/h	fresh breeze
6	38.8 - 49.8 km/h	strong wind
7	49.9 - 61.7 km/h	stiff wind
8	61.8 - 74.6 km/h	stormy wind
9	74.7 - 88.9 km/h	storm
10	89.0 - 102.4 km/h	heavy storm
11	102.5 - 117.4 km/h	gale-force storm
12	> 117.4 km/h	hurricane

16. Disposal

a) General

Dispose of the unusable product according to valid legal regulations

b) Disposing of used batteries and accumulators

You, as ultimate consumer, are required by law **(battery regulations)** to return all used batteries.
Disposing of used batteries with domestic waste is prohibited!

Batteries / accumulators containing toxins are marked by appropriate symbols which refer to the prohibition of disposal with domestic waste.
The designations for the decisive heavy metals are: **Cd** = cadmium, **Hg** = mercury, **Pb** = lead (The designation can be found on the battery under the dustbin symbol illustrated on the left).

You may return used batteries/accumulators free of charge to collecting stations, our outlets or anywhere else where batteries/accumulators are sold.

By doing so, you fulfil the legal requirements and contribute to the conservation of our environment.

17. Technical data

Measuring interval of the outdoor sensors:.....approx. 3 minutes
Measuring interval of the indoor sensor:.....approx. 10 minutes
Transmission frequency:..... 433.92 MHz
Range in the free field:..... (please observe Section 12)
Temperature range indoors: ..... 0°C to +59,9°C
Dissolution:.....0.1°C
Exactitude: .....±0.8°C (10–40°C)
Temperature range outdoors (combination sensor): .....-19.9°C to +79.9°C
Dissolution:.....0.1°C
Exactitude: .....±0.8°C (10–40°C)
Measurement range rel. humidity (indoors/outdoor): .....0% - 99 %
Dissolution:.....1%
Exactitude: .....±5% rH (30–70% rH)
Rain quantity display: ..... 0 to 999mm
Evaluation interval: ..... last hour: at xx:30 hrs; daily quantity: 7.30 a.m.
Dissolution:..... < 0.3 mm
Wind velocity:.....0-200km/h
Dissolution:.....up to 100km/h: 0.1km/h; over 100km/h: 1km/h
Voltage supply:
Base station:..... 4 x 1.5 V LR6, mignon, AA
Combination sensor: ..... 3 x 1.5 V LR6, mignon, AA
Dim. (B x H x D) base station: .....approx. 136 mm x 198 mm x 35 mm (without base)

18. FCC Information

FCC ID: RNT-WS250US

Changes or modifications not expressly approved in writing by ELV Electronics Limited may void the user's authority to operate the equipment.

NOTE: This equipment has been tested and found to comply with the limits for a Class B digital device, pursuant to Part 15 of the FCC Rules. These limits are designed to provide reasonable protection against harmful interference in a residential installation. This equipment generates, uses and can radiate radio frequency energy and, if not installed and used in accordance with the instructions, may cause harmful interference to radio communications. However, there is no guarantee that interference will not occur in a particular installation. If this equipment does cause harmful interference to radio or television reception, which can be determined by turning the equipment off and on, the user is encouraged to try to correct the interference by one or more of the following measures:

- Reorient or relocate the receiving antenna.
- Increase the separation between the equipment and receiver.
- Connect the equipment into an outlet on a circuit different from that to which the receiver is connected.
- Consult the dealer or an experienced radio/TV technician for help.

The internal antenna used for this mobile transmitter must provide a separation distance of at least 20 cm from all persons and must not be co-located or operating in conjunction with any other antenna or transmitter.

This device complies with Part 15 of the FCC Rules. Operation is subject to the following two conditions:

(1) this device may not cause harmful interference, and
(2) this device must accept any interference received, including interference that may cause undesired operation.

Appendix A: Table of latitude/longitude for US counties.

State	County	Latitude	Longitude
AL	Autauga County	32.5	273.4
AL	Baldwin County	30.6	272.3
AL	Barbour County	31.9	274.7
AL	Bibb County	33.0	272.9
AL	Blount County	34.0	273.4
AL	Bullock County	32.1	274.3
AL	Butler County	31.7	273.3
AL	Calhoun County	33.7	274.2
AL	Chambers County	32.9	274.7
AL	Cherokee County	34.2	274.4
AL	Chilton County	32.9	273.3
AL	Choctaw County	32.0	271.7
AL	Clarke County	31.7	272.2
AL	Clay County	33.3	274.2
AL	Cleburne County	33.6	274.5
AL	Coffee County	31.4	274.0
AL	Colbert County	34.7	272.3
AL	Conecuh County	31.4	273.0
AL	Coosa County	33.0	273.8
AL	Covington County	31.3	273.6
AL	Crenshaw County	31.7	273.7
AL	Cullman County	34.2	273.2
AL	Dale County	31.4	274.4
AL	Dallas County	32.4	272.9
AL	DeKalb County	34.5	274.2
AL	Elmore County	32.6	273.8
AL	Escambia County	31.1	272.8
AL	Etowah County	34.0	274.0
AL	Fayette County	33.7	272.2
AL	Franklin County	34.5	272.2
AL	Geneva County	31.1	274.2
AL	Greene County	32.8	272.0
AL	Hale County	32.8	272.4
AL	Henry County	31.5	274.7
AL	Houston County	31.2	274.6
AL	Jackson County	34.8	274.1
AL	Jefferson County	33.5	273.2
AL	Lamar County	33.8	271.9
AL	Lauderdale County	34.9	272.4
AL	Lawrence County	34.6	272.7
AL	Lee County	32.6	274.7
AL	Limestone County	34.8	273.0
AL	Lowndes County	32.2	273.3
AL	Macon County	32.4	274.3
AL	Madison County	34.7	273.4
AL	Marengo County	32.3	272.2
AL	Marion County	34.1	272.1
AL	Marshall County	34.3	273.7
AL	Mobile County	30.7	271.9
AL	Monroe County	31.6	272.6
AL	Montgomery County	32.3	273.7
AL	Morgan County	34.5	273.1
AL	Perry County	32.6	272.7
AL	Pickens County	33.3	271.9
AL	Pike County	31.8	274.1
AL	Randolph County	33.3	274.6
AL	Russell County	32.4	274.9
AL	St. Clair County	33.7	273.7
AL	Shelby County	33.3	273.3
AL	Sumter County	32.6	271.8
AL	Talladega County	33.4	273.8
AL	Tallapoosa County	32.9	274.2
AL	Tuscaloosa County	33.2	272.5
AL	Walker County	33.8	272.7
AL	Washington County	31.4	271.8
AL	Wilcox County	32.0	272.7
AL	Winston County	34.2	272.6
AK	Aleutians East Borough	55.1	198.0
AK	Aleutians West	52.3	187.5
AK	Anchorage Municipality	61.2	210.2
AK	Bethel	60.9	198.8
AK	Bristol Bay Borough	58.7	203.2
AK	Denali Borough	63.9	210.9
AK	Dillingham	59.2	201.4
AK	Fairbanks North Star Borough	64.8	212.4
AK	Haines Borough	59.2	224.5
AK	Juneau City and Borough	58.4	225.5
AK	Kenai Peninsula Borough	60.3	209.0
AK	Ketchikan Gateway Borough	55.4	228.4
AK	Kodiak Island Borough	57.7	207.3
AK	Lake and Peninsula Borough	58.6	203.6
AK	Matanuska-Susitna Borough	61.8	210.5
AK	Nome Census Area	64.8	195.7
AK	North Slope Borough	70.6	206.1
AK	Northwest Arctic Borough	66.8	199.4
AK	Prince of Wales	55.6	227.4
AK	Sitka City and Borough	57.1	224.7
AK	Skagway-Hoonah-Angoon	58.3	224.5
AK	Southeast Fairbanks	63.6	216.1
AK	Valdez-Cordova	61.5	214.7
AK	Wade Hampton	62.1	196.3
AK	Wrangell-Petersburg	56.7	226.9
AK	Yakutat City and Borough	59.8	219.7
AK	Yukon-Koyukuk	65.1	208.1
AZ	Apache County	35.6	250.6
AZ	Cochise County	31.8	250.1
AZ	Coconino County	35.8	248.5
AZ	Gila County	33.7	249.0
AZ	Graham County	32.9	250.2
AZ	Greenlee County	33.1	250.7
AZ	La Paz County	33.9	246.0
AZ	Maricopa County	33.5	247.9
AZ	Mohave County	35.3	245.9
AZ	Navajo County	35.4	249.7
AZ	Pima County	32.2	248.9
AZ	Pinal County	33.0	248.5
AZ	Santa Cruz County	31.5	249.1
AZ	Yavapai County	34.7	247.6
AZ	Yuma County	32.7	245.6
AR	Arkansas County	34.4	268.6
AR	Ashley County	33.2	268.2
AR	Baxter County	36.3	267.6
AR	Benton County	36.4	265.8
AR	Boone County	36.3	266.9
AR	Bradley County	33.5	267.9
AR	Calhoun County	33.6	267.5
AR	Carroll County	36.4	266.4
AR	Chicot County	33.3	268.7
AR	Clark County	34.1	266.8
AR	Clay County	36.4	269.6
AR	Cleburne County	35.5	267.9
AR	Cleveland County	33.9	267.8
AR	Columbia County	33.2	266.8
AR	Conway County	35.2	267.3
AR	Craighead County	35.8	269.4
AR	Crawford County	35.5	265.7
AR	Crittenden County	35.2	269.7
AR	Cross County	35.3	269.2
AR	Dallas County	33.9	267.4
AR	Desha County	33.8	268.6
AR	Drew County	33.6	268.3
AR	Faulkner County	35.1	267.6
AR	Franklin County	35.5	266.1
AR	Fulton County	36.4	268.3
AR	Garland County	34.5	266.9
AR	Grant County	34.3	267.5
AR	Greene County	36.1	269.5
AR	Hempstead County	33.7	266.4
AR	Hot Spring County	34.3	267.1
AR	Howard County	34.1	266.0
AR	Independence County	35.8	268.4
AR	Izard County	36.1	268.1
AR	Jackson County	35.6	268.8
AR	Jefferson County	34.2	268.0
AR	Johnson County	35.5	266.5
AR	Lafayette County	33.3	266.4
AR	Lawrence County	36.1	268.9
AR	Lee County	34.8	269.2
AR	Lincoln County	34.0	268.3
AR	Little River County	33.7	265.8
AR	Logan County	35.2	266.2
AR	Lonoke County	34.8	268.1
AR	Madison County	36.0	266.3
AR	Marion County	36.3	267.3
AR	Miller County	33.4	266.0
AR	Mississippi County	35.8	270.0
AR	Monroe County	34.7	268.8
AR	Montgomery County	34.6	266.4
AR	Nevada County	33.7	266.7
AR	Newton County	36.0	266.8
AR	Ouachita County	33.6	267.1
AR	Perry County	35.0	267.1
AR	Phillips County	34.5	269.2
AR	Pike County	34.2	266.3
AR	Poinsett County	35.6	269.4
AR	Polk County	34.5	265.7
AR	Pope County	35.3	266.9
AR	Prairie County	34.8	268.5
AR	Pulaski County	34.8	267.7

Source: US Census Bureau. Data is provided "as-is". Not responsible for errors.

AR	Randolph County	36.3	269.0
AR	St. Francis County	35.0	269.3
AR	Saline County	34.6	267.4
AR	Scott County	34.9	265.9
AR	Searcy County	35.9	267.3
AR	Sebastian County	35.3	265.6
AR	Sevier County	34.0	265.7
AR	Sharp County	36.2	268.5
AR	Stone County	35.9	267.8
AR	Union County	33.2	267.4
AR	Van Buren County	35.6	267.6
AR	Washington County	36.1	265.8
AR	White County	35.3	268.3
AR	Woodruff County	35.2	268.8
AR	Yell County	35.0	266.6
CA	Alameda County	37.7	237.9
CA	Alpine County	38.6	240.1
CA	Amador County	38.4	239.3
CA	Butte County	39.6	238.4
CA	Calaveras County	38.2	239.4
CA	Colusa County	39.2	237.8
CA	Contra Costa County	37.9	237.9
CA	Del Norte County	41.7	235.9
CA	El Dorado County	38.8	239.4
CA	Fresno County	36.6	240.1
CA	Glenn County	39.6	237.7
CA	Humboldt County	40.7	236.0
CA	Imperial County	33.0	244.5
CA	Inyo County	36.7	242.3
CA	Kern County	35.3	241.3
CA	Kings County	36.2	240.2
CA	Lake County	39.0	237.2
CA	Lassen County	40.6	239.3
CA	Los Angeles County	34.1	241.8
CA	Madera County	37.0	240.0
CA	Marin County	38.0	237.4
CA	Mariposa County	37.6	240.0
CA	Mendocino County	39.4	236.6
CA	Merced County	37.2	239.3
CA	Modoc County	41.5	239.2
CA	Mono County	37.9	241.0
CA	Monterey County	36.5	238.5
CA	Napa County	38.4	237.7
CA	Nevada County	39.3	239.2
CA	Orange County	33.7	242.1
CA	Placer County	39.0	239.1
CA	Plumas County	40.0	239.1
CA	Riverside County	33.8	243.2
CA	Sacramento County	38.6	238.6
CA	San Benito County	36.7	238.7
CA	San Bernardino County	34.4	243.0
CA	San Diego County	32.9	242.9
CA	San Francisco County	37.8	237.6
CA	San Joaquin County	37.9	238.7
CA	San Luis Obispo County	35.4	239.4
CA	San Mateo County	37.5	237.7
CA	Santa Barbara County	34.6	239.9
CA	Santa Clara County	37.3	238.1
CA	Santa Cruz County	37.0	238.0
CA	Shasta County	40.7	237.9
CA	Sierra County	39.6	239.5
CA	Siskiyou County	41.6	237.5
CA	Solano County	38.2	237.9
CA	Sonoma County	38.4	237.2
CA	Stanislaus County	37.6	239.0
CA	Sutter County	39.1	238.3
CA	Tehama County	40.1	237.9
CA	Trinity County	40.7	236.9
CA	Tulare County	36.2	240.8
CA	Tuolumne County	38.0	239.8
CA	Ventura County	34.3	241.0
CA	Yolo County	38.6	238.2
CA	Yuba County	39.2	238.6
CO	Adams County	39.9	255.1
CO	Alamosa County	37.5	254.2
CO	Arapahoe County	39.6	255.2
CO	Archuleta County	37.2	252.9
CO	Baca County	37.3	257.5
CO	Bent County	38.1	256.9
CO	Boulder County	40.1	254.8
CO	Chaffee County	38.7	253.9
CO	Cheyenne County	38.8	257.5
CO	Clear Creek County	39.7	254.4
CO	Conejos County	37.2	253.9
CO	Costilla County	37.3	254.5
CO	Crowley County	38.2	256.2
CO	Custer County	38.1	254.6
CO	Delta County	38.8	252.1
CO	Denver County	39.7	255.0
CO	Dolores County	37.8	251.4
CO	Douglas County	39.5	255.1
CO	Eagle County	39.6	253.3
CO	Elbert County	39.3	255.7
CO	El Paso County	38.9	255.3
CO	Fremont County	38.4	254.7
CO	Garfield County	39.5	252.3
CO	Gilpin County	39.8	254.5
CO	Grand County	40.1	253.9
CO	Gunnison County	38.6	253.0
CO	Hinsdale County	37.8	252.7
CO	Huerfano County	37.6	255.0
CO	Jackson County	40.6	253.7
CO	Jefferson County	39.7	254.9
CO	Kiowa County	38.4	257.4
CO	Kit Carson County	39.3	257.5
CO	Lake County	39.2	253.7
CO	La Plata County	37.3	252.2
CO	Larimer County	40.5	254.8
CO	Las Animas County	37.2	255.6
CO	Lincoln County	39.1	256.4
CO	Logan County	40.7	256.9
CO	Mesa County	39.1	251.5
CO	Mineral County	37.7	253.1
CO	Moffat County	40.6	251.9
CO	Montezuma County	37.4	251.4
CO	Montrose County	38.4	251.8
CO	Morgan County	40.3	256.2
CO	Otero County	38.0	256.3
CO	Ouray County	38.1	252.2
CO	Park County	39.2	254.3
CO	Phillips County	40.6	257.6
CO	Pitkin County	39.2	253.1
CO	Prowers County	38.1	257.6
CO	Pueblo County	38.2	255.4
CO	Rio Blanco County	40.0	251.7
CO	Rio Grande County	37.6	253.7
CO	Routt County	40.5	253.1
CO	Saguache County	38.1	253.8
CO	San Juan County	37.8	252.3
CO	San Miguel County	38.0	251.6
CO	Sedgwick County	40.9	257.7
CO	Summit County	39.6	253.9
CO	Teller County	38.9	254.8
CO	Washington County	40.1	256.9
CO	Weld County	40.3	255.3
CO	Yuma County	40.0	257.5
CT	Fairfield County	41.2	286.6
CT	Hartford County	41.8	287.3
CT	Litchfield County	41.8	286.8
CT	Middlesex County	41.4	287.5
CT	New Haven County	41.4	287.1
CT	New London County	41.4	287.9
CT	Tolland County	41.9	287.6
CT	Windham County	41.8	288.0
DE	Kent County	39.1	284.4
DE	New Castle County	39.7	284.4
DE	Sussex County	38.7	284.7
DC	District of Columbia	38.9	283.0
FL	Alachua County	29.7	277.6
FL	Baker County	30.3	277.8
FL	Bay County	30.2	274.4
FL	Bradford County	29.9	277.9
FL	Brevard County	28.2	279.3
FL	Broward County	26.1	279.8
FL	Calhoun County	30.4	274.8
FL	Charlotte County	27.0	277.9
FL	Citrus County	28.9	277.5
FL	Clay County	30.0	278.2
FL	Collier County	26.2	278.3
FL	Columbia County	30.2	277.4
FL	DeSoto County	27.2	278.1
FL	Dixie County	29.6	276.9
FL	Duval County	30.3	278.4
FL	Escambia County	30.5	272.7
FL	Flagler County	29.5	278.8
FL	Franklin County	29.8	275.2
FL	Gadsden County	30.6	275.4
FL	Gilchrist County	29.7	277.2
FL	Glades County	26.9	278.8
FL	Gulf County	29.9	274.7
FL	Hamilton County	30.5	277.1
FL	Hardee County	27.5	278.2
FL	Hendry County	26.7	278.8
FL	Hernando County	28.5	277.5
FL	Highlands County	27.4	278.6
FL	Hillsborough County	28.0	277.6
FL	Holmes County	30.9	274.2
FL	Indian River County	27.7	279.5
FL	Jackson County	30.8	274.8
FL	Jefferson County	30.5	276.1

Source: US Census Bureau. Data is provided "as-is". Not responsible for errors.

FL	Lafayette County	30.0	276.8
FL	Lake County	28.8	278.3
FL	Lee County	26.6	278.2
FL	Leon County	30.5	275.7
FL	Levy County	29.3	277.3
FL	Liberty County	30.3	275.1
FL	Madison County	30.4	276.6
FL	Manatee County	27.5	277.5
FL	Marion County	29.1	277.9
FL	Martin County	27.1	279.7
FL	Miami-Dade County	25.8	279.7
FL	Monroe County	24.8	278.8
FL	Nassau County	30.6	278.3
FL	Okaloosa County	30.6	273.4
FL	Okeechobee County	27.3	279.1
FL	Orange County	28.5	278.6
FL	Osceola County	28.2	278.7
FL	Palm Beach County	26.6	279.8
FL	Pasco County	28.3	277.5
FL	Pinellas County	27.9	277.3
FL	Polk County	28.0	278.2
FL	Putnam County	29.6	278.2
FL	St. Johns County	29.9	278.6
FL	St. Lucie County	27.3	279.6
FL	Santa Rosa County	30.6	273.0
FL	Sarasota County	27.2	277.6
FL	Seminole County	28.7	278.7
FL	Sumter County	28.8	277.9
FL	Suwannee County	30.2	277.0
FL	Taylor County	30.1	276.4
FL	Union County	30.0	277.6
FL	Volusia County	29.0	278.9
FL	Wakulla County	30.1	275.6
FL	Walton County	30.6	273.8
FL	Washington County	30.6	274.4
GA	Appling County	31.7	277.7
GA	Atkinson County	31.3	277.1
GA	Bacon County	31.6	277.5
GA	Baker County	31.3	275.6
GA	Baldwin County	33.1	276.8
GA	Banks County	34.3	276.5
GA	Barrow County	34.0	276.3
GA	Bartow County	34.2	275.2
GA	Ben Hill County	31.7	276.7
GA	Berrien County	31.2	276.8
GA	Bibb County	32.8	276.3
GA	Bleckley County	32.4	276.7
GA	Brantley County	31.2	278.0
GA	Brooks County	30.9	276.4
GA	Bryan County	32.1	278.6
GA	Bulloch County	32.4	278.2
GA	Burke County	33.1	278.0
GA	Butts County	33.3	276.0
GA	Calhoun County	31.5	275.3
GA	Camden County	30.9	278.3
GA	Candler County	32.4	277.9
GA	Carroll County	33.6	274.9
GA	Catoosa County	34.9	274.8
GA	Charlton County	30.8	277.9
GA	Chatham County	32.0	278.9
GA	Chattahoochee County	32.3	275.2
GA	Chattooga County	34.5	274.6
GA	Cherokee County	34.2	275.5
GA	Clarke County	34.0	276.6
GA	Clay County	31.6	275.0
GA	Clayton County	33.6	275.6
GA	Clinch County	30.9	277.3
GA	Cobb County	33.9	275.4
GA	Coffee County	31.5	277.2
GA	Colquitt County	31.2	276.2
GA	Columbia County	33.5	277.8
GA	Cook County	31.2	276.6
GA	Coweta County	33.4	275.2
GA	Crawford County	32.7	276.0
GA	Crisp County	31.9	276.2
GA	Dade County	34.9	274.5
GA	Dawson County	34.4	275.9
GA	Decatur County	30.9	275.4
GA	DeKalb County	33.8	275.7
GA	Dodge County	32.2	276.8
GA	Dooly County	32.2	276.2
GA	Dougherty County	31.6	275.8
GA	Douglas County	33.7	275.3
GA	Early County	31.3	275.1
GA	Echols County	30.7	277.1
GA	Effingham County	32.3	278.7
GA	Elbert County	34.1	277.1
GA	Emanuel County	32.6	277.7
GA	Evans County	32.2	278.1
GA	Fannin County	34.9	275.7
GA	Fayette County	33.4	275.5
GA	Floyd County	34.3	274.8
GA	Forsyth County	34.2	275.9
GA	Franklin County	34.4	276.8
GA	Fulton County	33.8	275.6
GA	Gilmer County	34.7	275.5
GA	Glascock County	33.2	277.4
GA	Glynn County	31.2	278.5
GA	Gordon County	34.5	275.1
GA	Grady County	30.9	275.8
GA	Greene County	33.6	276.8
GA	Gwinnett County	34.0	275.9
GA	Habersham County	34.6	276.5
GA	Hall County	34.3	276.2
GA	Hancock County	33.3	277.0
GA	Haralson County	33.8	274.8
GA	Harris County	32.7	275.1
GA	Hart County	34.4	277.0
GA	Heard County	33.3	274.9
GA	Henry County	33.5	275.8
GA	Houston County	32.6	276.3
GA	Irwin County	31.6	276.7
GA	Jackson County	34.1	276.4
GA	Jasper County	33.3	276.3
GA	Jeff Davis County	31.8	277.4
GA	Jefferson County	33.1	277.6
GA	Jenkins County	32.8	278.0
GA	Johnson County	32.7	277.3
GA	Jones County	33.0	276.5
GA	Lamar County	33.1	275.8
GA	Lanier County	31.0	276.9
GA	Laurens County	32.5	277.1
GA	Lee County	31.7	275.8
GA	Liberty County	31.8	278.5
GA	Lincoln County	33.8	277.5
GA	Long County	31.8	278.2
GA	Lowndes County	30.8	276.7
GA	Lumpkin County	34.5	276.0
GA	McDuffie County	33.5	277.5
GA	McIntosh County	31.5	278.6
GA	Macon County	32.4	276.0
GA	Madison County	34.1	276.8
GA	Marion County	32.4	275.5
GA	Meriwether County	33.0	275.3
GA	Miller County	31.2	275.3
GA	Mitchell County	31.2	275.8
GA	Monroe County	33.0	276.1
GA	Montgomery County	32.2	277.5
GA	Morgan County	33.6	276.5
GA	Murray County	34.8	275.2
GA	Muscogee County	32.5	275.1
GA	Newton County	33.6	276.1
GA	Oconee County	33.9	276.6
GA	Oglethorpe County	33.9	276.9
GA	Paulding County	33.9	275.2
GA	Peach County	32.6	276.2
GA	Pickens County	34.5	275.6
GA	Pierce County	31.3	277.8
GA	Pike County	33.1	275.6
GA	Polk County	34.0	274.8
GA	Pulaski County	32.2	276.5
GA	Putnam County	33.3	276.6
GA	Quitman County	31.9	275.0
GA	Rabun County	34.9	276.6
GA	Randolph County	31.8	275.3
GA	Richmond County	33.4	278.0
GA	Rockdale County	33.7	276.0
GA	Schley County	32.2	275.7
GA	Screven County	32.7	278.4
GA	Seminole County	31.0	275.1
GA	Spalding County	33.3	275.7
GA	Stephens County	34.6	276.7
GA	Stewart County	32.1	275.2
GA	Sumter County	32.1	275.8
GA	Talbot County	32.7	275.5
GA	Taliaferro County	33.6	277.1
GA	Tattnall County	32.0	278.0
GA	Taylor County	32.5	275.8
GA	Telfair County	32.0	277.1
GA	Terrell County	31.8	275.6
GA	Thomas County	30.9	276.1
GA	Tift County	31.5	276.5
GA	Toombs County	32.2	277.6
GA	Towns County	34.9	276.2
GA	Treutlen County	32.4	277.4
GA	Troup County	33.0	275.0
GA	Turner County	31.7	276.4
GA	Twiggs County	32.7	276.6
GA	Union County	34.9	276.0
GA	Upson County	32.9	275.7

Source: US Census Bureau. Data is provided "as-is". Not responsible for errors.

GA	Walker County	34.8	274.7
GA	Walton County	33.8	276.3
GA	Ware County	31.2	277.6
GA	Warren County	33.4	277.3
GA	Washington County	32.9	277.2
GA	Wayne County	31.6	278.1
GA	Webster County	32.0	275.4
GA	Wheeler County	32.1	277.3
GA	White County	34.6	276.3
GA	Whitfield County	34.8	275.0
GA	Wilcox County	32.0	276.5
GA	Wilkes County	33.8	277.3
GA	Wilkinson County	32.8	276.8
GA	Worth County	31.6	276.2
HI	Hawaii County	19.7	204.6
HI	Honolulu County	21.4	202.0
HI	Kalawao County	21.2	203.0
HI	Kauai County	22.0	200.5
HI	Maui County	20.9	203.4
ID	Ada County	43.6	243.7
ID	Adams County	44.9	243.6
ID	Bannock County	42.8	247.7
ID	Bear Lake County	42.3	248.6
ID	Benewah County	47.2	243.4
ID	Bingham County	43.2	247.6
ID	Blaine County	43.4	245.8
ID	Boise County	44.0	244.1
ID	Bonner County	48.3	243.3
ID	Bonneville County	43.5	248.1
ID	Boundary County	48.8	243.6
ID	Butte County	43.7	246.8
ID	Camas County	43.4	245.2
ID	Canyon County	43.6	243.3
ID	Caribou County	42.7	248.3
ID	Cassia County	42.4	246.4
ID	Clark County	44.2	247.7
ID	Clearwater County	46.7	244.1
ID	Custer County	44.2	245.9
ID	Elmore County	43.1	244.5
ID	Franklin County	42.2	248.1
ID	Fremont County	44.2	248.5
ID	Gem County	44.0	243.5
ID	Gooding County	42.9	245.2
ID	Idaho County	45.9	244.1
ID	Jefferson County	43.8	247.9
ID	Jerome County	42.7	245.7
ID	Kootenai County	47.7	243.2
ID	Latah County	46.8	243.2
ID	Lemhi County	44.9	246.2
ID	Lewis County	46.2	243.6
ID	Lincoln County	43.0	245.8
ID	Madison County	43.8	248.3
ID	Minidoka County	42.7	246.3
ID	Nez Perce County	46.4	243.1
ID	Oneida County	42.2	247.6
ID	Owyhee County	42.8	243.8
ID	Payette County	44	243.1
ID	Power County	42.8	247.2
ID	Shoshone County	47.4	244.0
ID	Teton County	43.7	248.9
ID	Twin Falls County	42.5	245.4
ID	Valley County	44.7	244.1
ID	Washington County	44.4	243.1
IL	Adams County	40.0	268.7
IL	Alexander County	37.1	270.7
IL	Bond County	38.9	270.6
IL	Boone County	42.3	271.2
IL	Brown County	40.0	269.3
IL	Bureau County	41.4	270.5
IL	Calhoun County	39.2	269.3
IL	Carroll County	42.1	270.0
IL	Cass County	40.0	269.7
IL	Champaign County	40.1	271.8
IL	Christian County	39.5	270.7
IL	Clark County	39.3	272.2
IL	Clay County	38.7	271.5
IL	Clinton County	38.6	270.6
IL	Coles County	39.5	271.7
IL	Cook County	41.8	272.2
IL	Crawford County	39.0	272.2
IL	Cumberland County	39.3	271.7
IL	DeKalb County	41.9	271.3
IL	De Witt County	40.2	271.1
IL	Douglas County	39.8	271.8
IL	DuPage County	41.9	271.9
IL	Edgar County	39.7	272.3
IL	Edwards County	38.4	272.0
IL	Effingham County	39.1	271.4
IL	Fayette County	39.0	271.0
IL	Ford County	40.6	271.8
IL	Franklin County	38.0	271.0
IL	Fulton County	40.5	269.8
IL	Gallatin County	37.8	271.8
IL	Greene County	39.4	269.6
IL	Grundy County	41.3	271.6
IL	Hamilton County	38.1	271.5
IL	Hancock County	40.4	268.8
IL	Hardin County	37.5	271.7
IL	Henderson County	40.8	269.1
IL	Henry County	41.4	269.9
IL	Iroquois County	40.7	272.2
IL	Jackson County	37.8	270.7
IL	Jasper County	39.0	271.9
IL	Jefferson County	38.3	271.1
IL	Jersey County	39.1	269.7
IL	Jo Daviess County	42.4	269.8
IL	Johnson County	37.5	271.1
IL	Kane County	41.9	271.7
IL	Kankakee County	41.1	272.2
IL	Kendall County	41.6	271.6
IL	Knox County	40.9	269.7
IL	Lake County	42.3	272
IL	La Salle County	41.3	271.1
IL	Lawrence County	38.7	272.3
IL	Lee County	41.8	270.6
IL	Livingston County	40.9	271.4
IL	Logan County	40.1	270.6
IL	McDonough County	40.5	269.3
IL	McHenry County	42.3	271.6
IL	McLean County	40.5	271.1
IL	Macon County	39.9	271.0
IL	Macoupin County	39.2	270.1
IL	Madison County	38.8	270.0
IL	Marion County	38.6	271.0
IL	Marshall County	41.0	270.7
IL	Mason County	40.3	270.1
IL	Massac County	37.2	271.3
IL	Menard County	40.0	270.2
IL	Mercer County	41.2	269.3
IL	Monroe County	38.3	269.8
IL	Montgomery County	39.2	270.5
IL	Morgan County	39.7	269.8
IL	Moultrie County	39.6	271.4
IL	Ogle County	42.0	270.7
IL	Peoria County	40.8	270.3
IL	Perry County	38.1	270.7
IL	Piatt County	40.0	271.4
IL	Pike County	39.6	269.1
IL	Pope County	37.4	271.4
IL	Pulaski County	37.2	270.9
IL	Putnam County	41.2	270.7
IL	Randolph County	38.1	270.2
IL	Richland County	38.7	271.9
IL	Rock Island County	41.5	269.5
IL	St. Clair County	38.5	270
IL	Saline County	37.8	271.5
IL	Sangamon County	39.8	270.4
IL	Schuyler County	40.1	269.4
IL	Scott County	39.6	269.5
IL	Shelby County	39.4	271.2
IL	Stark County	41.1	270.2
IL	Stephenson County	42.3	270.4
IL	Tazewell County	40.6	270.5
IL	Union County	37.5	270.8
IL	Vermilion County	40.2	272.3
IL	Wabash County	38.4	272.2
IL	Warren County	40.9	269.4
IL	Washington County	38.4	270.6
IL	Wayne County	38.4	271.6
IL	White County	38.1	271.8
IL	Whiteside County	41.8	270.1
IL	Will County	41.5	272.0
IL	Williamson County	37.7	271.0
IL	Winnebago County	42.3	270.9
IL	Woodford County	40.8	270.8
IN	Adams County	40.7	275.1
IN	Allen County	41.1	274.9
IN	Bartholomew County	39.2	274.1
IN	Benton County	40.6	272.7
IN	Blackford County	40.5	274.7
IN	Boone County	40.0	273.5
IN	Brown County	39.2	273.8
IN	Carroll County	40.6	273.4
IN	Cass County	40.7	273.7
IN	Clark County	38.4	274.3
IN	Clay County	39.4	272.9
IN	Clinton County	40.3	273.5
IN	Crawford County	38.3	273.6
IN	Daviess County	38.7	272.9
IN	Dearborn County	39.1	275.1

Source: US Census Bureau. Data is provided "as-is". Not responsible for errors.

IN	Decatur County	39.3	274.5
IN	DeKalb County	41.4	275.0
IN	Delaware County	40.2	274.6
IN	Dubois County	38.4	273.1
IN	Elkhart County	41.6	274.1
IN	Fayette County	39.6	274.8
IN	Floyd County	38.3	274.1
IN	Fountain County	40.1	272.7
IN	Franklin County	39.4	274.9
IN	Fulton County	41.1	273.8
IN	Gibson County	38.3	272.4
IN	Grant County	40.5	274.4
IN	Greene County	39.1	273.0
IN	Hamilton County	40.0	273.9
IN	Hancock County	39.8	274.2
IN	Harrison County	38.2	273.9
IN	Hendricks County	39.8	273.5
IN	Henry County	39.9	274.6
IN	Howard County	40.5	273.9
IN	Huntington County	40.8	274.5
IN	Jackson County	38.9	274.0
IN	Jasper County	41.0	272.9
IN	Jay County	40.4	275.0
IN	Jefferson County	38.8	274.6
IN	Jennings County	39.0	274.4
IN	Johnson County	39.5	273.9
IN	Knox County	38.7	272.6
IN	Kosciusko County	41.3	274.2
IN	LaGrange County	41.6	274.6
IN	Lake County	41.5	272.6
IN	LaPorte County	41.6	273.2
IN	Lawrence County	38.8	273.5
IN	Madison County	40.1	274.3
IN	Marion County	39.8	273.9
IN	Marshall County	41.3	273.7
IN	Martin County	38.7	273.2
IN	Miami County	40.8	273.9
IN	Monroe County	39.2	273.5
IN	Montgomery County	40.0	273.1
IN	Morgan County	39.5	273.6
IN	Newton County	41.0	272.6
IN	Noble County	41.4	274.6
IN	Ohio County	38.9	275.1
IN	Orange County	38.6	273.5
IN	Owen County	39.3	273.2
IN	Parke County	39.8	272.8
IN	Perry County	38.0	273.3
IN	Pike County	38.4	272.8
IN	Porter County	41.5	272.9
IN	Posey County	38.0	272.2
IN	Pulaski County	41.0	273.3
IN	Putnam County	39.7	273.2
IN	Randolph County	40.2	275
IN	Ripley County	39.2	274.8
IN	Rush County	39.6	274.5
IN	St. Joseph County	41.7	273.8
IN	Scott County	38.7	274.2
IN	Shelby County	39.5	274.2
IN	Spencer County	38.0	273.0
IN	Starke County	41.3	273.3
IN	Steuben County	41.7	275.0
IN	Sullivan County	39.1	272.6
IN	Switzerland County	38.8	275.0
IN	Tippecanoe County	40.4	273.1
IN	Tipton County	40.3	274.0
IN	Union County	39.6	275.1
IN	Vanderburgh County	38.0	272.4
IN	Vermillion County	39.8	272.6
IN	Vigo County	39.5	272.6
IN	Wabash County	40.9	274.2
IN	Warren County	40.3	272.6
IN	Warrick County	38.0	272.7
IN	Washington County	38.6	273.9
IN	Wayne County	39.8	275.0
IN	Wells County	40.7	274.8
IN	White County	40.7	273.2
IN	Whitley County	41.2	274.5
IA	Adair County	41.3	265.5
IA	Adams County	41.0	265.3
IA	Allamakee County	43.3	268.6
IA	Appanoose County	40.8	267.1
IA	Audubon County	41.7	265.1
IA	Benton County	42.1	267.9
IA	Black Hawk County	42.5	267.7
IA	Boone County	42.0	266.1
IA	Bremer County	42.8	267.7
IA	Buchanan County	42.5	268.1
IA	Buena Vista County	42.7	264.8
IA	Butler County	42.7	267.2
IA	Calhoun County	42.4	265.4
IA	Carroll County	42.0	265.1
IA	Cass County	41.4	265.0
IA	Cedar County	41.8	268.9
IA	Cerro Gordo County	43.1	266.7
IA	Cherokee County	42.7	264.4
IA	Chickasaw County	43.1	267.7
IA	Clarke County	41.0	266.2
IA	Clay County	43.1	264.8
IA	Clayton County	42.9	268.7
IA	Clinton County	41.9	269.6
IA	Crawford County	42.0	264.6
IA	Dallas County	41.7	266.0
IA	Davis County	40.7	267.6
IA	Decatur County	40.7	266.2
IA	Delaware County	42.5	268.6
IA	Des Moines County	40.9	268.8
IA	Dickinson County	43.4	264.9
IA	Dubuque County	42.5	269.2
IA	Emmet County	43.4	265.3
IA	Fayette County	42.8	268.1
IA	Floyd County	43.1	267.2
IA	Franklin County	42.7	266.8
IA	Fremont County	40.7	264.4
IA	Greene County	42.0	265.6
IA	Grundy County	42.4	267.2
IA	Guthrie County	41.7	265.5
IA	Hamilton County	42.4	266.3
IA	Hancock County	43.1	266.3
IA	Hardin County	42.4	266.8
IA	Harrison County	41.7	264.2
IA	Henry County	41.0	268.5
IA	Howard County	43.4	267.7
IA	Humboldt County	42.8	265.8
IA	Ida County	42.4	264.5
IA	Iowa County	41.7	267.9
IA	Jackson County	42.2	269.4
IA	Jasper County	41.7	266.9
IA	Jefferson County	41.0	268.0
IA	Johnson County	41.7	268.4
IA	Jones County	42.1	268.8
IA	Keokuk County	41.3	267.8
IA	Kossuth County	43.2	265.8
IA	Lee County	40.6	268.6
IA	Linn County	42.0	268.4
IA	Louisa County	41.2	268.7
IA	Lucas County	41.0	266.7
IA	Lyon County	43.4	263.8
IA	Madison County	41.3	266.0
IA	Mahaska County	41.3	267.4
IA	Marion County	41.3	266.9
IA	Marshall County	42.0	267.0
IA	Mills County	41.0	264.4
IA	Mitchell County	43.3	267.2
IA	Monona County	42.1	264.0
IA	Monroe County	41.0	267.2
IA	Montgomery County	41.0	264.8
IA	Muscatine County	41.5	268.9
IA	O'Brien County	43.1	264.4
IA	Osceola County	43.4	264.4
IA	Page County	40.7	264.8
IA	Palo Alto County	43.1	265.3
IA	Plymouth County	42.8	263.8
IA	Pocahontas County	42.7	265.3
IA	Polk County	41.6	266.4
IA	Pottawattamie County	41.3	264.3
IA	Poweshiek County	41.7	267.5
IA	Ringgold County	40.7	265.8
IA	Sac County	42.4	264.9
IA	Scott County	41.6	269.4
IA	Shelby County	41.7	264.7
IA	Sioux County	43.1	263.8
IA	Story County	42.0	266.5
IA	Tama County	42.1	267.5
IA	Taylor County	40.7	265.3
IA	Union County	41.0	265.7
IA	Van Buren County	40.7	268.1
IA	Wapello County	41.0	267.6
IA	Warren County	41.4	266.4
IA	Washington County	41.3	268.3
IA	Wayne County	40.7	266.7
IA	Webster County	42.4	265.8
IA	Winnebago County	43.4	266.3
IA	Winneshiek County	43.3	268.2
IA	Woodbury County	42.4	263.8
IA	Worth County	43.4	266.7
IA	Wright County	42.7	266.2
KS	Allen County	37.9	264.7
KS	Anderson County	38.2	264.7
KS	Atchison County	39.5	264.7
KS	Barber County	37.2	261.4

Source: US Census Bureau. Data is provided "as-is". Not responsible for errors.

KS	Barton County	38.4	261.2
KS	Bourbon County	37.9	265.2
KS	Brown County	39.8	264.4
KS	Butler County	37.8	263.1
KS	Chase County	38.3	263.4
KS	Chautauqua County	37.1	263.7
KS	Cherokee County	37.1	265.2
KS	Cheyenne County	39.8	258.3
KS	Clark County	37.2	260.2
KS	Clay County	39.4	262.9
KS	Cloud County	39.5	262.3
KS	Coffey County	38.2	264.3
KS	Comanche County	37.3	260.7
KS	Cowley County	37.2	263.1
KS	Crawford County	37.5	265.2
KS	Decatur County	39.8	259.6
KS	Dickinson County	38.8	262.9
KS	Doniphan County	39.8	264.9
KS	Douglas County	38.9	264.7
KS	Edwards County	37.9	260.7
KS	Elk County	37.4	263.8
KS	Ellis County	38.9	260.7
KS	Ellsworth County	38.7	261.8
KS	Finney County	38.0	259.2
KS	Ford County	37.7	260.1
KS	Franklin County	38.6	264.7
KS	Geary County	39.0	263.2
KS	Gove County	39.0	259.5
KS	Graham County	39.3	260.1
KS	Grant County	37.6	258.7
KS	Gray County	37.7	259.6
KS	Greeley County	38.5	258.2
KS	Greenwood County	37.9	263.8
KS	Hamilton County	38.0	258.2
KS	Harper County	37.2	261.9
KS	Harvey County	38.0	262.6
KS	Haskell County	37.5	259.1
KS	Hodgeman County	38.1	260.1
KS	Jackson County	39.4	264.2
KS	Jefferson County	39.2	264.6
KS	Jewell County	39.8	261.8
KS	Johnson County	38.9	265.2
KS	Kearny County	38.0	258.7
KS	Kingman County	37.6	261.9
KS	Kiowa County	37.6	260.7
KS	Labette County	37.2	264.7
KS	Lane County	38.5	259.5
KS	Leavenworth County	39.2	265.0
KS	Lincoln County	39.0	261.8
KS	Linn County	38.2	265.2
KS	Logan County	39.0	258.9
KS	Lyon County	38.4	263.9
KS	McPherson County	38.4	262.4
KS	Marion County	38.3	262.9
KS	Marshall County	39.8	263.5
KS	Meade County	37.3	259.6
KS	Miami County	38.6	265.1
KS	Mitchell County	39.4	261.8
KS	Montgomery County	37.1	264.3
KS	Morris County	38.7	263.4
KS	Morton County	37.1	258.2
KS	Nemaha County	39.8	264.0
KS	Neosho County	37.6	264.6
KS	Ness County	38.5	260.1
KS	Norton County	39.8	260.1
KS	Osage County	38.6	264.3
KS	Osborne County	39.4	261.2
KS	Ottawa County	39.1	262.3
KS	Pawnee County	38.2	260.8
KS	Phillips County	39.8	260.7
KS	Pottawatomie County	39.3	263.7
KS	Pratt County	37.6	261.3
KS	Rawlins County	39.8	258.9
KS	Reno County	38.0	262.0
KS	Republic County	39.8	262.4
KS	Rice County	38.3	261.8
KS	Riley County	39.3	263.3
KS	Rooks County	39.4	260.7
KS	Rush County	38.5	260.7
KS	Russell County	38.9	261.2
KS	Saline County	38.8	262.4
KS	Scott County	38.5	259.1
KS	Sedgwick County	37.7	262.6
KS	Seward County	37.1	259.1
KS	Shawnee County	39.0	264.3
KS	Sheridan County	39.4	259.5
KS	Sherman County	39.3	258.3
KS	Smith County	39.8	261.2
KS	Stafford County	38.0	261.3
KS	Stanton County	37.6	258.3
KS	Stevens County	37.2	258.7
KS	Sumner County	37.3	262.6
KS	Thomas County	39.4	259.0
KS	Trego County	38.9	260.2
KS	Wabaunsee County	39.0	263.8
KS	Wallace County	38.9	258.2
KS	Washington County	39.8	262.9
KS	Wichita County	38.5	258.6
KS	Wilson County	37.5	264.2
KS	Woodson County	37.9	264.3
KS	Wyandotte County	39.1	265.3
KY	Adair County	37.1	274.7
KY	Allen County	36.7	273.8
KY	Anderson County	38.0	275.0
KY	Ballard County	37.1	271.0
KY	Barren County	37.0	274.1
KY	Bath County	38.1	276.2
KY	Bell County	36.7	276.3
KY	Boone County	39.0	275.3
KY	Bourbon County	38.2	275.8
KY	Boyd County	38.4	277.3
KY	Boyle County	37.6	275.2
KY	Bracken County	38.7	275.9
KY	Breathitt County	37.5	276.7
KY	Breckinridge County	37.8	273.5
KY	Bullitt County	38.0	274.3
KY	Butler County	37.2	273.3
KY	Caldwell County	37.2	272.1
KY	Calloway County	36.6	271.7
KY	Campbell County	39.0	275.6
KY	Carlisle County	36.9	271.0
KY	Carroll County	38.7	274.9
KY	Carter County	38.3	277.0
KY	Casey County	37.3	275.1
KY	Christian County	36.9	272.5
KY	Clark County	38.0	275.8
KY	Clay County	37.2	276.3
KY	Clinton County	36.7	274.9
KY	Crittenden County	37.3	271.9
KY	Cumberland County	36.8	274.6
KY	Daviess County	37.8	272.9
KY	Edmonson County	37.2	273.8
KY	Elliott County	38.1	276.9
KY	Estill County	37.7	276.0
KY	Fayette County	38.0	275.5
KY	Fleming County	38.4	276.3
KY	Floyd County	37.6	277.3
KY	Franklin County	38.2	275.1
KY	Fulton County	36.5	270.9
KY	Gallatin County	38.7	275.1
KY	Garrard County	37.6	275.4
KY	Grant County	38.7	275.4
KY	Graves County	36.7	271.4
KY	Grayson County	37.5	273.7
KY	Green County	37.3	274.5
KY	Greenup County	38.6	277.1
KY	Hancock County	37.9	273.2
KY	Hardin County	37.7	274.1
KY	Harlan County	36.9	276.8
KY	Harrison County	38.4	275.7
KY	Hart County	37.3	274.1
KY	Henderson County	37.8	272.4
KY	Henry County	38.4	274.8
KY	Hickman County	36.7	271.0
KY	Hopkins County	37.3	272.5
KY	Jackson County	37.4	276.0
KY	Jefferson County	38.2	274.3
KY	Jessamine County	37.9	275.4
KY	Johnson County	37.8	277.2
KY	Kenton County	39.0	275.5
KY	Knott County	37.3	277.0
KY	Knox County	36.9	276.1
KY	Larue County	37.5	274.3
KY	Laurel County	37.1	275.9
KY	Lawrence County	38.1	277.3
KY	Lee County	37.6	276.3
KY	Leslie County	37.1	276.6
KY	Letcher County	37.1	277.2
KY	Lewis County	38.5	276.7
KY	Lincoln County	37.5	275.3
KY	Livingston County	37.2	271.7
KY	Logan County	36.9	273.1
KY	Lyon County	37.0	271.9
KY	McCracken County	37.1	271.3
KY	McCreary County	36.7	275.5
KY	McLean County	37.5	272.8
KY	Madison County	37.7	275.7
KY	Magoffin County	37.7	276.9
KY	Marion County	37.6	274.7
KY	Marshall County	36.9	271.7

Source: US Census Bureau. Data is provided "as-is". Not responsible for errors.

KY	Martin County	37.8	277.5
KY	Mason County	38.6	276.2
KY	Meade County	37.9	273.9
KY	Menifee County	38.0	276.4
KY	Mercer County	37.8	275.2
KY	Metcalfe County	37.0	274.4
KY	Monroe County	36.7	274.3
KY	Montgomery County	38.0	276.1
KY	Morgan County	37.9	276.7
KY	Muhlenberg County	37.2	272.9
KY	Nelson County	37.8	274.5
KY	Nicholas County	38.3	276.0
KY	Ohio County	37.5	273.1
KY	Oldham County	38.4	274.6
KY	Owen County	38.5	275.2
KY	Owsley County	37.4	276.3
KY	Pendleton County	38.7	275.6
KY	Perry County	37.2	276.8
KY	Pike County	37.4	277.6
KY	Powell County	37.8	276.1
KY	Pulaski County	37.1	275.4
KY	Robertson County	38.5	275.9
KY	Rockcastle County	37.4	275.7
KY	Rowan County	38.2	276.6
KY	Russell County	37.0	274.9
KY	Scott County	38.2	275.4
KY	Shelby County	38.2	274.8
KY	Simpson County	36.7	273.4
KY	Spencer County	38.0	274.7
KY	Taylor County	37.4	274.7
KY	Todd County	36.8	272.8
KY	Trigg County	36.8	272.1
KY	Trimble County	38.6	274.6
KY	Union County	37.6	272.1
KY	Warren County	37.0	273.6
KY	Washington County	37.7	274.8
KY	Wayne County	36.8	275.2
KY	Webster County	37.5	272.3
KY	Whitley County	36.8	275.9
KY	Wolfe County	37.7	276.5
KY	Woodford County	38.1	275.3
LA	Acadia Parish	30.3	267.6
LA	Allen Parish	30.7	267.2
LA	Ascension Parish	30.2	269.1
LA	Assumption Parish	29.9	268.9
LA	Avoyelles Parish	31.1	267.9
LA	Beauregard Parish	30.7	266.7
LA	Bienville Parish	32.4	267.0
LA	Bossier Parish	32.6	266.3
LA	Caddo Parish	32.5	266.2
LA	Calcasieu Parish	30.2	266.7
LA	Caldwell Parish	32.1	267.9
LA	Cameron Parish	29.9	266.8
LA	Catahoula Parish	31.7	268.1
LA	Claiborne Parish	32.8	267.0
LA	Concordia Parish	31.6	268.5
LA	De Soto Parish	32.1	266.2
LA	East Baton Rouge Parish	30.5	268.9
LA	East Carroll Parish	32.8	268.8
LA	East Feliciana Parish	30.8	268.9
LA	Evangeline Parish	30.7	267.6
LA	Franklin Parish	32.1	268.3
LA	Grant Parish	31.6	267.4
LA	Iberia Parish	30.0	268.2
LA	Iberville Parish	30.3	268.7
LA	Jackson Parish	32.3	267.4
LA	Jefferson Parish	29.9	269.8
LA	Jefferson Davis Parish	30.2	267.2
LA	Lafayette Parish	30.2	268.0
LA	Lafourche Parish	29.6	269.4
LA	La Salle Parish	31.7	267.8
LA	Lincoln Parish	32.6	267.3
LA	Livingston Parish	30.5	269.2
LA	Madison Parish	32.4	268.8
LA	Morehouse Parish	32.8	268.1
LA	Natchitoches Parish	31.7	266.9
LA	Orleans Parish	30.0	269.9
LA	Ouachita Parish	32.5	267.9
LA	Plaquemines Parish	29.6	270.2
LA	Pointe Coupee Parish	30.6	268.5
LA	Rapides Parish	31.3	267.5
LA	Red River Parish	32.1	266.7
LA	Richland Parish	32.4	268.3
LA	Sabine Parish	31.6	266.4
LA	St. Bernard Parish	29.9	270.1
LA	St. Charles Parish	29.9	269.6
LA	St. Helena Parish	30.8	269.3
LA	St. James Parish	30.0	269.2
LA	St. John the Baptist Parish	30.1	269.5
LA	St. Landry Parish	30.5	267.9
LA	St. Martin Parish	30.2	268.2
LA	St. Mary Parish	29.7	268.6
LA	St. Tammany Parish	30.4	270.1
LA	Tangipahoa Parish	30.6	269.5
LA	Tensas Parish	32.0	268.7
LA	Terrebonne Parish	29.5	269.3
LA	Union Parish	32.8	267.6
LA	Vermilion Parish	30.0	267.8
LA	Vernon Parish	31.1	266.8
LA	Washington Parish	30.8	270.0
LA	Webster Parish	32.7	266.7
LA	West Baton Rouge Parish	30.5	268.7
LA	West Carroll Parish	32.8	268.6
LA	West Feliciana Parish	30.9	268.6
LA	Winn Parish	31.9	267.4
ME	Androscoggin County	44.1	289.8
ME	Aroostook County	46.6	291.7
ME	Cumberland County	43.8	289.7
ME	Franklin County	44.9	289.6
ME	Hancock County	44.5	291.6
ME	Kennebec County	44.4	290.2
ME	Knox County	44.1	290.9
ME	Lincoln County	44.0	290.5
ME	Oxford County	44.3	289.3
ME	Penobscot County	45.2	291.3
ME	Piscataquis County	45.6	290.7
ME	Sagadahoc County	43.9	290.1
ME	Somerset County	45.1	290.1
ME	Waldo County	44.5	290.9
ME	Washington County	44.9	292.4
ME	York County	43.4	289.3
MD	Allegany County	39.6	281.2
MD	Anne Arundel County	39.1	283.4
MD	Baltimore County	39.4	283.4
MD	Calvert County	38.5	283.5
MD	Caroline County	38.9	284.2
MD	Carroll County	39.6	283.0
MD	Cecil County	39.6	284.0
MD	Charles County	38.5	283.0
MD	Dorchester County	38.5	284.0
MD	Frederick County	39.5	282.6
MD	Garrett County	39.5	280.7
MD	Harford County	39.5	283.7
MD	Howard County	39.2	283.1
MD	Kent County	39.3	283.9
MD	Montgomery County	39.1	282.9
MD	Prince George's County	38.9	283.1
MD	Queen Anne's County	39.0	283.9
MD	St. Mary's County	38.3	283.4
MD	Somerset County	38.1	284.2
MD	Talbot County	38.8	283.9
MD	Washington County	39.6	282.2
MD	Wicomico County	38.4	284.4
MD	Worcester County	38.3	284.7
MD	Baltimore city	39.3	283.4
MA	Barnstable County	41.7	289.7
MA	Berkshire County	42.4	286.8
MA	Bristol County	41.8	288.9
MA	Dukes County	41.4	289.4
MA	Essex County	42.6	289.0
MA	Franklin County	42.6	287.4
MA	Hampden County	42.1	287.4
MA	Hampshire County	42.3	287.4
MA	Middlesex County	42.5	288.7
MA	Nantucket County	41.3	289.9
MA	Norfolk County	42.2	288.8
MA	Plymouth County	42.0	289.2
MA	Suffolk County	42.3	288.9
MA	Worcester County	42.3	288.2
MI	Alcona County	44.7	276.4
MI	Alger County	46.4	273.4
MI	Allegan County	42.6	274.1
MI	Alpena County	45.0	276.5
MI	Antrim County	45.0	274.8
MI	Arenac County	44.1	276.1
MI	Baraga County	46.7	271.6
MI	Barry County	42.6	274.7
MI	Bay County	43.6	276.1
MI	Benzie County	44.6	274.0
MI	Berrien County	42.0	273.6
MI	Branch County	41.9	274.9
MI	Calhoun County	42.3	274.9
MI	Cass County	41.9	274.0
MI	Charlevoix County	45.2	274.9
MI	Cheboygan County	45.5	275.5
MI	Chippewa County	46.3	275.5
MI	Clare County	44.0	275.1
MI	Clinton County	42.9	275.4
MI	Crawford County	44.7	275.4
MI	Delta County	45.9	273.1

Source: US Census Bureau. Data is provided "as-is". Not responsible for errors.

MI	Dickinson County	45.9	272
MI	Eaton County	42.6	275.2
MI	Emmet County	45.5	275.1
MI	Genesee County	43.0	276.3
MI	Gladwin County	44.0	275.6
MI	Gogebic County	46.4	270.2
MI	Grand Traverse County	44.7	274.4
MI	Gratiot County	43.3	275.4
MI	Hillsdale County	41.9	275.4
MI	Houghton County	47.0	271.4
MI	Huron County	43.8	276.9
MI	Ingham County	42.7	275.5
MI	Ionia County	43.0	274.9
MI	Iosco County	44.4	276.4
MI	Iron County	46.2	271.4
MI	Isabella County	43.6	275.2
MI	Jackson County	42.2	275.6
MI	Kalamazoo County	42.3	274.4
MI	Kalkaska County	44.7	274.9
MI	Kent County	43.0	274.4
MI	Keweenaw County	47.4	271.8
MI	Lake County	44.0	274.2
MI	Lapeer County	43.1	276.8
MI	Leelanau County	44.9	274.2
MI	Lenawee County	41.9	275.9
MI	Livingston County	42.6	276.1
MI	Luce County	46.5	274.4
MI	Mackinac County	46.0	275.0
MI	Macomb County	42.6	277.0
MI	Manistee County	44.3	273.9
MI	Marquette County	46.5	272.4
MI	Mason County	44.0	273.7
MI	Mecosta County	43.6	274.6
MI	Menominee County	45.5	272.4
MI	Midland County	43.6	275.7
MI	Missaukee County	44.3	274.9
MI	Monroe County	41.9	276.5
MI	Montcalm County	43.3	274.8
MI	Montmorency County	45.0	275.9
MI	Muskegon County	43.3	273.8
MI	Newaygo County	43.5	274.2
MI	Oakland County	42.6	276.7
MI	Oceana County	43.6	273.7
MI	Ogemaw County	44.3	275.9
MI	Ontonagon County	46.7	270.7
MI	Osceola County	44.0	274.7
MI	Oscoda County	44.7	275.8
MI	Otsego County	45.0	275.4
MI	Ottawa County	42.9	274.0
MI	Presque Isle County	45.4	276.1
MI	Roscommon County	44.4	275.3
MI	Saginaw County	43.4	276.0
MI	St. Clair County	42.9	277.4
MI	St. Joseph County	41.9	274.5
MI	Sanilac County	43.4	277.2
MI	Schoolcraft County	46.1	273.8
MI	Shiawassee County	42.9	275.9
MI	Tuscola County	43.5	276.6
MI	Van Buren County	42.3	274.0
MI	Washtenaw County	42.3	276.2
MI	Wayne County	42.3	276.8
MI	Wexford County	44.3	274.4
MN	Aitkin County	46.6	266.5
MN	Anoka County	45.2	266.7
MN	Becker County	46.9	264.3
MN	Beltrami County	47.7	265.2
MN	Benton County	45.7	265.9
MN	Big Stone County	45.4	263.6
MN	Blue Earth County	44.1	266.0
MN	Brown County	44.3	265.3
MN	Carlton County	46.6	267.4
MN	Carver County	44.8	266.3
MN	Cass County	46.9	265.6
MN	Chippewa County	45.0	264.4
MN	Chisago County	45.5	267.1
MN	Clay County	46.9	263.4
MN	Clearwater County	47.5	264.6
MN	Cook County	47.9	269.5
MN	Cottonwood County	44.0	264.8
MN	Crow Wing County	46.5	265.9
MN	Dakota County	44.8	266.9
MN	Dodge County	44.0	267.2
MN	Douglas County	45.9	264.6
MN	Faribault County	43.7	266.0
MN	Fillmore County	43.7	267.9
	Freeborn County	43.7	266.6
	Goodhue County	44.4	267.3
	Grant County	45.9	264.0
MN	Hennepin County	45.0	266.6
MN	Houston County	43.7	268.5
MN	Hubbard County	47.1	265.1
MN	Isanti County	45.6	266.7
MN	Itasca County	47.4	266.4
MN	Jackson County	43.7	264.9
MN	Kanabec County	45.9	266.7
MN	Kandiyohi County	45.2	265.0
MN	Kittson County	48.8	263.1
MN	Koochiching County	48.4	266.3
MN	Lac qui Parle County	45.0	263.8
MN	Lake County	47.5	268.5
MN	Lake of the Woods County	48.7	265.2
MN	Le Sueur County	44.4	266.3
MN	Lincoln County	44.4	263.7
MN	Lyon County	44.4	264.2
MN	McLeod County	44.8	265.7
MN	Mahnomen County	47.3	264.2
MN	Marshall County	48.3	263.5
MN	Martin County	43.7	265.5
MN	Meeker County	45.1	265.5
MN	Mille Lacs County	45.9	266.4
MN	Morrison County	46.0	265.7
MN	Mower County	43.7	267.2
MN	Murray County	44.0	264.3
MN	Nicollet County	44.3	265.9
MN	Nobles County	43.7	264.3
MN	Norman County	47.3	263.5
MN	Olmsted County	44.0	267.6
MN	Otter Tail County	46.4	264.3
MN	Pennington County	48.1	263.9
MN	Pine County	46.1	267.2
MN	Pipestone County	44.0	263.7
MN	Polk County	47.8	263.6
MN	Pope County	45.6	264.6
MN	Ramsey County	45.0	266.9
MN	Red Lake County	47.9	263.9
MN	Redwood County	44.4	264.8
MN	Renville County	44.7	265.1
MN	Rice County	44.3	266.7
MN	Rock County	43.7	263.8
MN	Roseau County	48.8	264.2
MN	St. Louis County	47.4	267.6
MN	Scott County	44.7	266.5
MN	Sherburne County	45.4	266.2
MN	Sibley County	44.6	265.8
MN	Stearns County	45.5	265.5
MN	Steele County	44.0	266.8
MN	Stevens County	45.6	264.0
MN	Swift County	45.3	264.3
MN	Todd County	46.1	265.1
MN	Traverse County	45.8	263.5
MN	Wabasha County	44.3	267.8
MN	Wadena County	46.5	265.0
MN	Waseca County	44.0	266.4
MN	Washington County	45.0	267.1
MN	Watonwan County	44.0	265.4
MN	Wilkin County	46.3	263.5
MN	Winona County	44.0	268.3
MN	Wright County	45.2	266.1
MN	Yellow Medicine County	44.7	264.2
MS	Adams County	31.5	268.6
MS	Alcorn County	34.9	271.5
MS	Amite County	31.2	269.2
MS	Attala County	33.1	270.4
MS	Benton County	34.8	270.8
MS	Bolivar County	33.8	269.2
MS	Calhoun County	33.9	270.7
MS	Carroll County	33.5	270.1
MS	Chickasaw County	33.9	271.1
MS	Choctaw County	33.3	270.7
MS	Claiborne County	32.0	269.1
MS	Clarke County	32.1	271.3
MS	Clay County	33.6	271.3
MS	Coahoma County	34.2	269.4
MS	Copiah County	31.9	269.6
MS	Covington County	31.6	270.5
MS	DeSoto County	34.9	270.0
MS	Forrest County	31.3	270.7
MS	Franklin County	31.5	269.1
MS	George County	30.9	271.4
MS	Greene County	31.2	271.4
MS	Grenada County	33.8	270.2
MS	Hancock County	30.4	270.5
MS	Harrison County	30.4	270.9
MS	Hinds County	32.3	269.7
MS	Holmes County	33.1	269.9
MS	Humphreys County	33.1	269.5
MS	Issaquena County	32.8	269.0
MS	Itawamba County	34.3	271.6
MS	Jackson County	30.5	271.4
MS	Jasper County	32.0	270.9

Source: US Census Bureau. Data is provided "as-is". Not responsible for errors.

MS	Jefferson County	31.7	269.0
MS	Jefferson Davis County	31.6	270.2
MS	Jones County	31.7	270.8
MS	Kemper County	32.8	271.3
MS	Lafayette County	34.4	270.5
MS	Lamar County	31.2	270.5
MS	Lauderdale County	32.4	271.3
MS	Lawrence County	31.6	269.9
MS	Leake County	32.7	270.5
MS	Lee County	34.3	271.3
MS	Leflore County	33.6	269.7
MS	Lincoln County	31.5	269.6
MS	Lowndes County	33.5	271.6
MS	Madison County	32.6	269.9
MS	Marion County	31.2	270.2
MS	Marshall County	34.8	270.5
MS	Monroe County	33.9	271.5
MS	Montgomery County	33.5	270.3
MS	Neshoba County	32.7	270.9
MS	Newton County	32.4	270.9
MS	Noxubee County	33.1	271.4
MS	Oktibbeha County	33.4	271.1
MS	Panola County	34.4	270.0
MS	Pearl River County	30.7	270.4
MS	Perry County	31.2	271.0
MS	Pike County	31.2	269.6
MS	Pontotoc County	34.2	271.0
MS	Prentiss County	34.6	271.5
MS	Quitman County	34.3	269.7
MS	Rankin County	32.3	270.0
MS	Scott County	32.4	270.5
MS	Sharkey County	32.9	269.2
MS	Simpson County	31.9	270.1
MS	Smith County	32.0	270.5
MS	Stone County	30.8	270.9
MS	Sunflower County	33.6	269.4
MS	Tallahatchie County	33.9	269.8
MS	Tate County	34.6	270.0
MS	Tippah County	34.8	271.1
MS	Tishomingo County	34.7	271.8
MS	Tunica County	34.7	269.6
MS	Union County	34.5	271.0
MS	Walthall County	31.1	269.9
MS	Warren County	32.3	269.1
MS	Washington County	33.4	269.0
MS	Wayne County	31.6	271.3
MS	Webster County	33.6	270.8
MS	Wilkinson County	31.2	268.7
MS	Winston County	33.1	270.9
MS	Yalobusha County	34.1	270.3
MS	Yazoo County	32.8	269.6
MO	Adair County	40.2	267.4
MO	Andrew County	40.0	265.2
MO	Atchison County	40.4	264.6
MO	Audrain County	39.2	268.2
MO	Barry County	36.7	266.2
MO	Barton County	37.5	265.7
MO	Bates County	38.2	265.6
MO	Benton County	38.3	266.7
MO	Bollinger County	37.3	270.0
MO	Boone County	39.0	267.7
MO	Buchanan County	39.7	265.2
MO	Butler County	36.7	269.6
MO	Caldwell County	39.7	266.0
MO	Callaway County	38.8	268.1
MO	Camden County	38.1	267.2
MO	Cape Girardeau County	37.4	270.4
MO	Carroll County	39.4	266.5
MO	Carter County	36.9	269.1
MO	Cass County	38.7	265.6
MO	Cedar County	37.7	266.1
MO	Chariton County	39.5	267.0
MO	Christian County	37.0	266.8
MO	Clark County	40.4	268.3
MO	Clay County	39.3	265.5
MO	Clinton County	39.6	265.6
MO	Cole County	38.5	267.8
MO	Cooper County	38.9	267.2
MO	Crawford County	38.0	268.7
MO	Dade County	37.4	266.2
MO	Dallas County	37.7	267.0
MO	Daviess County	40.0	266.0
MO	DeKalb County	39.9	265.6
MO	Dent County	37.6	268.5
MO	Douglas County	36.9	267.5
MO	Dunklin County	36.3	269.9
MO	Franklin County	38.4	269.0
MO	Gasconade County	38.4	268.5
MO	Gentry County	40.2	265.6
MO	Greene County	37.2	266.7
MO	Grundy County	40.1	266.4
MO	Harrison County	40.3	266.0
MO	Henry County	38.4	266.2
MO	Hickory County	37.9	266.7
MO	Holt County	40.1	264.8
MO	Howard County	39.1	267.3
MO	Howell County	36.8	268.1
MO	Iron County	37.5	269.3
MO	Jackson County	39.0	265.5
MO	Jasper County	37.1	265.6
MO	Jefferson County	38.3	269.5
MO	Johnson County	38.7	266.2
MO	Knox County	40.1	267.9
MO	Laclede County	37.7	267.4
MO	Lafayette County	39.1	266.2
MO	Lawrence County	37.1	266.2
MO	Lewis County	40.1	268.3
MO	Lincoln County	39.0	269.1
MO	Linn County	39.8	266.9
MO	Livingston County	39.8	266.4
MO	McDonald County	36.6	265.6
MO	Macon County	39.8	267.4
MO	Madison County	37.5	269.7
MO	Maries County	38.1	268.1
MO	Marion County	39.8	268.5
MO	Mercer County	40.4	266.4
MO	Miller County	38.2	267.5
MO	Mississippi County	36.8	270.7
MO	Moniteau County	38.6	267.4
MO	Monroe County	39.5	268.0
MO	Montgomery County	38.9	268.5
MO	Morgan County	38.4	267.2
MO	New Madrid County	36.6	270.3
MO	Newton County	36.9	265.6
MO	Nodaway County	40.4	265.1
MO	Oregon County	36.6	268.6
MO	Osage County	38.5	268.1
MO	Ozark County	36.6	267.5
MO	Pemiscot County	36.2	270.2
MO	Perry County	37.7	270.2
MO	Pettis County	38.7	266.7
MO	Phelps County	37.9	268.2
MO	Pike County	39.4	268.9
MO	Platte County	39.3	265.3
MO	Polk County	37.6	266.6
MO	Pulaski County	37.8	267.8
MO	Putnam County	40.5	267.0
MO	Ralls County	39.5	268.5
MO	Randolph County	39.4	267.5
MO	Ray County	39.3	266.0
MO	Reynolds County	37.4	269.0
MO	Ripley County	36.6	269.2
MO	St. Charles County	38.8	269.3
MO	St. Clair County	38.1	266.2
MO	Ste. Genevieve County	37.9	269.8
MO	St. Francois County	37.8	269.5
MO	St. Louis County	38.7	269.6
MO	Saline County	39.1	266.8
MO	Schuyler County	40.5	267.5
MO	Scotland County	40.4	267.9
MO	Scott County	37.0	270.4
MO	Shannon County	37.1	268.6
MO	Shelby County	39.8	267.9
MO	Stoddard County	36.8	270.0
MO	Stone County	36.7	266.5
MO	Sullivan County	40.2	266.9
MO	Taney County	36.7	266.8
MO	Texas County	37.3	268.0
MO	Vernon County	37.8	265.7
MO	Warren County	38.8	268.9
MO	Washington County	38.0	269.2
MO	Wayne County	37.1	269.5
MO	Webster County	37.3	267.1
MO	Worth County	40.5	265.6
MO	Wright County	37.2	267.5
MO	St. Louis city	38.6	269.8
MT	Beaverhead County	45.2	247.1
MT	Big Horn County	45.5	252.5
MT	Blaine County	48.5	251.0
MT	Broadwater County	46.3	248.5
MT	Carbon County	45.3	250.9
MT	Carter County	45.6	255.5
MT	Cascade County	47.4	248.7
MT	Chouteau County	47.9	249.6
MT	Custer County	46.3	254.2
MT	Daniels County	48.8	254.6
MT	Dawson County	47.2	255.2
MT	Deer Lodge County	46.1	247.0
MT	Fallon County	46.4	255.6
MT	Fergus County	47.1	250.6

Source: US Census Bureau. Data is provided "as-is". Not responsible for errors.

MT	Flathead County	48.3	245.7
MT	Gallatin County	45.7	248.8
MT	Garfield County	47.2	253.0
MT	Glacier County	48.6	247.2
MT	Golden Valley County	46.4	250.9
MT	Granite County	46.4	246.6
MT	Hill County	48.6	250.0
MT	Jefferson County	46.1	247.9
MT	Judith Basin County	47.0	249.8
MT	Lake County	47.7	245.9
MT	Lewis and Clark County	46.8	247.8
MT	Liberty County	48.6	249.0
MT	Lincoln County	48.6	244.6
MT	McCone County	47.6	254.3
MT	Madison County	45.4	248.1
MT	Meagher County	46.6	249.1
MT	Mineral County	47.1	245.0
MT	Missoula County	46.9	246.0
MT	Musselshell County	46.6	251.6
MT	Park County	45.7	249.5
MT	Petroleum County	47.0	251.7
MT	Phillips County	48.4	252.2
MT	Pondera County	48.2	247.8
MT	Powder River County	45.4	254.4
MT	Powell County	46.6	247.2
MT	Prairie County	46.9	254.6
MT	Ravalli County	46.2	245.9
MT	Richland County	47.8	255.5
MT	Roosevelt County	48.2	255.0
MT	Rosebud County	46.0	253.3
MT	Sanders County	47.6	244.9
MT	Sheridan County	48.7	255.5
MT	Silver Bow County	46.0	247.4
MT	Stillwater County	45.6	250.6
MT	Sweet Grass County	45.9	250.1
MT	Teton County	47.8	247.8
MT	Toole County	48.6	248.2
MT	Treasure County	46.3	252.7
MT	Valley County	48.3	253.4
MT	Wheatland County	46.4	250.1
MT	Wibaux County	47.0	255.8
MT	Yellowstone County	45.8	251.5
NE	Adams County	40.6	261.5
NE	Antelope County	42.2	261.9
NE	Arthur County	41.6	258.3
NE	Banner County	41.5	256.3
NE	Blaine County	41.9	260.0
NE	Boone County	41.7	262.0
NE	Box Butte County	42.2	257.1
NE	Boyd County	42.9	261.3
NE	Brown County	42.5	260.1
NE	Buffalo County	40.8	260.9
NE	Burt County	41.9	263.7
NE	Butler County	41.2	262.9
NE	Cass County	40.9	263.9
NE	Cedar County	42.6	262.8
NE	Chase County	40.5	258.3
NE	Cherry County	42.7	258.9
NE	Cheyenne County	41.2	257.0
NE	Clay County	40.5	262.0
NE	Colfax County	41.6	262.9
NE	Cuming County	41.9	263.2
NE	Custer County	41.4	260.4
NE	Dakota County	42.4	263.5
NE	Dawes County	42.7	256.8
NE	Dawson County	40.8	260.1
NE	Deuel County	41.1	257.7
NE	Dixon County	42.5	263.2
NE	Dodge County	41.5	263.4
NE	Douglas County	41.3	263.9
NE	Dundy County	40.1	258.4
NE	Fillmore County	40.5	262.4
NE	Franklin County	40.2	261.1
NE	Frontier County	40.5	259.6
NE	Furnas County	40.2	260.1
NE	Gage County	40.2	263.3
NE	Garden County	41.5	257.7
NE	Garfield County	41.8	261.0
NE	Gosper County	40.6	260.2
NE	Grant County	41.9	258.3
NE	Greeley County	41.6	261.5
NE	Hall County	40.9	261.6
NE	Hamilton County	40.9	262.0
NE	Harlan County	40.2	260.6
NE	Hayes County	40.5	258.9
NE	Hitchcock County	40.2	259.0
NE	Holt County	42.5	261.3
NE	Hooker County	42.0	258.9
NE	Howard County	41.2	261.5
NE	Jefferson County	40.2	262.9
NE	Johnson County	40.4	263.7
NE	Kearney County	40.5	261.0
NE	Keith County	41.2	258.3
NE	Keya Paha County	42.9	260.3
NE	Kimball County	41.2	256.3
NE	Knox County	42.6	262.1
NE	Lancaster County	40.8	263.3
NE	Lincoln County	41.1	259.2
NE	Logan County	41.5	259.5
NE	Loup County	41.9	260.6
NE	McPherson County	41.6	259.0
NE	Madison County	42.0	262.5
NE	Merrick County	41.2	262.0
NE	Morrill County	41.7	256.9
NE	Nance County	41.4	262.1
NE	Nemaha County	40.4	264.2
NE	Nuckolls County	40.2	262.0
NE	Otoe County	40.7	263.9
NE	Pawnee County	40.1	263.8
NE	Perkins County	40.8	258.4
NE	Phelps County	40.5	260.6
NE	Pierce County	42.3	262.4
NE	Platte County	41.5	262.5
NE	Polk County	41.2	262.4
NE	Red Willow County	40.2	259.5
NE	Richardson County	40.1	264.3
NE	Rock County	42.5	260.5
NE	Saline County	40.5	262.9
NE	Sarpy County	41.1	264.0
NE	Saunders County	41.2	263.4
NE	Scotts Bluff County	41.9	256.3
NE	Seward County	40.9	262.9
NE	Sheridan County	42.6	257.6
NE	Sherman County	41.2	261.0
NE	Sioux County	42.4	256.2
NE	Stanton County	41.9	262.8
NE	Thayer County	40.2	262.4
NE	Thomas County	42.0	259.4
NE	Thurston County	42.2	263.4
NE	Valley County	41.5	261.0
NE	Washington County	41.5	263.8
NE	Wayne County	42.2	262.9
NE	Webster County	40.2	261.5
NE	Wheeler County	41.9	261.5
NE	York County	40.9	262.4
NV	Churchill County	39.5	241.3
NV	Clark County	36.1	244.9
NV	Douglas County	39.0	240.3
NV	Elko County	41.0	244.6
NV	Esmeralda County	37.8	242.4
NV	Eureka County	40.0	243.7
NV	Humboldt County	41.3	242.2
NV	Lander County	40.0	243.0
NV	Lincoln County	37.8	245.3
NV	Lyon County	39.2	240.7
NV	Mineral County	38.5	241.5
NV	Nye County	37.9	243.4
NV	Pershing County	40.4	241.7
NV	Storey County	39.4	240.4
NV	Washoe County	39.7	240.2
NV	White Pine County	39.3	245.1
NV	Carson City	39.2	240.2
NH	Belknap County	43.5	288.6
NH	Carroll County	43.8	288.8
NH	Cheshire County	42.9	287.8
NH	Coos County	44.6	288.7
NH	Grafton County	43.9	288.1
NH	Hillsborough County	42.9	288.4
NH	Merrimack County	43.3	288.4
NH	Rockingham County	43.0	288.9
NH	Strafford County	43.3	289.0
NH	Sullivan County	43.3	287.8
NJ	Atlantic County	39.4	285.4
NJ	Bergen County	40.9	285.9
NJ	Burlington County	40.0	285.2
NJ	Camden County	39.9	285.0
NJ	Cape May County	39.1	285.2
NJ	Cumberland County	39.4	284.9
NJ	Essex County	40.8	285.8
NJ	Gloucester County	39.8	284.9
NJ	Hudson County	40.7	285.9
NJ	Hunterdon County	40.6	285.1
NJ	Mercer County	40.3	285.3
NJ	Middlesex County	40.5	285.6
NJ	Monmouth County	40.3	285.9
NJ	Morris County	40.9	285.5
NJ	Ocean County	39.9	285.8
NJ	Passaic County	40.9	285.8
NJ	Salem County	39.6	284.6
NJ	Somerset County	40.6	285.4

Source: US Census Bureau. Data is provided "as-is". Not responsible for errors.

NJ	Sussex County	41.1	285.3
NJ	Union County	40.7	285.7
NJ	Warren County	40.8	285.0
NM	Bernalillo County	35.1	253.4
NM	Catron County	34.0	251.6
NM	Chaves County	33.4	255.6
NM	Cibola County	35.0	252.0
NM	Colfax County	36.6	255.3
NM	Curry County	34.5	256.7
NM	De Baca County	34.4	255.8
NM	Dona Ana County	32.3	253.2
NM	Eddy County	32.5	255.7
NM	Grant County	32.7	251.8
NM	Guadalupe County	34.9	255.2
NM	Harding County	35.9	256.1
NM	Hidalgo County	32.0	251.3
NM	Lea County	32.7	256.7
NM	Lincoln County	33.6	254.5
NM	Los Alamos County	35.9	253.7
NM	Luna County	32.2	252.3
NM	McKinley County	35.6	251.6
NM	Mora County	36.0	255.1
NM	Otero County	32.8	254.2
NM	Quay County	35.1	256.4
NM	Rio Arriba County	36.4	253.3
NM	Roosevelt County	34.1	256.6
NM	Sandoval County	35.5	253.2
NM	San Juan County	36.6	251.7
NM	San Miguel County	35.5	254.9
NM	Santa Fe County	35.6	254.0
NM	Sierra County	33.1	252.7
NM	Socorro County	34.2	253.0
NM	Taos County	36.5	254.4
NM	Torrance County	34.8	254.0
NM	Union County	36.5	256.6
NM	Valencia County	34.7	253.2
NY	Albany County	42.7	286.2
NY	Allegany County	42.2	282.0
NY	Bronx County	40.8	286.1
NY	Broome County	42.1	284.1
NY	Cattaraugus County	42.2	281.4
NY	Cayuga County	42.9	283.4
NY	Chautauqua County	42.2	280.7
NY	Chemung County	42.1	283.2
NY	Chenango County	42.5	284.4
NY	Clinton County	44.7	286.4
NY	Columbia County	42.3	286.3
NY	Cortland County	42.6	283.9
NY	Delaware County	42.2	285.0
NY	Dutchess County	41.7	286.2
NY	Erie County	42.9	281.2
NY	Essex County	44.2	286.3
NY	Franklin County	44.6	285.7
NY	Fulton County	43.1	285.6
NY	Genesee County	43.0	281.8
NY	Greene County	42.3	286.0
NY	Hamilton County	43.6	285.5
NY	Herkimer County	43.2	285.0
NY	Jefferson County	44.0	284.1
NY	Kings County	40.6	286.0
NY	Lewis County	43.8	284.5
NY	Livingston County	42.7	282.2
NY	Madison County	42.9	284.3
NY	Monroe County	43.2	282.4
NY	Montgomery County	42.9	285.6
NY	Nassau County	40.7	286.4
NY	New York County	40.8	286.0
NY	Niagara County	43.1	281.2
NY	Oneida County	43.2	284.6
NY	Onondaga County	43.0	283.8
NY	Ontario County	42.9	282.7
NY	Orange County	41.4	285.7
NY	Orleans County	43.3	281.8
NY	Oswego County	43.4	283.8
NY	Otsego County	42.6	285.0
NY	Putnam County	41.4	286.3
NY	Queens County	40.7	286.2
NY	Rensselaer County	42.7	286.4
NY	Richmond County	40.6	285.9
NY	Rockland County	41.1	286.0
NY	St. Lawrence County	44.6	284.8
NY	Saratoga County	43.0	286.2
NY	Schenectady County	42.8	286.0
NY	Schoharie County	42.6	285.6
NY	Schuyler County	42.4	283.1
NY	Seneca County	42.8	283.2
NY	Steuben County	42.3	282.6
NY	Suffolk County	40.8	287.0
NY	Sullivan County	41.7	285.3
NY	Tioga County	42.1	283.7
NY	Tompkins County	42.5	283.5
NY	Ulster County	41.9	285.9
NY	Warren County	43.5	286.2
NY	Washington County	43.3	286.6
NY	Wayne County	43.1	282.9
NY	Westchester County	41.1	286.2
NY	Wyoming County	42.7	281.8
NY	Yates County	42.6	282.9
NC	Alamance County	36.1	280.6
NC	Alexander County	35.9	278.8
NC	Alleghany County	36.5	278.9
NC	Anson County	35.0	279.9
NC	Ashe County	36.4	278.5
NC	Avery County	36.1	278.1
NC	Beaufort County	35.5	283.1
NC	Bertie County	36.1	283.0
NC	Bladen County	34.6	281.4
NC	Brunswick County	34.0	281.8
NC	Buncombe County	35.6	277.5
NC	Burke County	35.7	278.4
NC	Cabarrus County	35.4	279.4
NC	Caldwell County	35.9	278.5
NC	Camden County	36.4	283.8
NC	Carteret County	34.7	283.2
NC	Caswell County	36.4	280.7
NC	Catawba County	35.7	278.8
NC	Chatham County	35.7	280.7
NC	Cherokee County	35.1	276.0
NC	Chowan County	36.1	283.4
NC	Clay County	35.0	276.2
NC	Cleveland County	35.3	278.5
NC	Columbus County	34.3	281.3
NC	Craven County	35.1	282.9
NC	Cumberland County	35.1	281.1
NC	Currituck County	36.4	284.0
NC	Dare County	35.8	284.3
NC	Davidson County	35.8	279.8
NC	Davie County	35.9	279.5
NC	Duplin County	34.9	282.0
NC	Durham County	36.0	281.1
NC	Edgecombe County	35.9	282.4
NC	Forsyth County	36.1	279.8
NC	Franklin County	36.1	281.7
NC	Gaston County	35.3	278.8
NC	Gates County	36.4	283.3
NC	Graham County	35.4	276.2
NC	Granville County	36.3	281.3
NC	Greene County	35.5	282.3
NC	Guilford County	36.1	280.2
NC	Halifax County	36.3	282.3
NC	Harnett County	35.4	281.2
NC	Haywood County	35.5	277.0
NC	Henderson County	35.3	277.5
NC	Hertford County	36.3	283.0
NC	Hoke County	35.0	280.8
NC	Hyde County	35.5	283.8
NC	Iredell County	35.7	279.1
NC	Jackson County	35.3	276.8
NC	Johnston County	35.5	281.6
NC	Jones County	35.0	282.6
NC	Lee County	35.5	280.8
NC	Lenoir County	35.3	282.4
NC	Lincoln County	35.5	278.8
NC	McDowell County	35.7	278.0
NC	Macon County	35.2	276.6
NC	Madison County	35.8	277.3
NC	Martin County	35.8	282.9
NC	Mecklenburg County	35.2	279.2
NC	Mitchell County	36.0	277.9
NC	Montgomery County	35.3	280.1
NC	Moore County	35.2	280.5
NC	Nash County	36.0	282.1
NC	New Hanover County	34.2	282.1
NC	Northampton County	36.4	282.5
NC	Onslow County	34.7	282.6
NC	Orange County	36.0	280.9
NC	Pamlico County	35.1	283.2
NC	Pasquotank County	36.3	283.8
NC	Pender County	34.5	282.1
NC	Perquimans County	36.2	283.5
NC	Person County	36.4	281.0
NC	Pitt County	35.6	282.6
NC	Polk County	35.3	277.8
NC	Randolph County	35.7	280.2
NC	Richmond County	35.0	280.3
NC	Robeson County	34.7	280.9
NC	Rockingham County	36.4	280.2
NC	Rowan County	35.6	279.5
NC	Rutherford County	35.4	278.1
NC	Sampson County	35.0	281.6

Source: US Census Bureau. Data is provided "as-is". Not responsible for errors.

NC	Scotland County	34.8	280.5
NC	Stanly County	35.3	279.8
NC	Stokes County	36.4	279.7
NC	Surry County	36.4	279.3
NC	Swain County	35.4	276.6
NC	Transylvania County	35.2	277.2
NC	Tyrrell County	35.8	283.8
NC	Union County	35.0	279.4
NC	Vance County	36.3	281.6
NC	Wake County	35.8	281.3
NC	Warren County	36.4	281.9
NC	Washington County	35.9	283.4
NC	Watauga County	36.2	278.3
NC	Wayne County	35.4	282.0
NC	Wilkes County	36.2	278.8
NC	Wilson County	35.7	282.1
NC	Yadkin County	36.2	279.3
NC	Yancey County	35.9	277.7
ND	Adams County	46.1	257.4
ND	Barnes County	46.9	261.9
ND	Benson County	48.1	260.6
ND	Billings County	47.0	256.6
ND	Bottineau County	48.8	259.2
ND	Bowman County	46.1	256.6
ND	Burke County	48.8	257.5
ND	Burleigh County	46.9	259.4
ND	Cass County	46.9	262.9
ND	Cavalier County	48.8	261.5
ND	Dickey County	46.1	261.5
ND	Divide County	48.8	256.5
ND	Dunn County	47.3	257.4
ND	Eddy County	47.7	261.0
ND	Emmons County	46.3	259.8
ND	Foster County	47.5	261.1
ND	Golden Valley County	46.9	256.1
ND	Grand Forks County	47.9	262.7
ND	Grant County	46.4	258.3
ND	Griggs County	47.5	261.8
ND	Hettinger County	46.4	257.5
ND	Kidder County	47.0	260.2
ND	LaMoure County	46.4	261.5
ND	Logan County	46.5	260.5
ND	McHenry County	48.2	259.3
ND	McIntosh County	46.1	260.5
ND	McKenzie County	47.8	256.6
ND	McLean County	47.6	258.8
ND	Mercer County	47.3	258.3
ND	Morton County	46.8	258.7
ND	Mountrail County	48.2	257.7
ND	Nelson County	47.9	261.8
ND	Oliver County	47.1	258.6
ND	Pembina County	48.8	262.5
ND	Pierce County	48.2	260.0
ND	Ramsey County	48.2	261.2
ND	Ransom County	46.5	262.3
ND	Renville County	48.7	258.4
ND	Richland County	46.2	263.1
ND	Rolette County	48.8	260.2
ND	Sargent County	46.1	262.4
ND	Sheridan County	47.6	259.7
ND	Sioux County	46.1	259.1
ND	Slope County	46.4	256.6
ND	Stark County	46.9	257.3
ND	Steele County	47.5	262.3
ND	Stutsman County	47.0	261.1
ND	Towner County	48.7	260.8
ND	Traill County	47.5	262.8
ND	Walsh County	48.4	262.3
ND	Ward County	48.3	258.5
ND	Wells County	47.6	260.3
ND	Williams County	48.3	256.5
OH	Adams County	38.8	276.5
OH	Allen County	40.8	275.9
OH	Ashland County	40.8	277.7
OH	Ashtabula County	41.8	279.2
OH	Athens County	39.4	277.9
OH	Auglaize County	40.5	275.7
OH	Belmont County	40.0	279.1
OH	Brown County	38.9	276.1
OH	Butler County	39.4	275.5
OH	Carroll County	40.6	278.9
OH	Champaign County	40.1	276.2
OH	Clark County	39.9	276.2
OH	Clermont County	39.1	275.8
OH	Clinton County	39.4	276.2
OH	Columbiana County	40.8	279.3
OH	Coshocton County	40.3	278.1
OH	Crawford County	40.8	277.1
OH	Cuyahoga County	41.5	278.3
OH	Darke County	40.1	275.4
OH	Defiance County	41.3	275.5
OH	Delaware County	40.3	277.0
OH	Erie County	41.4	277.4
OH	Fairfield County	39.8	277.4
OH	Fayette County	39.6	276.5
OH	Franklin County	40.0	277.0
OH	Fulton County	41.6	275.9
OH	Gallia County	38.8	277.7
OH	Geauga County	41.5	278.8
OH	Greene County	39.7	276.1
OH	Guernsey County	40.0	278.5
OH	Hamilton County	39.2	275.5
OH	Hancock County	41.0	276.3
OH	Hardin County	40.7	276.4
OH	Harrison County	40.3	278.9
OH	Henry County	41.3	275.9
OH	Highland County	39.2	276.4
OH	Hocking County	39.5	277.6
OH	Holmes County	40.6	278.1
OH	Huron County	41.2	277.4
OH	Jackson County	39.0	277.4
OH	Jefferson County	40.4	279.3
OH	Knox County	40.4	277.6
OH	Lake County	41.7	278.7
OH	Lawrence County	38.5	277.5
OH	Licking County	40.1	277.5
OH	Logan County	40.4	276.2
OH	Lorain County	41.4	277.9
OH	Lucas County	41.6	276.4
OH	Madison County	39.9	276.6
OH	Mahoning County	41.1	279.3
OH	Marion County	40.6	276.9
OH	Medina County	41.1	278.1
OH	Meigs County	39.1	278.0
OH	Mercer County	40.5	275.4
OH	Miami County	40.1	275.8
OH	Monroe County	39.7	278.9
OH	Montgomery County	39.8	275.8
OH	Morgan County	39.6	278.2
OH	Morrow County	40.5	277.2
OH	Muskingum County	40.0	278.0
OH	Noble County	39.8	278.5
OH	Ottawa County	41.5	277.0
OH	Paulding County	41.1	275.4
OH	Perry County	39.7	277.8
OH	Pickaway County	39.6	277.0
OH	Pike County	39.1	277.0
OH	Portage County	41.2	278.7
OH	Preble County	39.7	275.4
OH	Putnam County	41.0	275.9
OH	Richland County	40.8	277.5
OH	Ross County	39.3	277.0
OH	Sandusky County	41.4	276.9
OH	Scioto County	38.8	277.1
OH	Seneca County	41.1	276.8
OH	Shelby County	40.3	275.8
OH	Stark County	40.8	278.6
OH	Summit County	41.1	278.5
OH	Trumbull County	41.2	279.2
OH	Tuscarawas County	40.5	278.5
OH	Union County	40.3	276.6
OH	Van Wert County	40.9	275.4
OH	Vinton County	39.2	277.5
OH	Warren County	39.4	275.8
OH	Washington County	39.4	278.5
OH	Wayne County	40.8	278.1
OH	Williams County	41.5	275.4
OH	Wood County	41.4	276.4
OH	Wyandot County	40.9	276.7
OK	Adair County	35.9	265.4
OK	Alfalfa County	36.7	261.7
OK	Atoka County	34.4	263.9
OK	Beaver County	36.7	259.5
OK	Beckham County	35.3	260.4
OK	Blaine County	35.9	261.6
OK	Bryan County	34.0	263.7
OK	Caddo County	35.1	261.7
OK	Canadian County	35.5	262.1
OK	Carter County	34.2	262.8
OK	Cherokee County	35.9	265.0
OK	Choctaw County	34.0	264.5
OK	Cimarron County	36.8	257.6
OK	Cleveland County	35.2	262.6
OK	Coal County	34.6	263.7
OK	Comanche County	34.6	261.6
OK	Cotton County	34.3	261.6
OK	Craig County	36.7	264.8
OK	Creek County	36.0	263.7
OK	Custer County	35.6	261.1
OK	Delaware County	36.5	265.2

Source: US Census Bureau. Data is provided "as-is". Not responsible for errors.

OK	Dewey County	36.0	261.0
OK	Ellis County	36.3	260.2
OK	Garfield County	36.4	262.2
OK	Garvin County	34.7	262.7
OK	Grady County	35.1	262.1
OK	Grant County	36.8	262.2
OK	Greer County	34.9	260.5
OK	Harmon County	34.7	260.1
OK	Harper County	36.8	260.3
OK	Haskell County	35.2	264.9
OK	Hughes County	35.1	263.7
OK	Jackson County	34.6	260.6
OK	Jefferson County	34.1	262.1
OK	Johnston County	34.3	263.3
OK	Kay County	36.8	262.8
OK	Kingfisher County	35.9	262.1
OK	Kiowa County	34.9	261.0
OK	Latimer County	34.9	264.7
OK	Le Flore County	35.0	265.3
OK	Lincoln County	35.7	263.1
OK	Logan County	35.9	262.6
OK	Love County	33.9	262.8
OK	McClain County	35.0	262.5
OK	McCurtain County	34.1	265.2
OK	McIntosh County	35.4	264.4
OK	Major County	36.3	261.6
OK	Marshall County	34.0	263.3
OK	Mayes County	36.3	264.8
OK	Murray County	34.5	263.0
OK	Muskogee County	35.7	264.6
OK	Noble County	36.4	262.8
OK	Nowata County	36.8	264.4
OK	Okfuskee County	35.4	263.7
OK	Oklahoma County	35.5	262.5
OK	Okmulgee County	35.6	264.0
OK	Osage County	36.6	263.6
OK	Ottawa County	36.9	265.2
OK	Pawnee County	36.3	263.4
OK	Payne County	36.1	263.0
OK	Pittsburg County	34.9	264.3
OK	Pontotoc County	34.8	263.3
OK	Pottawatomie County	35.3	263.1
OK	Pushmataha County	34.4	264.6
OK	Roger Mills County	35.7	260.3
OK	Rogers County	36.3	264.4
OK	Seminole County	35.2	263.4
OK	Sequoyah County	35.5	265.2
OK	Stephens County	34.5	262.1
OK	Texas County	36.7	258.5
OK	Tillman County	34.4	261.1
OK	Tulsa County	36.1	264.1
OK	Wagoner County	36.0	264.5
OK	Washington County	36.7	264.1
OK	Washita County	35.3	261.0
OK	Woods County	36.7	261.2
OK	Woodward County	36.4	260.7
OR	Baker County	44.7	242.2
OR	Benton County	44.5	236.7
OR	Clackamas County	45.3	237.5
OR	Clatsop County	46.0	236.2
OR	Columbia County	45.9	237.0
OR	Coos County	43.2	235.9
OR	Crook County	44.2	239.5
OR	Curry County	42.4	235.7
OR	Deschutes County	44.0	238.7
OR	Douglas County	43.3	236.7
OR	Gilliam County	45.3	239.8
OR	Grant County	44.5	241.1
OR	Harney County	43.5	241.0
OR	Hood River County	45.6	238.4
OR	Jackson County	42.4	237.2
OR	Jefferson County	44.6	238.8
OR	Josephine County	42.4	236.6
OR	Klamath County	42.7	238.3
OR	Lake County	42.7	239.4
OR	Lane County	44.0	236.9
OR	Lincoln County	44.7	236.1
OR	Linn County	44.5	237.3
OR	Malheur County	43.6	242.6
OR	Marion County	44.9	237.2
OR	Morrow County	45.4	240.4
OR	Multnomah County	45.5	237.4
OR	Polk County	44.9	236.6
OR	Sherman County	45.5	239.3
OR	Tillamook County	45.5	236.2
OR	Umatilla County	45.6	241.2
OR	Union County	45.3	242.0
OR	Wallowa County	45.6	242.7
OR	Wasco County	45.3	238.7
OR	Washington County	45.5	237.1
OR	Wheeler County	44.7	240.0
OR	Yamhill County	45.2	236.8
PA	Adams County	39.9	282.8
PA	Allegheny County	40.4	280.0
PA	Armstrong County	40.8	280.5
PA	Beaver County	40.7	279.7
PA	Bedford County	40.0	281.5
PA	Berks County	40.4	284.1
PA	Blair County	40.5	281.6
PA	Bradford County	41.8	283.5
PA	Bucks County	40.3	285.0
PA	Butler County	40.9	280.1
PA	Cambria County	40.4	281.2
PA	Cameron County	41.4	281.8
PA	Carbon County	40.9	284.3
PA	Centre County	40.9	282.2
PA	Chester County	40.0	284.3
PA	Clarion County	41.2	280.6
PA	Clearfield County	41.0	281.5
PA	Clinton County	41.2	282.5
PA	Columbia County	41.0	283.6
PA	Crawford County	41.7	279.9
PA	Cumberland County	40.2	282.9
PA	Dauphin County	40.3	283.2
PA	Delaware County	39.9	284.6
PA	Elk County	41.4	281.3
PA	Erie County	42.1	279.9
PA	Fayette County	40.0	280.3
PA	Forest County	41.5	280.7
PA	Franklin County	39.9	282.3
PA	Fulton County	39.9	281.9
PA	Greene County	39.9	279.8
PA	Huntingdon County	40.4	282.0
PA	Indiana County	40.6	280.9
PA	Jefferson County	41.1	281.0
PA	Juniata County	40.6	282.7
PA	Lackawanna County	41.4	284.4
PA	Lancaster County	40.1	283.7
PA	Lawrence County	41.0	279.7
PA	Lebanon County	40.3	283.6
PA	Lehigh County	40.6	284.5
PA	Luzerne County	41.2	284.1
PA	Lycoming County	41.3	283.0
PA	McKean County	41.8	281.4
PA	Mercer County	41.3	279.7
PA	Mifflin County	40.6	282.4
PA	Monroe County	41.1	284.7
PA	Montgomery County	40.2	284.7
PA	Montour County	41.0	283.4
PA	Northampton County	40.7	284.7
PA	Northumberland County	40.9	283.3
PA	Perry County	40.4	282.8
PA	Philadelphia County	40.0	284.9
PA	Pike County	41.3	285.0
PA	Potter County	41.8	282.1
PA	Schuylkill County	40.7	283.8
PA	Snyder County	40.8	283.0
PA	Somerset County	40.0	281.0
PA	Sullivan County	41.5	283.5
PA	Susquehanna County	41.8	284.2
PA	Tioga County	41.8	282.8
PA	Union County	41.0	283.0
PA	Venango County	41.4	280.2
PA	Warren County	41.8	280.7
PA	Washington County	40.2	279.9
PA	Wayne County	41.6	284.7
PA	Westmoreland County	40.3	280.4
PA	Wyoming County	41.5	284.0
PA	York County	39.9	283.3
RI	Bristol County	41.7	288.7
RI	Kent County	41.7	288.5
RI	Newport County	41.5	288.7
RI	Providence County	41.9	288.5
RI	Washington County	41.5	288.4
SC	Abbeville County	34.2	277.5
SC	Aiken County	33.6	278.3
SC	Allendale County	33.0	278.7
SC	Anderson County	34.5	277.4
SC	Bamberg County	33.2	278.9
SC	Barnwell County	33.3	278.6
SC	Beaufort County	32.4	279.3
SC	Berkeley County	33.1	280.0
SC	Calhoun County	33.7	279.2
SC	Charleston County	32.8	280.0
SC	Cherokee County	35.1	278.4
SC	Chester County	34.7	278.9
SC	Chesterfield County	34.7	279.8
SC	Clarendon County	33.7	279.8
SC	Colleton County	32.9	279.3
SC	Darlington County	34.3	280.0

Source: US Census Bureau. Data is provided "as-is". Not responsible for errors.

SC	Dillon County	34.4	280.6
SC	Dorchester County	33.0	279.7
SC	Edgefield County	33.8	278.1
SC	Fairfield County	34.4	278.9
SC	Florence County	34.1	280.3
SC	Georgetown County	33.4	280.7
SC	Greenville County	34.9	277.6
SC	Greenwood County	34.2	277.9
SC	Hampton County	32.8	278.9
SC	Horry County	33.8	281.1
SC	Jasper County	32.4	279.0
SC	Kershaw County	34.3	279.4
SC	Lancaster County	34.7	279.3
SC	Laurens County	34.5	278.0
SC	Lee County	34.2	279.7
SC	Lexington County	33.9	278.8
SC	McCormick County	33.9	277.7
SC	Marion County	34.2	280.7
SC	Marlboro County	34.6	280.3
SC	Newberry County	34.3	278.4
SC	Oconee County	34.7	277.0
SC	Orangeburg County	33.5	279.2
SC	Pickens County	34.8	277.3
SC	Richland County	34.0	279.0
SC	Saluda County	34.0	278.3
SC	Spartanburg County	35.0	278.0
SC	Sumter County	33.9	279.6
SC	Union County	34.7	278.4
SC	Williamsburg County	33.6	280.3
SC	York County	35.0	278.9
SD	Aurora County	43.7	261.5
SD	Beadle County	44.4	261.7
SD	Bennett County	43.2	258.3
SD	Bon Homme County	43.0	262.1
SD	Brookings County	44.3	263.2
SD	Brown County	45.5	261.6
SD	Brule County	43.8	260.9
SD	Buffalo County	44.0	260.7
SD	Butte County	44.8	256.4
SD	Campbell County	45.8	260.0
SD	Charles Mix County	43.2	261.5
SD	Clark County	44.9	262.3
SD	Clay County	42.9	263.0
SD	Codington County	44.9	262.8
SD	Corson County	45.8	258.9
SD	Custer County	43.7	256.5
SD	Davison County	43.7	261.9
SD	Day County	45.4	262.4
SD	Deuel County	44.7	263.3
SD	Dewey County	45.2	259.0
SD	Douglas County	43.4	261.6
SD	Edmunds County	45.4	260.8
SD	Fall River County	43.3	256.4
SD	Faulk County	45.1	260.9
SD	Grant County	45.2	263.3
SD	Gregory County	43.2	260.8
SD	Haakon County	44.2	258.5
SD	Hamlin County	44.7	262.8
SD	Hand County	44.5	261.0
SD	Hanson County	43.7	262.2
SD	Harding County	45.6	256.5
SD	Hughes County	44.4	259.8
SD	Hutchinson County	43.3	262.3
SD	Hyde County	44.6	260.5
SD	Jackson County	43.8	258.3
SD	Jerauld County	44.1	261.4
SD	Jones County	44.0	259.3
SD	Kingsbury County	44.4	262.5
SD	Lake County	44.0	262.9
SD	Lawrence County	44.4	256.2
SD	Lincoln County	43.3	263.3
SD	Lyman County	43.9	260.2
SD	McCook County	43.7	262.6
SD	McPherson County	45.8	260.7
SD	Marshall County	45.7	262.4
SD	Meade County	44.4	256.9
SD	Mellette County	43.6	259.2
SD	Miner County	44.0	262.4
SD	Minnehaha County	43.6	263.3
SD	Moody County	44.0	263.3
SD	Pennington County	44.0	256.9
SD	Perkins County	45.6	257.6
SD	Potter County	45.0	260.1
SD	Roberts County	45.6	263.1
SD	Sanborn County	44.0	261.9
SD	Shannon County	43.3	257.5
SD	Spink County	44.9	261.6
SD	Stanley County	44.4	259.4
SD	Sully County	44.7	259.9
SD	Todd County	43.2	259.2
SD	Tripp County	43.4	260.1
SD	Turner County	43.3	262.9
SD	Union County	42.8	263.3
SD	Walworth County	45.5	259.9
SD	Yankton County	43.0	262.6
SD	Ziebach County	45.0	258.3
TN	Anderson County	36.1	275.8
TN	Bedford County	35.5	273.6
TN	Benton County	36.1	271.9
TN	Bledsoe County	35.6	274.8
TN	Blount County	35.8	276.0
TN	Bradley County	35.2	275.1
TN	Campbell County	36.4	275.9
TN	Cannon County	35.8	273.9
TN	Carroll County	36.0	271.6
TN	Carter County	36.3	277.8
TN	Cheatham County	36.3	272.9
TN	Chester County	35.4	271.4
TN	Claiborne County	36.5	276.3
TN	Clay County	36.6	274.5
TN	Cocke County	35.9	276.9
TN	Coffee County	35.5	273.9
TN	Crockett County	35.8	270.9
TN	Cumberland County	35.9	275.0
TN	Davidson County	36.2	273.2
TN	Decatur County	35.6	271.9
TN	DeKalb County	36.0	274.1
TN	Dickson County	36.1	272.6
TN	Dyer County	36.1	270.6
TN	Fayette County	35.2	270.6
TN	Fentress County	36.4	275.1
TN	Franklin County	35.2	273.9
TN	Gibson County	36.0	271.1
TN	Giles County	35.2	273.0
TN	Grainger County	36.3	276.5
TN	Greene County	36.2	277.2
TN	Grundy County	35.4	274.3
TN	Hamblen County	36.2	276.7
TN	Hamilton County	35.1	274.8
TN	Hancock County	36.5	276.8
TN	Hardeman County	35.2	271.0
TN	Hardin County	35.2	271.8
TN	Hawkins County	36.4	277.1
TN	Haywood County	35.6	270.7
TN	Henderson County	35.6	271.6
TN	Henry County	36.3	271.7
TN	Hickman County	35.8	272.6
TN	Houston County	36.3	272.3
TN	Humphreys County	36.1	272.2
TN	Jackson County	36.4	274.3
TN	Jefferson County	36.1	276.6
TN	Johnson County	36.4	278.2
TN	Knox County	36.0	276.0
TN	Lake County	36.3	270.5
TN	Lauderdale County	35.8	270.5
TN	Lawrence County	35.2	272.6
TN	Lewis County	35.5	272.5
TN	Lincoln County	35.1	273.4
TN	Loudon County	35.7	275.7
TN	McMinn County	35.4	275.4
TN	McNairy County	35.2	271.4
TN	Macon County	36.5	274.0
TN	Madison County	35.6	271.2
TN	Marion County	35.1	274.4
TN	Marshall County	35.5	273.2
TN	Maury County	35.6	272.9
TN	Meigs County	35.5	275.2
TN	Monroe County	35.5	275.7
TN	Montgomery County	36.5	272.6
TN	Moore County	35.3	273.6
TN	Morgan County	36.1	275.4
TN	Obion County	36.4	270.9
TN	Overton County	36.4	274.7
TN	Perry County	35.6	272.1
TN	Pickett County	36.6	274.9
TN	Polk County	35.1	275.5
TN	Putnam County	36.2	274.5
TN	Rhea County	35.6	275.1
TN	Roane County	35.9	275.5
TN	Robertson County	36.5	273.1
TN	Rutherford County	35.9	273.6
TN	Scott County	36.4	275.5
TN	Sequatchie County	35.4	274.6
TN	Sevier County	35.8	276.5
TN	Shelby County	35.1	270.1
TN	Smith County	36.2	274.0
TN	Stewart County	36.5	272.2
TN	Sullivan County	36.5	277.6
TN	Sumner County	36.4	273.5
TN	Tipton County	35.5	270.3

Source: US Census Bureau. Data is provided "as-is". Not responsible for errors.

TN	Trousdale County	36.4	273.8
TN	Unicoi County	36.1	277.6
TN	Union County	36.3	276.2
TN	Van Buren County	35.7	274.5
TN	Warren County	35.7	274.2
TN	Washington County	36.3	277.6
TN	Wayne County	35.2	272.2
TN	Weakley County	36.3	271.3
TN	White County	35.9	274.5
TN	Williamson County	35.9	273.1
TN	Wilson County	36.2	273.7
TX	Anderson County	31.8	264.4
TX	Andrews County	32.3	257.4
TX	Angelina County	31.3	265.3
TX	Aransas County	28.0	263.0
TX	Archer County	33.7	261.3
TX	Armstrong County	35.0	258.6
TX	Atascosa County	28.9	261.5
TX	Austin County	29.9	263.8
TX	Bailey County	34.1	257.2
TX	Bandera County	29.7	260.9
TX	Bastrop County	30.1	262.7
TX	Baylor County	33.6	260.7
TX	Bee County	28.4	262.3
TX	Bell County	31.1	262.5
TX	Bexar County	29.5	261.5
TX	Blanco County	30.2	261.6
TX	Borden County	32.7	258.6
TX	Bosque County	31.9	262.4
TX	Bowie County	33.4	265.7
TX	Brazoria County	29.2	264.6
TX	Brazos County	30.6	263.7
TX	Brewster County	30.0	256.6
TX	Briscoe County	34.5	258.7
TX	Brooks County	27.1	261.8
TX	Brown County	31.8	261.0
TX	Burleson County	30.4	263.4
TX	Burnet County	30.7	261.8
TX	Caldwell County	29.8	262.3
TX	Calhoun County	28.5	263.4
TX	Callahan County	32.3	260.6
TX	Cameron County	26.1	262.4
TX	Camp County	33.0	265.0
TX	Carson County	35.4	258.7
TX	Cass County	33.1	265.7
TX	Castro County	34.5	257.7
TX	Chambers County	29.8	265.3
TX	Cherokee County	31.9	264.8
TX	Childress County	34.5	259.8
TX	Clay County	33.8	261.8
TX	Cochran County	33.7	257.2
TX	Coke County	31.9	259.5
TX	Coleman County	31.8	260.6
TX	Collin County	33.1	263.4
TX	Collingsworth County	34.9	259.8
TX	Colorado County	29.6	263.5
TX	Comal County	29.8	261.8
TX	Comanche County	32.0	261.4
TX	Concho County	31.3	260.1
TX	Cooke County	33.6	262.8
TX	Coryell County	31.3	262.2
TX	Cottle County	34.1	259.7
TX	Crane County	31.4	257.5
TX	Crockett County	30.7	258.6
TX	Crosby County	33.6	258.7
TX	Culberson County	31.3	255.4
TX	Dallam County	36.2	257.3
TX	Dallas County	32.8	263.2
TX	Dawson County	32.7	258.1
TX	Deaf Smith County	34.9	257.5
TX	Delta County	33.4	264.3
TX	Denton County	33.1	262.9
TX	DeWitt County	29.1	262.7
TX	Dickens County	33.6	259.2
TX	Dimmit County	28.5	260.2
TX	Donley County	35.0	259.2
TX	Duval County	27.7	261.5
TX	Eastland County	32.3	261.2
TX	Ector County	31.9	257.6
TX	Edwards County	30.0	259.8
TX	Ellis County	32.4	263.2
TX	El Paso County	31.8	253.6
TX	Erath County	32.2	261.8
TX	Falls County	31.3	263.0
TX	Fannin County	33.6	263.8
TX	Fayette County	29.9	263.1
TX	Fisher County	32.8	259.6
TX	Floyd County	34.1	258.7
TX	Foard County	34.0	260.2
TX	Fort Bend County	29.6	264.3
TX	Franklin County	33.1	264.8
TX	Freestone County	31.7	263.8
TX	Frio County	28.9	260.9
TX	Gaines County	32.8	257.3
TX	Galveston County	29.4	265.1
TX	Garza County	33.2	258.7
TX	Gillespie County	30.3	261.1
TX	Glasscock County	31.9	258.5
TX	Goliad County	28.7	262.6
TX	Gonzales County	29.5	262.5
TX	Gray County	35.4	259.1
TX	Grayson County	33.7	263.4
TX	Gregg County	32.5	265.2
TX	Grimes County	30.5	264.0
TX	Guadalupe County	29.6	262.0
TX	Hale County	34.1	258.2
TX	Hall County	34.5	259.3
TX	Hamilton County	31.8	261.9
TX	Hansford County	36.3	258.7
TX	Hardeman County	34.3	260.3
TX	Hardin County	30.3	265.7
TX	Harris County	29.8	264.6
TX	Harrison County	32.5	265.6
TX	Hartley County	35.9	257.4
TX	Haskell County	33.2	260.2
TX	Hays County	30.0	262.0
TX	Hemphill County	35.8	259.7
TX	Henderson County	32.2	264.1
TX	Hidalgo County	26.2	261.8
TX	Hill County	32.0	262.8
TX	Hockley County	33.6	257.6
TX	Hood County	32.4	262.2
TX	Hopkins County	33.1	264.4
TX	Houston County	31.3	264.6
TX	Howard County	32.2	258.6
TX	Hudspeth County	31.5	254.6
TX	Hunt County	33.1	263.9
TX	Hutchinson County	35.7	258.6
TX	Irion County	31.3	259.0
TX	Jack County	33.2	261.8
TX	Jackson County	28.9	263.4
TX	Jasper County	30.8	266.0
TX	Jeff Davis County	30.7	255.9
TX	Jefferson County	30.0	265.9
TX	Jim Hogg County	27.1	261.3
TX	Jim Wells County	27.7	261.9
TX	Johnson County	32.4	262.7
TX	Jones County	32.8	260.1
TX	Karnes County	28.9	262.1
TX	Kaufman County	32.6	263.7
TX	Kendall County	29.9	261.3
TX	Kenedy County	26.9	262.3
TX	Kent County	33.2	259.3
TX	Kerr County	30.0	260.8
TX	Kimble County	30.5	260.3
TX	King County	33.6	259.7
TX	Kinney County	29.3	259.6
TX	Kleberg County	27.5	262.1
TX	Knox County	33.5	260.3
TX	Lamar County	33.7	264.4
TX	Lamb County	34.1	257.6
TX	Lampasas County	31.1	261.8
TX	La Salle County	28.4	260.8
TX	Lavaca County	29.4	263.0
TX	Lee County	30.3	263.1
TX	Leon County	31.3	263.9
TX	Liberty County	30.2	265.2
TX	Limestone County	31.6	263.4
TX	Lipscomb County	36.3	259.7
TX	Live Oak County	28.3	261.9
TX	Llano County	30.7	261.4
TX	Loving County	31.8	256.4
TX	Lubbock County	33.6	258.1
TX	Lynn County	33.2	258.2
TX	McCulloch County	31.2	260.7
TX	McLennan County	31.5	262.8
TX	McMullen County	28.4	261.5
TX	Madison County	31.0	264.0
TX	Marion County	32.8	265.6
TX	Martin County	32.3	258.1
TX	Mason County	30.8	260.8
TX	Matagorda County	28.9	264.0
TX	Maverick County	28.7	259.6
TX	Medina County	29.3	261.0
TX	Menard County	30.9	260.2
TX	Midland County	32.0	257.9
TX	Milam County	30.8	263.0
TX	Mills County	31.5	261.4
TX	Mitchell County	32.3	259.1
TX	Montague County	33.7	262.3

Source: US Census Bureau. Data is provided "as-is". Not responsible for errors.

TX	Montgomery County	30.3	264.5
TX	Moore County	35.9	258.1
TX	Morris County	33.1	265.3
TX	Motley County	34.1	259.2
TX	Nacogdoches County	31.6	265.4
TX	Navarro County	32.1	263.5
TX	Newton County	30.8	266.3
TX	Nolan County	32.4	259.6
TX	Nueces County	27.7	262.5
TX	Ochiltree County	36.3	259.2
TX	Oldham County	35.4	257.4
TX	Orange County	30.1	266.2
TX	Palo Pinto County	32.8	261.7
TX	Panola County	32.2	265.7
TX	Parker County	32.8	262.2
TX	Parmer County	34.5	257.2
TX	Pecos County	30.9	257.3
TX	Polk County	30.8	265.1
TX	Potter County	35.3	258.2
TX	Presidio County	30.0	255.8
TX	Rains County	32.9	264.2
TX	Randall County	35.1	258.1
TX	Reagan County	31.3	258.5
TX	Real County	29.8	260.1
TX	Red River County	33.6	264.9
TX	Reeves County	31.3	256.4
TX	Refugio County	28.3	262.8
TX	Roberts County	35.8	259.2
TX	Robertson County	31.0	263.4
TX	Rockwall County	32.9	263.6
TX	Runnels County	31.8	260.0
TX	Rusk County	32.2	265.2
TX	Sabine County	31.3	266.1
TX	San Augustine County	31.4	265.8
TX	San Jacinto County	30.6	264.9
TX	San Patricio County	28.0	262.5
TX	San Saba County	31.2	261.2
TX	Schleicher County	30.9	259.5
TX	Scurry County	32.7	259.0
TX	Shackelford County	32.7	260.7
TX	Shelby County	31.8	265.9
TX	Sherman County	36.3	258.1
TX	Smith County	32.3	264.7
TX	Somervell County	32.2	262.2
TX	Starr County	26.5	261.2
TX	Stephens County	32.7	261.1
TX	Sterling County	31.8	259.0
TX	Stonewall County	33.2	259.8
TX	Sutton County	30.5	259.4
TX	Swisher County	34.5	258.3
TX	Tarrant County	32.8	262.7
TX	Taylor County	32.4	260.2
TX	Terrell County	30.2	257.9
TX	Terry County	33.2	257.7
TX	Throckmorton County	33.2	260.8
TX	Titus County	33.2	265.0
TX	Tom Green County	31.4	259.5
TX	Travis County	30.3	262.2
TX	Trinity County	31.0	264.8
TX	Tyler County	30.8	265.6
TX	Upshur County	32.7	265.1
TX	Upton County	31.3	257.9
TX	Uvalde County	29.3	260.3
TX	Val Verde County	29.6	259.0
TX	Van Zandt County	32.6	264.2
TX	Victoria County	28.8	263.0
TX	Walker County	30.7	264.5
TX	Waller County	30.0	264.0
TX	Ward County	31.5	257.0
TX	Washington County	30.2	263.6
TX	Webb County	27.6	260.6
TX	Wharton County	29.3	263.8
TX	Wheeler County	35.4	259.7
TX	Wichita County	33.9	261.4
TX	Wilbarger County	34.1	260.8
TX	Willacy County	26.5	262.2
TX	Williamson County	30.6	262.3
TX	Wilson County	29.2	261.9
TX	Winkler County	31.8	256.9
TX	Wise County	33.2	262.3
TX	Wood County	32.8	264.6
TX	Yoakum County	33.1	257.2
TX	Young County	33.2	261.3
TX	Zapata County	27.0	260.8
TX	Zavala County	28.9	260.2
UT	Beaver County	38.3	247.0
UT	Box Elder County	41.6	247.5
UT	Cache County	41.8	248.2
UT	Carbon County	39.6	249.2
UT	Daggett County	40.9	250.5
UT	Davis County	41.0	248.1
UT	Duchesne County	40.2	249.7
UT	Emery County	39.2	249.1
UT	Garfield County	37.8	248.1
UT	Grand County	38.8	250.5
UT	Iron County	37.8	246.8
UT	Juab County	39.7	247.7
UT	Kane County	37.3	247.6
UT	Millard County	39.1	247.1
UT	Morgan County	41.1	248.4
UT	Piute County	38.3	247.9
UT	Rich County	41.7	248.7
UT	Salt Lake County	40.7	248.1
UT	San Juan County	37.4	250.5
UT	Sanpete County	39.4	248.4
UT	Sevier County	38.8	248.1
UT	Summit County	40.8	248.7
UT	Tooele County	40.4	247.3
UT	Uintah County	40.3	250.4
UT	Utah County	40.2	248.3
UT	Wasatch County	40.5	248.6
UT	Washington County	37.2	246.5
UT	Wayne County	38.3	248.7
UT	Weber County	41.2	248.0
VT	Addison County	44.0	286.8
VT	Bennington County	43.0	286.9
VT	Caledonia County	44.5	287.9
VT	Chittenden County	44.5	286.9
VT	Essex County	44.7	288.3
VT	Franklin County	44.9	287.0
VT	Grand Isle County	44.8	286.7
VT	Lamoille County	44.6	287.4
VT	Orange County	44.0	287.6
VT	Orleans County	44.8	287.8
VT	Rutland County	43.6	286.9
VT	Washington County	44.2	287.4
VT	Windham County	43.0	287.3
VT	Windsor County	43.6	287.5
VA	Accomack County	37.8	284.4
VA	Albemarle County	38.0	281.5
VA	Alleghany County	37.8	280.0
VA	Amelia County	37.3	282.0
VA	Amherst County	37.6	280.9
VA	Appomattox County	37.4	281.2
VA	Arlington County	38.9	282.9
VA	Augusta County	38.1	280.9
VA	Bath County	38.0	280.3
VA	Bedford County	37.3	280.4
VA	Bland County	37.1	278.9
VA	Botetourt County	37.5	280.2
VA	Brunswick County	36.8	282.1
VA	Buchanan County	37.3	278.0
VA	Buckingham County	37.6	281.5
VA	Campbell County	37.2	280.9
VA	Caroline County	38.0	282.6
VA	Carroll County	36.7	279.3
VA	Charles City County	37.3	282.9
VA	Charlotte County	37.0	281.4
VA	Chesterfield County	37.4	282.5
VA	Clarke County	39.1	282.0
VA	Craig County	37.5	279.8
VA	Culpeper County	38.5	282.0
VA	Cumberland County	37.5	281.7
VA	Dickenson County	37.1	277.6
VA	Dinwiddie County	37.1	282.4
VA	Essex County	37.9	283.1
VA	Fairfax County	38.8	282.8
VA	Fauquier County	38.7	282.2
VA	Floyd County	36.9	279.6
VA	Fluvanna County	37.9	281.7
VA	Franklin County	37.0	280.1
VA	Frederick County	39.2	281.8
VA	Giles County	37.3	279.3
VA	Gloucester County	37.4	283.5
VA	Goochland County	37.7	282.1
VA	Grayson County	36.6	278.8
VA	Greene County	38.3	281.5
VA	Greensville County	36.7	282.4
VA	Halifax County	36.7	281.1
VA	Hanover County	37.7	282.6
VA	Henrico County	37.6	282.5
VA	Henry County	36.7	280.1
VA	Highland County	38.4	280.4
VA	Isle of Wight County	36.9	283.3
VA	James City County	37.3	283.2
VA	King and Queen County	37.7	283.1
VA	King George County	38.3	282.8
VA	King William County	37.7	283.0
VA	Lancaster County	37.7	283.5
VA	Lee County	36.7	276.9

Source: US Census Bureau. Data is provided "as-is". Not responsible for errors.

VA	Loudoun County	39.1	282.4
VA	Louisa County	38.0	282.0
VA	Lunenburg County	36.9	281.8
VA	Madison County	38.4	281.7
VA	Mathews County	37.4	283.7
VA	Mecklenburg County	36.7	281.7
VA	Middlesex County	37.6	283.5
VA	Montgomery County	37.2	279.6
VA	Nelson County	37.8	281.1
VA	New Kent County	37.5	283.0
VA	Northampton County	37.4	284.1
VA	Northumberland County	37.9	283.6
VA	Nottoway County	37.1	281.9
VA	Orange County	38.2	281.9
VA	Page County	38.6	281.5
VA	Patrick County	36.7	279.7
VA	Pittsylvania County	36.8	280.6
VA	Powhatan County	37.6	282.1
VA	Prince Edward County	37.2	281.6
VA	Prince George County	37.2	282.7
VA	Prince William County	38.7	282.6
VA	Pulaski County	37.1	279.3
VA	Rappahannock County	38.7	281.8
VA	Richmond County	37.9	283.3
VA	Roanoke County	37.3	280.0
VA	Rockbridge County	37.8	280.6
VA	Rockingham County	38.5	281.2
VA	Russell County	36.9	277.9
VA	Scott County	36.7	277.4
VA	Shenandoah County	38.9	281.4
VA	Smyth County	36.8	278.4
VA	Southampton County	36.7	282.9
VA	Spotsylvania County	38.2	282.4
VA	Stafford County	38.4	282.6
VA	Surry County	37.1	283.1
VA	Sussex County	36.9	282.7
VA	Tazewell County	37.1	278.4
VA	Warren County	38.9	281.8
VA	Washington County	36.7	278.0
VA	Westmoreland County	38.2	283.2
VA	Wise County	37.0	277.4
VA	Wythe County	36.9	278.9
VA	York County	37.2	283.5
VA	Alexandria city	38.8	282.9
VA	Bedford city	37.3	280.5
VA	Bristol city	36.6	277.8
VA	Buena Vista city	37.7	280.6
VA	Charlottesville city	38.0	281.5
VA	Chesapeake city	36.8	283.7
VA	Clifton Forge city	37.8	280.2
VA	Colonial Heights city	37.3	282.6
VA	Covington city	37.8	280.0
VA	Danville city	36.6	280.6
VA	Emporia city	36.7	282.5
VA	Fairfax city	38.9	282.7
VA	Falls Church city	38.9	282.8
VA	Franklin city	36.7	283.1
VA	Fredericksburg city	38.3	282.5
VA	Galax city	36.7	279.1
VA	Hampton city	37.0	283.6
VA	Harrisonburg city	38.4	281.1
VA	Hopewell city	37.3	282.7
VA	Lexington city	37.8	280.6
VA	Lynchburg city	37.4	280.8
VA	Manassas city	38.8	282.5
VA	Manassas Park city	38.8	282.5
VA	Martinsville city	36.7	280.1
VA	Newport News city	37.1	283.5
VA	Norfolk city	36.9	283.7
VA	Norton city	36.9	277.4
VA	Petersburg city	37.2	282.6
VA	Poquoson city	37.1	283.6
VA	Portsmouth city	36.8	283.7
VA	Radford city	37.1	279.4
VA	Richmond city	37.5	282.5
VA	Roanoke city	37.3	280
VA	Salem city	37.3	279.9
VA	Staunton city	38.2	280.9
VA	Suffolk city	36.7	283.4
VA	Virginia Beach city	36.8	283.9
VA	Waynesboro city	38.1	281.1
VA	Williamsburg city	37.3	283.3
VA	Winchester city	39.2	281.8
WA	Adams County	47.0	241.3
WA	Asotin County	46.3	242.9
WA	Benton County	46.2	240.6
WA	Chelan County	47.6	239.6
WA	Clallam County	48.1	236.2
WA	Clark County	45.7	237.5
WA	Columbia County	46.3	242.0
WA	Cowlitz County	46.2	237.3
WA	Douglas County	47.7	240.1
WA	Ferry County	48.5	241.5
WA	Franklin County	46.4	241.0
WA	Garfield County	46.4	242.5
WA	Grant County	47.2	240.6
WA	Grays Harbor County	47.1	236.2
WA	Island County	48.2	237.4
WA	Jefferson County	47.9	236.8
WA	King County	47.5	237.8
WA	Kitsap County	47.6	237.4
WA	Kittitas County	47.1	239.3
WA	Klickitat County	45.9	239.0
WA	Lewis County	46.6	237.3
WA	Lincoln County	47.6	241.6
WA	Mason County	47.3	236.9
WA	Okanogan County	48.5	240.4
WA	Pacific County	46.5	236.2
WA	Pend Oreille County	48.5	242.7
WA	Pierce County	47.2	237.6
WA	San Juan County	48.6	237.0
WA	Skagit County	48.5	237.8
WA	Skamania County	45.9	238.0
WA	Snohomish County	48.0	237.9
WA	Spokane County	47.7	242.6
WA	Stevens County	48.4	242.2
WA	Thurston County	47.0	237.2
WA	Wahkiakum County	46.3	236.5
WA	Walla Walla County	46.1	241.6
WA	Whatcom County	48.8	237.6
WA	Whitman County	46.9	242.6
WA	Yakima County	46.5	239.5
WV	Barbour County	39.1	280.0
WV	Berkeley County	39.5	282.0
WV	Boone County	38.1	278.3
WV	Braxton County	38.7	279.3
WV	Brooke County	40.3	279.4
WV	Cabell County	38.4	277.7
WV	Calhoun County	38.9	278.9
WV	Clay County	38.5	278.9
WV	Doddridge County	39.3	279.3
WV	Fayette County	38.0	278.9
WV	Gilmer County	38.9	279.2
WV	Grant County	39.1	280.8
WV	Greenbrier County	37.9	279.5
WV	Hampshire County	39.3	281.4
WV	Hancock County	40.5	279.4
WV	Hardy County	39.0	281.1
WV	Harrison County	39.3	279.7
WV	Jackson County	38.8	278.3
WV	Jefferson County	39.3	282.2
WV	Kanawha County	38.3	278.4
WV	Lewis County	39.0	279.5
WV	Lincoln County	38.2	277.9
WV	Logan County	37.8	278.0
WV	McDowell County	37.4	278.4
WV	Marion County	39.5	279.8
WV	Marshall County	39.9	279.3
WV	Mason County	38.8	278.0
WV	Mercer County	37.3	278.8
WV	Mineral County	39.4	281.1
WV	Mingo County	37.7	277.8
WV	Monongalia County	39.6	280.0
WV	Monroe County	37.6	279.4
WV	Morgan County	39.6	281.7
WV	Nicholas County	38.3	279.2
WV	Ohio County	40.1	279.3
WV	Pendleton County	38.7	280.7
WV	Pleasants County	39.4	278.8
WV	Pocahontas County	38.3	280.0
WV	Preston County	39.5	280.3
WV	Putnam County	38.5	278.1
WV	Raleigh County	37.8	278.8
WV	Randolph County	38.8	280.1
WV	Ritchie County	39.2	278.9
WV	Roane County	38.7	278.6
WV	Summers County	37.7	279.2
WV	Taylor County	39.3	280.0
WV	Tucker County	39.1	280.4
WV	Tyler County	39.5	279.1
WV	Upshur County	38.9	279.8
WV	Wayne County	38.2	277.5
WV	Webster County	38.5	279.6
WV	Wetzel County	39.6	279.3
WV	Wirt County	39.0	278.6
WV	Wood County	39.3	278.5
WV	Wyoming County	37.6	278.5
WI	Adams County	44.0	270.2
WI	Ashland County	46.3	269.3
WI	Barron County	45.4	268.2

Source: US Census Bureau. Data is provided "as-is". Not responsible for errors.

WI	Bayfield County	46.5	268.8
WI	Brown County	44.5	272.0
WI	Buffalo County	44.4	268.2
WI	Burnett County	45.9	267.6
WI	Calumet County	44.1	271.8
WI	Chippewa County	45.0	268.7
WI	Clark County	44.8	269.4
WI	Columbia County	43.5	270.7
WI	Crawford County	43.2	269.0
WI	Dane County	43.1	270.6
WI	Dodge County	43.4	271.3
WI	Door County	45.0	272.7
WI	Douglas County	46.5	268.1
WI	Dunn County	44.9	268.1
WI	Eau Claire County	44.8	268.6
WI	Florence County	45.8	271.6
WI	Fond du Lac County	43.8	271.5
WI	Forest County	45.6	271.2
WI	Grant County	42.9	269.3
WI	Green County	42.7	270.4
WI	Green Lake County	43.8	271.0
WI	Iowa County	43.0	269.9
WI	Iron County	46.3	269.8
WI	Jackson County	44.3	269.1
WI	Jefferson County	43.0	271.2
WI	Juneau County	43.9	269.9
WI	Kenosha County	42.6	272.0
WI	Kewaunee County	44.5	272.4
WI	La Crosse County	43.9	268.8
WI	Lafayette County	42.7	269.9
WI	Langlade County	45.2	270.9
WI	Lincoln County	45.3	270.3
WI	Manitowoc County	44.1	272.2
WI	Marathon County	44.9	270.3
WI	Marinette County	45.3	272.1
WI	Marquette County	43.8	270.6
WI	Menominee County	44.9	271.4
WI	Milwaukee County	43.0	272.0
WI	Monroe County	43.9	269.4
WI	Oconto County	45.0	271.8
WI	Oneida County	45.7	270.5
WI	Outagamie County	44.3	271.6
WI	Ozaukee County	43.3	272.1
WI	Pepin County	44.6	268.0
WI	Pierce County	44.7	267.5
WI	Polk County	45.5	267.5
WI	Portage County	44.5	270.5
WI	Price County	45.7	269.6
WI	Racine County	42.7	272.0
WI	Richland County	43.4	269.6
WI	Rock County	42.7	271.0
WI	Rusk County	45.4	268.9
WI	St. Croix County	45.0	267.5
WI	Sauk County	43.4	270.1
WI	Sawyer County	45.9	268.7
WI	Shawano County	44.8	271.2
WI	Sheboygan County	43.7	272.1
WI	Taylor County	45.2	269.5
WI	Trempealeau County	44.3	268.6
WI	Vernon County	43.6	269.2
WI	Vilas County	46.0	270.5
WI	Walworth County	42.6	271.5
WI	Washburn County	45.9	268.2
WI	Washington County	43.4	271.8
WI	Waukesha County	43.0	271.7
WI	Waupaca County	44.5	271.0
WI	Waushara County	44.1	270.7
WI	Winnebago County	44.1	271.4
WI	Wood County	44.4	270.0
WY	Albany County	41.4	254.3
WY	Big Horn County	44.5	251.9
WY	Campbell County	44.1	254.5
WY	Carbon County	41.7	253.1
WY	Converse County	42.9	254.5
WY	Crook County	44.6	255.4
WY	Fremont County	43.1	251.3
WY	Goshen County	42.1	255.7
WY	Hot Springs County	43.7	251.7
WY	Johnson County	44.1	253.4
WY	Laramie County	41.2	255.2
WY	Lincoln County	42.2	249.3
WY	Natrona County	42.9	253.5
WY	Niobrara County	43.0	255.5
WY	Park County	44.6	251.0
WY	Platte County	42.2	255.1
WY	Sheridan County	44.8	253.0
WY	Sublette County	42.8	250.0
WY	Sweetwater County	41.6	250.8
WY	Teton County	43.6	249.3
WY	Uinta County	41.3	249.4
WY	Washakie County	44.0	252.3
WY	Weston County	43.9	255.4
PR	Adjuntas Municipio	18.2	293.3
PR	Aguada Municipio	18.4	292.8
PR	Aguadilla Municipio	18.5	292.9
PR	Aguas Buenas Municipio	18.3	293.9
PR	Aibonito Municipio	18.1	293.7
PR	A±asco Municipio	18.3	292.9
PR	Arecibo Municipio	18.4	293.3
PR	Arroyo Municipio	18.0	293.9
PR	Barceloneta Municipio	18.5	293.4
PR	Barranquitas Municipio	18.2	293.7
PR	Bayam?n Municipio	18.4	293.8
PR	Cabo Rojo Municipio	18.1	292.8
PR	Caguas Municipio	18.2	294.0
PR	Camuy Municipio	18.4	293.1
PR	Can?vanas Municipio	18.4	294.1
PR	Carolina Municipio	18.4	294.0
PR	Cata±o Municipio	18.4	293.9
PR	Cayey Municipio	18.1	293.8
PR	Ceiba Municipio	18.3	294.3
PR	Ciales Municipio	18.3	293.5
PR	Cidra Municipio	18.2	293.8
PR	Coamo Municipio	18.1	293.6
PR	Comer?o Municipio	18.2	293.8
PR	Corozal Municipio	18.3	293.7
PR	Culebra Municipio	18.3	294.7
PR	Dorado Municipio	18.4	293.7
PR	Fajardo Municipio	18.3	294.3
PR	Florida Municipio	18.4	293.4
PR	Gußnica Municipio	18.0	293.1
PR	Guayama Municipio	18.0	293.9
PR	Guayanilla Municipio	18.0	293.2
PR	Guaynabo Municipio	18.4	293.9
PR	Gurabo Municipio	18.3	294.0
PR	Hatillo Municipio	18.4	293.2
PR	Hormigueros Municipio	18.1	292.9
PR	Humacao Municipio	18.1	294.2
PR	Isabela Municipio	18.5	293.0
PR	Jayuya Municipio	18.2	293.4
PR	Juana D?az Municipio	18.0	293.5
PR	Juncos Municipio	18.2	294.1
PR	Lajas Municipio	18.0	293.0
PR	Lares Municipio	18.3	293.1
PR	Las Mar?as Municipio	18.2	293.0
PR	Las Piedras Municipio	18.2	294.1
PR	Lo?za Municipio	18.4	294.1
PR	Luquillo Municipio	18.4	294.3
PR	Manat? Municipio	18.4	293.5
PR	Maricao Municipio	18.2	293.0
PR	Maunabo Municipio	18.0	294.1
PR	Mayag?ez Municipio	18.2	292.9
PR	Moca Municipio	18.4	292.9
PR	Morovis Municipio	18.3	293.6
PR	Naguabo Municipio	18.2	294.3
PR	Naranjito Municipio	18.3	293.7
PR	Orocovis Municipio	18.2	293.6
PR	Patillas Municipio	18.0	294.0
PR	Pe±uelas Municipio	18.1	293.3
PR	Ponce Municipio	18.0	293.4
PR	Quebradillas Municipio	18.5	293.1
PR	Rinc?n Municipio	18.3	292.8
PR	R?o Grande Municipio	18.4	294.2
PR	Sabana Grande Municipio	18.1	293.1
PR	Salinas Municipio	18.0	293.7
PR	San Germßn Municipio	18.1	293.0
PR	San Juan Municipio	18.4	293.9
PR	San Lorenzo Municipio	18.2	294.0
PR	San Sebastißn Municipio	18.3	293.0
PR	Santa Isabel Municipio	18.0	293.6
PR	Toa Alta Municipio	18.4	293.8
PR	Toa Baja Municipio	18.4	293.8
PR	Trujillo Alto Municipio	18.3	294.0
PR	Utuado Municipio	18.3	293.3
PR	Vega Alta Municipio	18.4	293.7
PR	Vega Baja Municipio	18.4	293.6
PR	Vieques Municipio	18.1	294.5
PR	Villalba Municipio	18.1	293.5
PR	Yabucoa Municipio	18.1	294.1
PR	Yauco Municipio	18.1	293.1

Source: US Census Bureau. Data is provided "as-is". Not responsible for errors.

Appendix B: Table of time zone difference from UTC

Time Zone	Major Cities	Symbol	Difference from UTC
Atlantic Time	San Juan	AST	20
Eastern Time	Boston, New York, Washington DC, Miami	EST	19
Central Time	Minneapolis, New Orleans, Houston, Chicago	CST	18
Mountain Time	Salt Lake City, Boise, Denver	MST	17
Pacific Time	Seattle, San Francisco, Los Angeles, Las Vegas	PST	16
Alaska Time	Fairbanks	AKST	15
Hawaii-Aleutian Time	Honolulu	HAST	14

Enter the difference from UTC (Coordinate Universal Time)/GMT (Greenwich Mean Time) for your time zone when you configure the Weather Station as par chapter 9. Do not consider daylight saving time when making this entry. Follow instructions for setting the status of daylight saving time as a separate entry.

ELV Electronics Ltd. · Hongkong