HARMAN COMPANY PROPRIETARY & CONFIDENTIAL DOCUMENT – DO NOT DISCLOSE
Governed by existing NDAs with TI & its subcontractors,
and Woori/Danech & its subcontractors

Block Diagram

AA/JBL
AVR21EN/ER600 BLOCK

REVISION RECORD		
NO.	Date	Contents

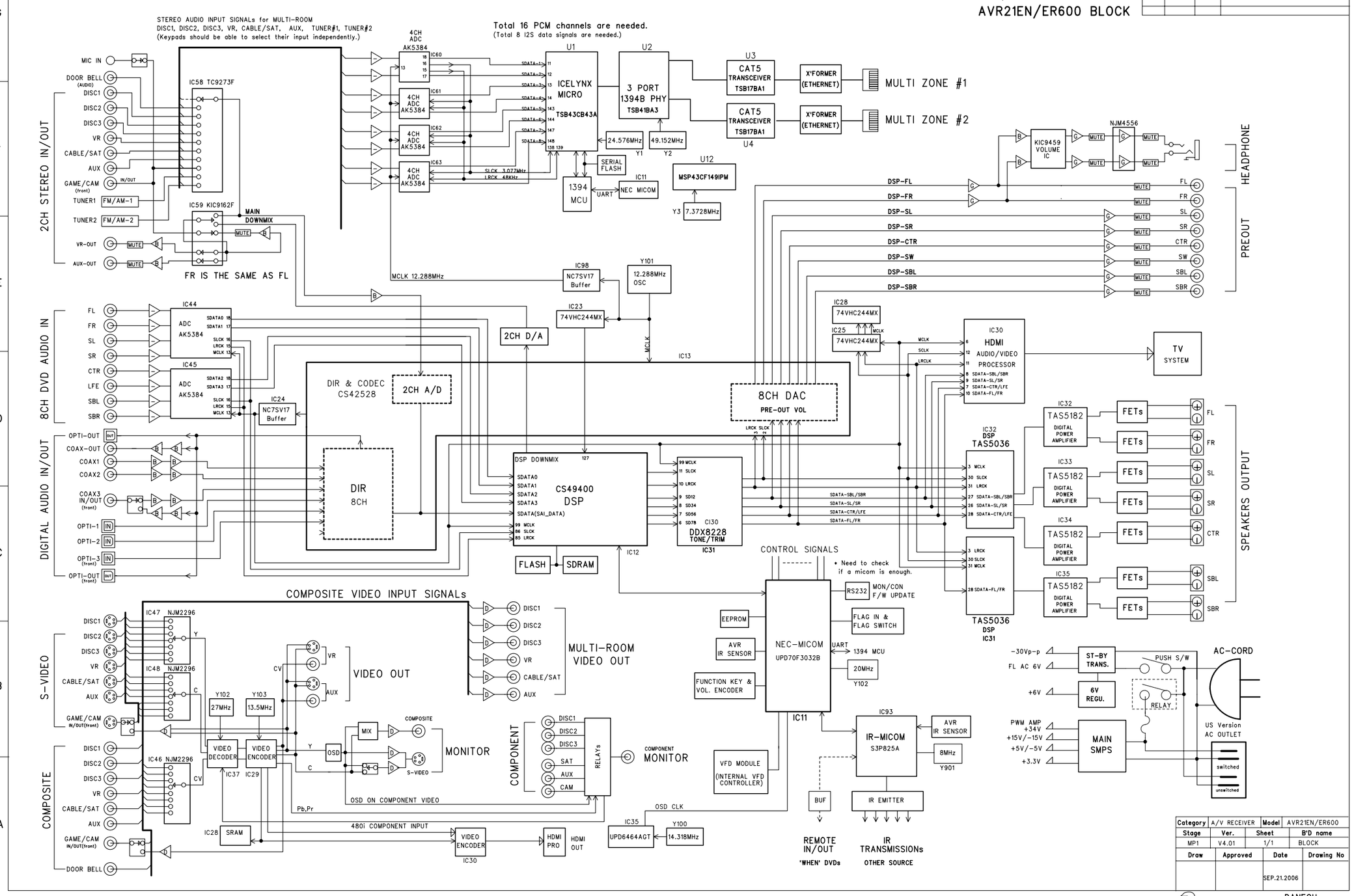

Category	A/V RECEIVER	Model	AVR21EN/ER600
Stage	Ver.	Sheet	B'D name
MP1	V4.01	1/1	BLOCK
Draw	Approved	Date	Drawing No
		SEP.21.2006	

DANECH COMPANY LTD.

Wiring Diagram

AA/JBL
AVR21EN(ER600) WIRING

REVISION RECORD		
NO.	Date	Contents

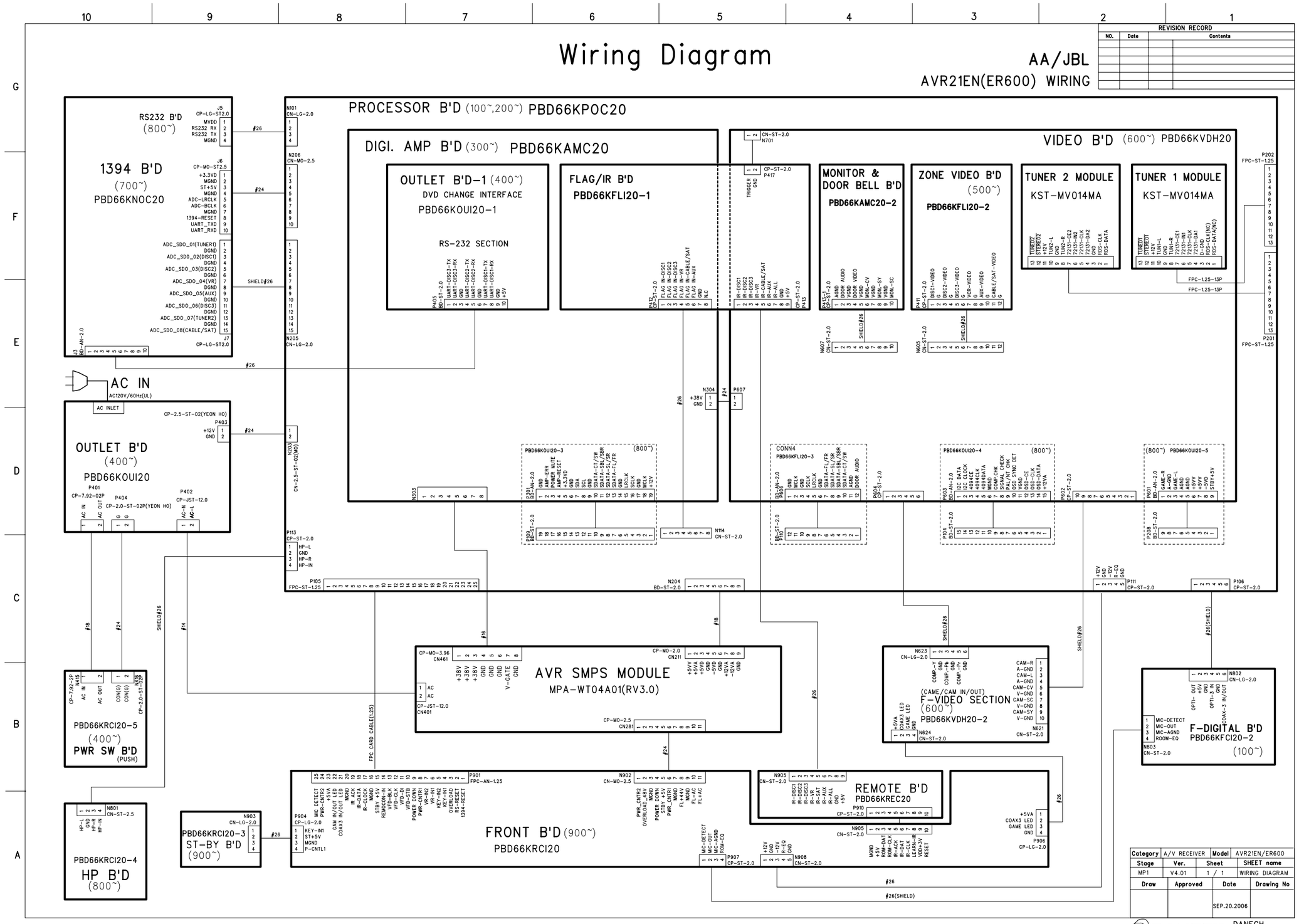

Category	A/V RECEIVER	Model	AVR21EN/ER600
Stage	Ver.	Sheet	SHEET name
MP1	V4.01	1 / 1	WIRING DIAGRAM
Draw	Approved	Date	Drawing No
		SEP.20.2006	

DANECH COMPANY LTD.