Yahsat Tactical Radio Extender Vehicular

Installation and user manual

Document number: 98-184629-DraftC02

Release date: March 11, 2025

Disclaimer

Any responsibility or liability for loss or damage in connection with the use of this product and the accompanying documentation is disclaimed by Thrane & Thrane A/S. The information in this manual is provided for information purposes only, is subject to change without notice and may contain errors or inaccuracies. Manuals issued by Thrane & Thrane A/S are periodically revised and updated. Anyone relying on this information should acquire the most current version e.g. from the partner portal at partnerportal.cobhamsatcom.com, or from the distributor. Thrane & Thrane A/S is not responsible for the content or accuracy of any translations or reproductions, in whole or in part, of this manual from any other source. In the event of any discrepancies, the English version shall be the governing text.

Thrane & Thrane A/S is trading as Cobham Satcom.

Copyright

© 2025 Thrane & Thrane A/S. All rights reserved.

Manufacturer address

Thrane & Thrane A/S, Lundtoftegårdsvej 93D, DK-2800, Kgs. Lyngby, Denmark

Disposal

Old electrical and electronic equipment marked with this symbol can contain substances hazardous to human beings and the environment. Never dispose these items together with unsorted municipal waste (household waste). In order to protect the environment and ensure the correct recycling of old equipment as well as the re-utilization of individual components, use either public collection or private collection by the local distributor of old electrical and electronic equipment marked with this symbol.

Contact the local distributor for information about what type of return system to use.

Safety summary

The following general safety precautions must be observed during all phases of operation, service and repair of this equipment. Failure to comply with these precautions or with specific warnings elsewhere in this manual violates safety standards of design, manufacture and intended use of the equipment. Thrane & Thrane A/S assumes no liability for the customer's failure to comply with these requirements.

Keep away from the antenna
The antenna for the Yahsat Tactical Radio Extender (T-TAC) system emits radio frequency energy when switched on. To avoid injury, keep a minimum safety distance of 23 cm from the antenna.

Do not operate in an explosive atmosphere
Do not operate the equipment in the presence of flammable gases or fumes. Operation of any electrical equipment in such an environment constitutes a definite safety hazard.

Do not substitute parts or modify equipment
Because of the danger of introducing hazards, do not substitute any parts or perform any unauthorized modification to the equipment.

Power supply
The equipment must be supplied by external power sources rated 12-28 VDC (nominal), max. range: 8-32 VDC. See *Recommended power supply* on page B-1.

Service
User access to the interior of the system units is prohibited. Only a technician authorized by Cobham Satcom may perform service - failure to comply with this rule will void the warranty.

Keep away from live circuits

WARNING! Do not install the Tactical Radio Extender or exchange cables with the engine running in the vehicle.

Operating personnel must not remove equipment covers. Do not replace components with the power cable connected. Under certain conditions, dangerous voltages may exist even with the power cable removed. To avoid injuries, always disconnect power and discharge circuits before you touch them.

Install and use the T-TAC with care
Thrane & Thrane A/S assumes **no liability** for any damage caused by the antenna falling off or stressing the mounting base. It is the responsibility of the customer to ensure a safe and correct installation of the antenna. The instructions in the Installation manual are only guidelines.

WARNING! Only skilled persons may install the T-TAC.

Magnetic mount solution

WARNING! The magnetic mount solution is intended for **stationary use only**!
Driving with the magnetic mount solution is **at the customer's own risk!** If you drive in uneven terrain with a magnet mounted antenna, the antenna may detach and possibly cause injury.

WARNING! **Magnetic fields**. The magnets are **dangerous** for those wearing pacemakers, ICDs and other wearable medical devices!
Keep away from the magnets if you wear any such medical device.

WARNING! Do not place your fingers underneath the antenna when you place the antenna on the vehicle! The magnetic force is very powerful and your fingers may be hurt if they are caught between the antenna and the mounting surface.

If you intend to drive with the antenna on the vehicle, we recommend mounting the antenna with bolts through the roof instead of using the magnetic mount solution. Make sure that all mounting bolts and nuts are secured properly, and that the material of the mounting surface is strong enough to hold the antenna during the intended use.

Failure to comply with the rules above will void the warranty!

About this manual

Intended readers

This is an installation and user manual for the T-TAC, intended for installers of the system, service personnel and users.

Personnel installing or servicing the system must be properly trained. It is important that you observe all safety requirements listed in the beginning of this manual, and install the system according to the guidelines in this manual.

Manual overview

This manual has the following chapters and appendices:

- *Introduction*
- *Installation*
- *Operation*
- *Maintenance and troubleshooting*
- *Specifications*
- *Conformity*

Related documents

The below list shows the documents related to this manual and to the T-TAC system.

Refer to the NOC Portal or the *Cobham SYNC Partner Portal* for additional documentation, tech notes etc.

Title and description	Document number
Tactical Radio Extender, Quick Start Guide	98-183372
T-TAC NOC Portal Manual	98-184012
Security Policy, Yahsat T-TAC	99-183000
T-TAC Yahsat Provisioning Instructions	95-187527

Table 0-1: Related documents

Typography

In this manual, typography is used as indicated below:

Bold is used for the following purposes:

- To emphasize words.
  Example: “Do **not** touch the Generic Converter Unit during transmission”.
- To indicate what the user should select or do.
  Example: “Flip the switch to **COVERT**”.

Italic is used to emphasize the paragraph title in cross-references.

Example: “For further information, see *Connecting Cables* on page...”.

Table of contents

Chapter 1 Introduction

1.1 What is T-TAC? 1-1
1.2 The T-TAC system units 1-4

Chapter 2 Installation

2.1 What's in the box 2-1
2.2 Before installation 2-2
2.3 Installation 2-4
2.4 Connect cables 2-8

Chapter 3 Operation

3.1 Before use 3-1
3.2 To start up the system 3-2
3.3 Use of the radio system 3-3
3.4 LED functions 3-3
3.5 To test the system 3-4
3.6 To zeroize the system 3-4
3.7 To reset the system to factory default 3-5

Chapter 4 Maintenance and troubleshooting

4.1 Software update of T-TAC 4-1
4.2 Troubleshooting 4-1
4.3 Command line interface 4-2

Appendix A Specifications

A.1 Vehicular antenna, model 8064A A-1
A.2 GCU, model 8060A A-3

Appendix B Recommended power supply

B.1 Specifications for M7019-17 ..... B-1

Appendix C Conformity

C.1 EU (CE) C-1
C.2 UKCA C-1
C.3 MIL approvals C-1
C.4 RCM, Australia C-1
C.5 FCC C-2

Glossary Glossary-1

Index Index-1

List of Figures

Chapter 1 Introduction

Figure 1-1: Vehicular connection example 1-2
Figure 1-2: Satellite antenna for Vehicular use, model 8064A 1-4
Figure 1-3: Switch, LEDs and connectors on Generic Converter Unit 1-5
Figure 1-4: LEDs 1-5

Chapter 2 Installation

Figure 2-1: LAN interface for configuration. 2-2
Figure 2-2: Synchronization process in LEDs 2-3
Figure 2-3: Mounting the antenna with spacers 2-5
Figure 2-4: Dimensions for threaded holes in the antenna 2-5
Figure 2-5: GCU installation 2-7
Figure 2-6: Connect Vehicular antenna to GCU 2-8
Figure 2-7: Connect radio to GCU 2-9
Figure 2-8: Connect vehicle power to GCU 2-10

Chapter 3 Operation

Figure 3-1: Switch on system 3-2
Figure 3-2: LEDs on the GCU 3-3
Figure 3-3: Zeroization LED pattern 3-4

Chapter 4 Maintenance and troubleshooting

Appendix A Specifications

Figure A-1: Outline drawing with dimensions, Vehicular antenna A-2
Figure A-2: Outline drawing with dimensions, Generic Converter Unit A-5

Appendix B Recommended power supply

Figure B-1: Example cable for M7019-17 power supply B-3
Figure B-2: Outline drawing for for M7019-17 Power Supply B-4

Appendix C Conformity

List of tables

Table 0-1: Related documents iv

Chapter 1 Introduction

Chapter 2 Installation

Chapter 3 Operation

Table 3-1: Example of channel mapping in GCU 3-1
Table 3-2: LED patterns 3-3

Chapter 4 Maintenance and troubleshooting

Table 4-1: Troubleshooting selected issues 4-1
Table 4-2: Commands for administrator command line interface 4-2

Appendix A Specifications

Table A-1: Vehicular antenna specifications A-1
Table A-2: GCU general specifications A-3
Table A-3: GCU interface specifications A-4

Appendix B Recommended power supply

Table B-1: M7019-17 Power Supply, specifications B-1
Table B-2: Pin assignments on M7019-17 power supply B-2

Appendix C Conformity

Chapter 1

Introduction

1.1 What is T-TAC?

T-TAC, or Yahsat Tactical Radio Extender, is a communication solution for military and emergency response teams. It seamlessly converts a VHF or UHF tactical radio channel to satellite L-band transmission, expanding the Line-Of-Sight (LOS) of existing in-service VHF/UHF radios to Beyond-Line-Of-Sight (BLOS) satellite communications.

The T-TAC hardware consists of a small Generic Converter Unit (GCU) and an omni-directional L-band antenna.

The GCU converts the UHF/VHF radio's 5 or 25 kHz BW waveform to L-Band. The GCU is connected to the omni-directional L-band antenna.

The T-TAC system comes in four variants: ManPack, Vehicular, Maritime and Aeronautical.

This manual is for the **Vehicular** variant.

Service is implemented using bent pipe through a Thuraya satellite L-band uplink and downlink. This provides users with a similar experience as traditional satellite communication, but through a dedicated 5 or 25 kHz BW satellite channel. Since the system directly links L-band uplink and downlink signals, no ground infrastructure is needed to support the service. The service is operational in the Thuraya 2 and 3 satellite coverage areas and the next generation Thuraya 4 satellite footprint as well.

With its innovative and highly secure technology, the T-TAC provides reliable radio communications, even in the most remote and challenging environments.

1.1.1 Overview of a T-TAC system

The example below shows a basic T-TAC system for Vehicular use.

The T-TAC system consists of a small Generic Converter Unit (GCU) and an omni-directional L-band antenna.

The system connects to a tactical VHF/UHF radio and a power supply.

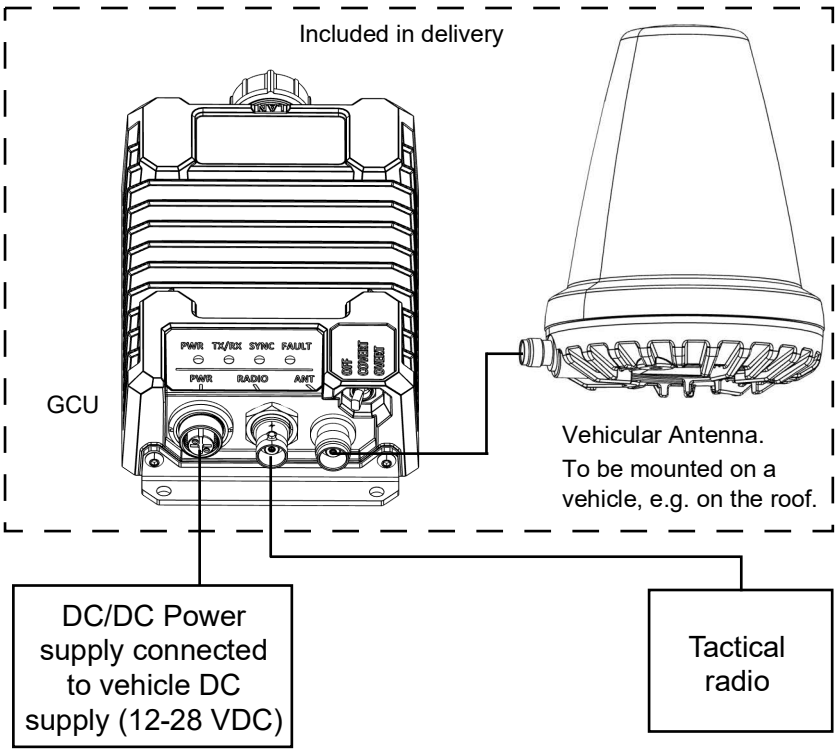

Figure 1-1: Vehicular connection example

1.1.2 Features and interfaces

The T-TAC has the following features and interfaces:

- Small antenna for connecting to the Thuraya L-band satellite network.
- Optimized for use with existing VHF/UHF radio systems.
- Keeps existing security level in radio communication.
- Encrypted secure transfer of configuration from Network Operating Center (NOC)
- Complies with military standards
- Small and light-weight system
- Ethernet port for configuration

1.1.3 Configuration

Configuration of the T-TAC system

The administrator of your T-TAC system prepares the system configuration on the server, using the NOC Portal (Network Operating Center). Description and guidance for the NOC Portal is not part of this manual. You find this information in the *T-TAC NOC Portal Manual*.

When the T-TAC connects to the closed network for the first time, it will authenticate and contact the server to get its configuration. For details, see *Configuration* on page 2-2.

Configuration of the connected radio

1. Make sure the radio system meets the requirements in the specifications in *Radio interface (RADIO)* on page A-4,
2. Configure the radio system to match the configuration parameters set up for your T-TAC system in the NOC Portal (channel numbers, frequencies etc.).

1.2 The T-TAC system units

This is a short description of the units in the T-TAC system.

Note

For mechanical installation, see *Installation* on page 2-4.

For wiring and cable requirements, see *Connect cables* on page 2-8.

1.2.1 The Vehicular antenna, model 8064A

The antenna unit is an active unit, combining the omni-directional antenna element with a low noise amplifier (LNA) for receiving and a high-power amplifier (HPA) for transmitting the L-Band satellite signals. The antenna element also hosts the GNSS antenna.

The satellite antenna provides the interface to the satellite network. To have line of sight to the satellites and to avoid human exposure to radiation, the antenna should be mounted high e.g. on the roof and without any obstacles that can block the satellite signal. The antenna connects to the **ANT** interface on the GCU through the included RF cable.

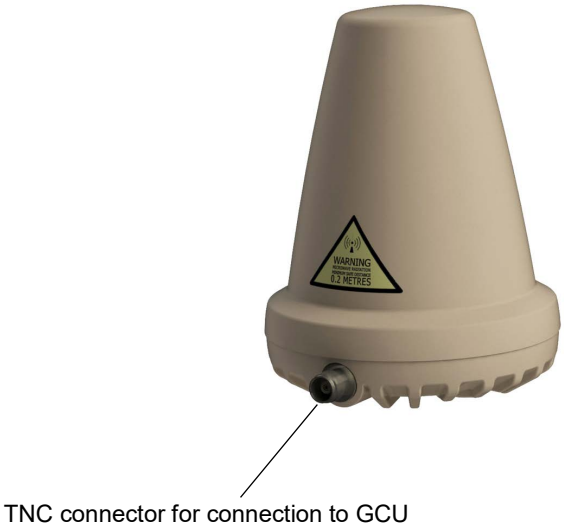

Figure 1-2: Satellite antenna for Vehicular use, model 8064A

1.2.2 The Generic Converter Unit (GCU), model 8060A

The GCU contains all system configuration and handles channel detection and conversion in the T-TAC system.

The figure below shows the connectors, switch and LEDs on the unit.

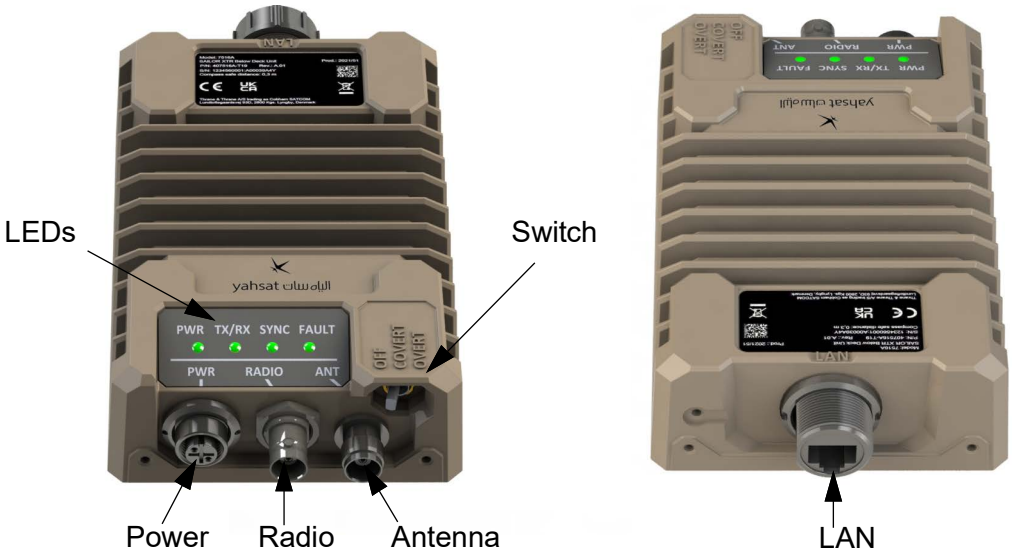

Figure 1-3: Switch, LEDs and connectors on Generic Converter Unit

Connectors:

1. **PWR** (12 - 28 VDC): Input from MIL-STD DC supply or battery.
2. **RADIO**: Connects to a tactical radio
3. **ANT**: Connects to the satellite antenna.
4. **LAN**: Ethernet interface, connects to a closed network for configuration.

Switch:

1. **OFF**: The system is switched off.
2. **COVERT**: The system is switched on in Covert mode (all LEDs are off).
3. **OVERT**: Two functions:
   - Hold the switch on OVERT for max. 20 seconds to see the status in the LED panel. When you let go of the switch it falls back to Covert mode.
   - Hold the switch on OVERT for 30 seconds to zeroize the GCU.

Light indicators (LEDs):

Figure 1-4: LEDs

1. **PWR**: Status of the DC power input.
2. **TX/RX**: Send/receive status.
3. **SYNC**: Synchronization status (with NOC Portal).
4. **FAULT**: Fault in GCU, satellite antenna, cable or GPS reception.

For details of the LED functions, see *LED functions* on page 3-3.

Installation

2.1 What's in the box

Included

The following items are included in the delivery of your Vehicular Tactical Radio Extender:

- Generic Converter Unit with flange mount.
- Vehicular antenna unit.
- Antenna mounting kit
- Antenna cable, 6 m.
- Power cable, 1 m (open-ended towards the power supply/battery).
- Quick Start Guide.

Not included

In order to use your Vehicular Tactical Radio Extender system you must supply the following equipment as a minimum:

- A radio. See specifications in *Radio interface (RADIO)* on page A-4.
- A cable for connecting the radio to the Generic Converter Unit (cables available from Cobham Satcom: 1 m BNC to BNC (part number 408060A-302) and 1 m BNC to TNC (part number 408060A-301).
- Ethernet cable (for synchronizing with the configuration server).
- A DC power supply (12-24 VDC). See specifications in *Power input (PWR)* on page A-4. For recommended power supply, see *Recommended power supply* on page B-1.
- 3 Screws for mounting the antenna (for length of the screws, see *To mount the antenna fixed on the vehicle roof (recommended)* on page 2-5).
- 4 screws for mounting the GCU, see *To install the Generic Converter Unit* on page 2-7.

2.2 Before installation

2.2.1 Configuration

Before installation, the administrator of your T-TAC system must prepare the system configuration on the server, using the NOC Portal.

Note The configuration of the radio must match the configuration in the NOC Portal.

Some of the configuration parameters set up in the NOC Portal are:

- VHF/UHF frequencies
- VHF/UHF channel width
- L-Band frequencies
- Satellite in use
- Channel mapping profiles
- Software version

To transfer the configuration parameters to the T-TAC, you must connect the GCU to the configuration server, using the LAN interface.

2.2.2 NOC specific configuration and provisioning

For the T-TAC to be able to connect to the Network Operation Center (NOC), the NOC address and certificate bundle must be installed on the device. First time NOC configuration is done through the administrator command line interface.

Yahsat will take care of provisioning and identifying each T-TAC, so that it is recognized when it is later connected to the network for configuration or software update.

For details on NOC specific configuration and provisioning, see *TTAC Yahsat Provisioning Instructions*, doc. no. 95-187527.

2.2.3 To synchronize and load the configuration into the GCU

Note The antenna must be connected to the GCU while synchronizing the configuration!

Once the T-TAC is provisioned and the configuration is ready in the NOC Portal, you can load the configuration into the GCU using the LAN interface.

Figure 2-1: LAN interface for configuration.

Do as follows:

1. Connect the antenna to the **ANT** connector on the GCU as described in *To connect the antenna* on page 2-8.
2. Connect power as described in *To connect power* on page 2-10.

3. Connect a standard Ethernet cable between the LAN connector on the GCU and the device connecting to the configuration server.[1]
4. Flip the switch from OFF to **COVERT** to switch on the GCU.
   When the GCU is turned on, it will automatically search for the configuration server.
5. Once the network is found, and the GCU has been identified as an authenticated and provisioned unit, the GCU starts synchronizing and getting its dedicated configuration.
   If a software update is available on the server, the new software version is also installed.

   Note If it is only a synchronization, this process takes a few seconds. If it is also a software update, it takes longer. You can follow the process in the LEDs.

   To follow the progress of the synchronization process, hold the switch on **OVERT** for a few seconds, **less than 20 seconds**[2].

Figure 2-2: Synchronization process in LEDs

   The LED marked **SYNC** will show the status. See Table 3-2, *LED patterns*, on page 3-3 for a description of the LED functions.
6. When the SYNC LED starts blinking green, power cycle the GCU (switch off, then on again).
7. When the **SYNC** LED turns steady green, synchronization is done, and you can remove the LAN cable.

The system is now ready for use.

Important Remember to update the radio system to the same configuration as the T-TAC.

2.2.4 Interference

Radios: Radios using the same Rx/Tx frequencies must be placed **min. 10 m apart**, to avoid direct radio to radio interference leaking.

Satellite antennas: The T-TAC anenna must be placed **min.** 3 **m** from other T-TAC or L-band antennas to avoid interference.

1. The device connecting to the configuration server can be either a device connected on ground or a satellite terminal connecting over satellite, depending on your system configuration.
2. If you hold the switch on OVERT for more than 20 seconds, you will **zeroize the GCU,** which will make it unusable! See *To zeroize the system* on page 3-4.

2.3 Installation

2.3.1 To place the antenna on the vehicle

For best performance, mount the antenna in the center of the vehicle roof and with free line of sight in all directions (no blocking objects), and preferably on a flat, leveled surface.

Before mounting the antenna, consider the following:

- **Safety distance:** 23 **cm**.
  Place the antenna so that no person can accidentally get closer to the terminal than the safety distance
- **Line of sight.**
  For best performance, mount the antenna with free line of sight in all directions (no blocking objects).
- **Distance to other equipment.**
  Place any transmitters and receivers as far from each other as possible.
- **Ventilation.**
  A ventilation hole with a Goretex membrane in the bottom of the antenna is designed to lead any humidity away from the antenna. Make sure the ventilation hole is not blocked.

Important Make sure there is always a distance of minimum 6.5 mm between any part of the antenna bottom and the mounting surface. If you are not using the included plastic spacers nor the magnets, use a 6.5 mm spacer at each bolt.

2.3.2 To install the antenna on the vehicle

WARNING! It is the responsibility of the customer to ensure a safe installation! See guidelines in the *Safety summary* on page ii.

The terminal can now be installed on the roof of the vehicle. You may choose between these methods:

- *To mount the antenna fixed on the vehicle roof (recommended)*, or
- *Magnetic mount*

To mount the antenna fixed on the vehicle roof (recommended)

The antenna may be fixed on the roof of your vehicle using the spacers from the included pack and three bolts with serrated washers (bolts and washers are not included). This solution requires that you drill three holes in the roof of the vehicle.

Note Depending on your installation, you may need to drill an extra hole in the vehicle chassis to lead the cable between antenna and GCU.

Figure 2-3: Mounting the antenna with spacers

To mount the terminal.

1. Based on Figure 2-4 below, calculate and mark up the position of the holes to be drilled in the roof of the vehicle.

   Important Before you mark up the position of the holes, make sure the antenna is oriented correctly with regards to the connector and the planned cabling.

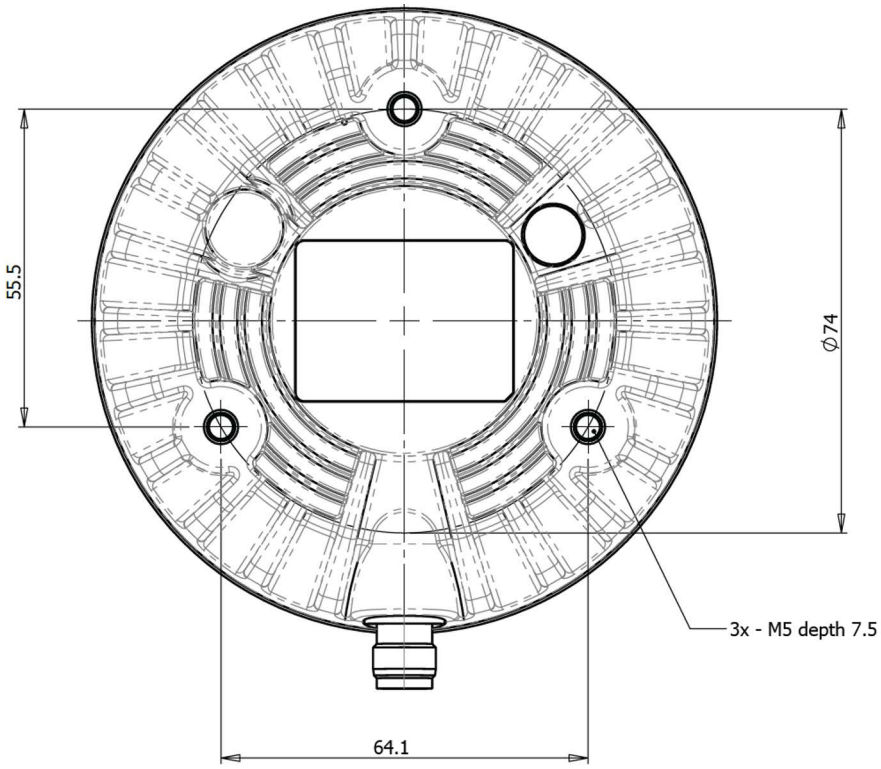

Figure 2-4: Dimensions for threaded holes in the antenna

2. Drill the 3 holes in the roof according to the previous step.
3. Add a serrated washer at the bolt head and apply Loctite 243 on each bolt before mounting the antenna with the spacers and bolts.

> **CAUTION!** The length of the bolts must be correct for your installation, that is: spacers (6.5 mm) + threaded holes (7 mm) + thickness of the mounting surface/roof and washer (if used).

   If you are using a different method, make sure you maintain a distance of minimum 6.5 mm between the mounting surface and the antenna bottom.
4. Tighten the screws to torque 4.5 Nm.

Magnetic mount

We recommend mounting the terminal with bolts through the roof instead of using magnets. However, a Magnetic Mount Solution for stationary use is available from Cobham Satcom (part number 408064A-501).

> **WARNING!** The magnetic mount solution is intended for **stationary use only**.
> Driving with the magnetic mount solution is **at the customer's own risk!** If you drive in uneven terrain with a magnet-mounted antenna, the antenna may detach and possibly cause injury.

> **WARNING!** **Magnetic fields**. The magnets are **dangerous** for those wearing pacemakers, ICDs and other wearable medical devices!
> **Keep away** from the magnets if you wear any such medical device.

The Magnetic Mount Solution consists of 3 individual high intensity magnets with rubber coating. You can place the antenna directly on the roof of the vehicle using these magnets, if the roof is made of magnetizable material.

> **CAUTION!** Refer to the *Safety summary* on page ii before using the Magnetic Mount Solution.

To mount the antenna with magnets:

1. Screw one magnet at a time into the 3 threaded holes in the bottom of the antenna.

> **WARNING!** Keep the magnets apart while mounting them. They are very powerful and may clash and hurt fingers or other body parts.

2. Make sure the mounting place on the vehicle is level and made of a magnetizable material.
3. Wipe the surface clean before you place the antenna.
   This is to make a better connection between the magnets and the mounting surface and to avoid scratches in the surface.

4. Place the antenna with magnets carefully on the mounting surface on the vehicle.

> **WARNING!** Do not place your fingers underneath the antenna when you place the antenna on the vehicle! The magnetic force is very powerful and your fingers may be hurt if they are caught between the antenna and the mounting surface.

To detach the terminal: Grab the terminal near one of the magnets and lift it. When one magnet is off, the other two are easier to detach.

2.3.3 To install the Generic Converter Unit

The GCU is designed to be mounted on a flat surface.

1. When placing the GCU, make sure there is enough space to access cables and the switch, and to see the status of the LEDs. You can find the dimensions of the GCU in Figure A-2 in Appendix A.
2. Mark up the position of the four holes for mounting the GCU.

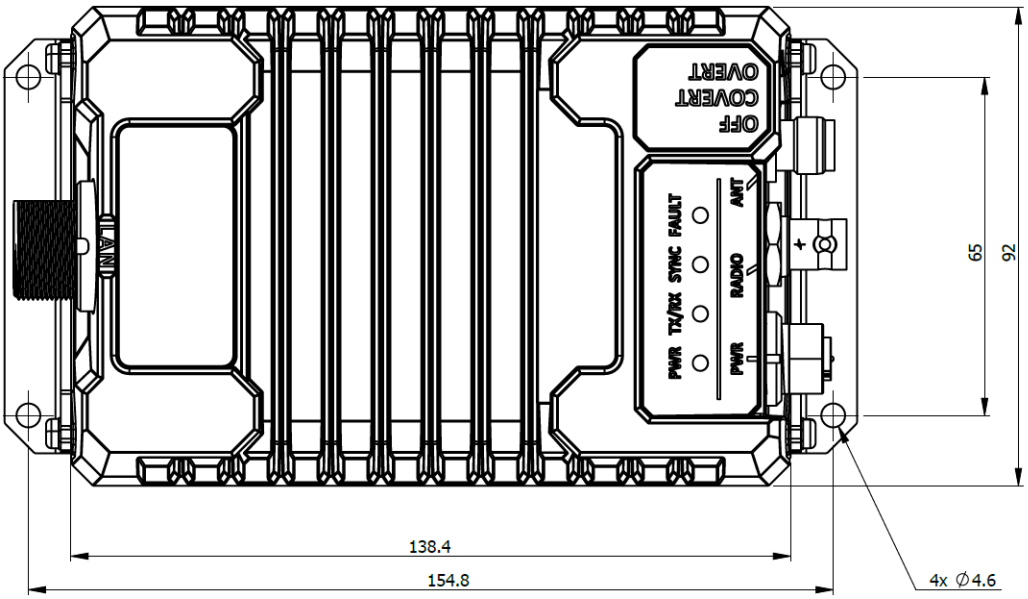

Figure 2-5: GCU installation

3. Mount the GCU with 4 screws (normal or self-tapping screws, depending on the mounting surface) through the 4 mounting holes in the mounting flanges.

> **Important** Use the mounting flange for grounding the GCU. Use serrated washers and make sure there is a good electrical connection between the mounting flanges and the vehicle chassis.

4. Connect the cables.
   Refer to *Connect cables* on page 2-8.

2.4 Connect cables

2.4.1 To connect the antenna

To connect the antenna to the GCU, use the coax cable that comes with the antenna.

1. Install the GCU and the antenna as described in the previous sections.
2. Connect the included antenna cable between the **ANT** connector on the GCU and the connector on the antenna.
3. Tighten the connectors at both ends to torque 1.7 Nm to comply with IP68.

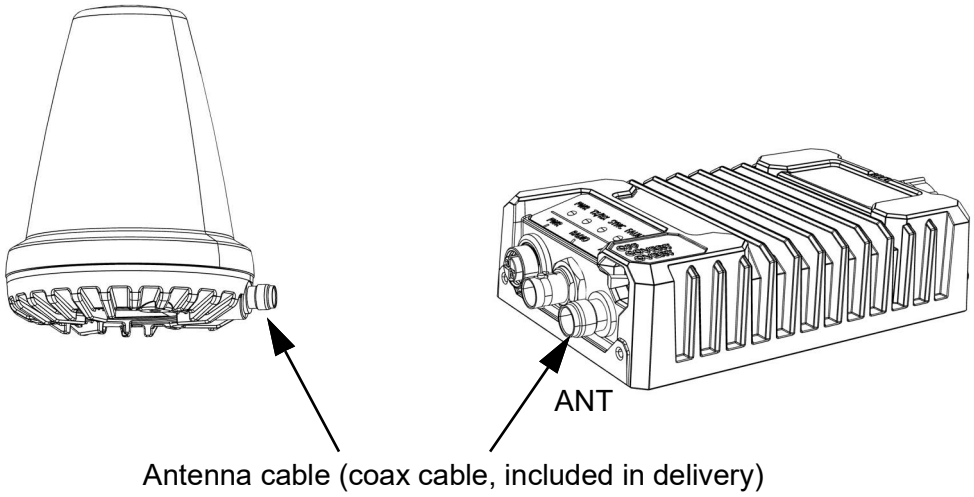

Figure 2-6: Connect Vehicular antenna to GCU

2.4.2 To connect a radio

CAUTION! Before connecting your radio, make sure it matches the specifications for the GCU RADIO interface in *Radio interface (RADIO)* on page A-4.

1. Connect the radio's antenna interface to the **RADIO** connector on the GCU using a suitable cable with max. 10 dB loss@500 MHz.
   The following radio cables are available from Cobham Satcom:
   - BNC to BNC 1 m cable, part number 408060A-302.
   - BNC to TNC 1 m cable, part number 408060A-301.
2. Tighten the TNC connector to torque 1.7 Nm to comply with IP68.

Note The listed cables are IP68 protected. In order to maintain this protection, the connector on the radio must also be (minimum) IP 68 protected.

CAUTION! Ensure that the radio output power **does not exceed 2 W,** which is the maximum allowed input power for the GCU. If your radio exceeds 2 W output power, **connect a suitable external attenuator** between the GCU and the radio.

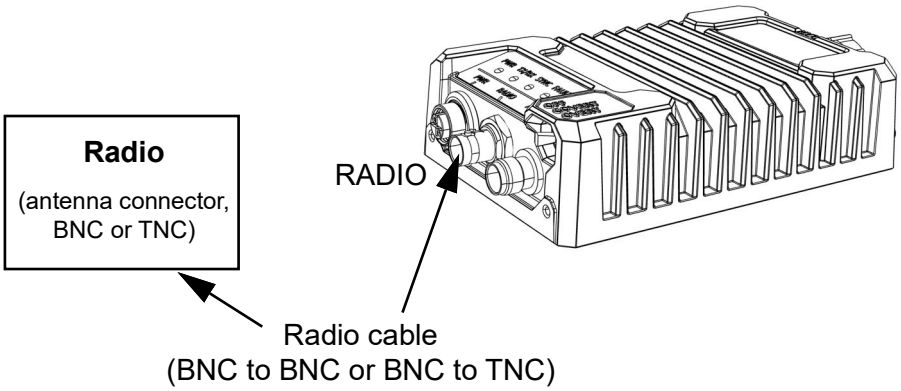

Figure 2-7: Connect radio to GCU

2.4.3 To connect power

The power input on the GCU connects to a power supply/battery of 12-28 VDC (nominal). The selected power source must meet the MIL-STD specifications in order to ensure correct operation and to avoid damaging the GCU.

1. Connect the open end of the included power cable to a suitable power source. Refer to the power specifications in *Power input (PWR)* on page A-4.

   Important The selected power source must meet the specifications in order to ensure correct operation and to avoid damaging the GCU.
   Cobham Satcom has tested and approved the system with a MIL approved 24V/28V vehicular power supply (M7019-17 DC/DC power supply from Enercon Technologies LTD). Cobham Satcom recommends this specific power supply for the application.
   See *Recommended power supply* on page B-1 for specifications.
   Please consult Cobham Satcom if you have questions about a different power supply.

2. Connect the other end of the power cable to the **PWR** connector on the GCU.

   Note The brown wire is DC+ and the black wire is DC-.
   If there is an extra wire in the power cable, cut it off at the open end as close to the cable insulation as possible.

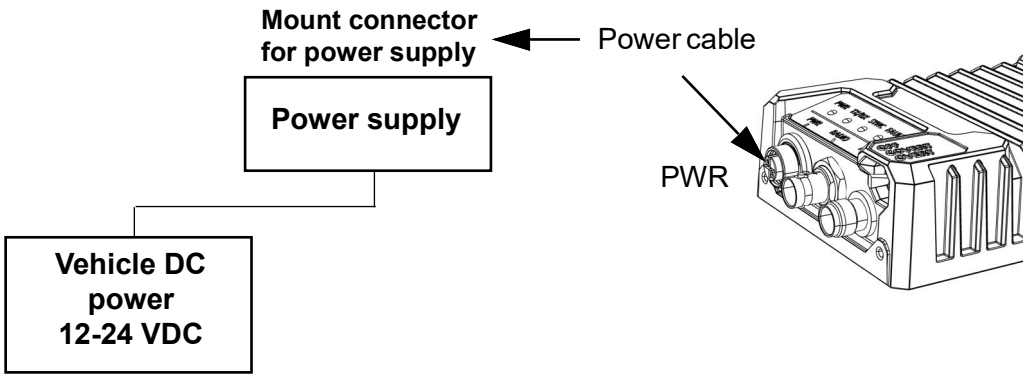

Figure 2-8: Connect vehicle power to GCU

3. Tighen the connectors to torque 0.5 to 0.8 to comply with IP68.

Operation

3.1 Before use

3.1.1 Authentication and initial configuration

Before starting up the system, the initial configuration must be done using the NOC Portal. Usually the administrator of the system takes care of this.

When the configuration is ready in the NOC Portal, and the GCU is provisioned, the GCU must be synchronized with the NOC using the Ethernet interface.

For details, see *Before installation* on page 2-2.

Channel mapping

The GCU can hold up to 6 active channel configurations, mapping a VHF or UHF (50 MHz to 500 MHz) radio channel to L-band transmit and receive channels. L-band uses separate bands for Tx (1626.5 MHz - 1660.5 MHz) and Rx (1525 MHz - 1559 MHz). Each channel configuration defines the mapping between the radio channel and the L-band Tx and Rx channels to be used. The table below is an example of this channel mapping.

Conf. ch. no.	Radio channel (50 to 500 MHz)		L-Band satellite channel	
	Tx	Rx	Tx (1625.5 - 1660.5 MHz)	Rx (1525 - 1559 MHz
#1	148 MHz	148 MHz	1.640.505 Hz	1.530.105 Hz
...	...	...	...	...
#6	138 MHz	139 MHz	1.640.550 Hz	1530.220 Hz

Table 3-1: Example of channel mapping in GCU

It is possible to define separate Tx and Rx frequencies for the tactical radio (depending on radio capabilities). All channel configuration is done from the NOC Portal and downloaded to the GCU.

Note The connected radio must be configured with the same channels.

3.2 To start up the system

If you are using the **magnetic mount** for the antenna:

WARNING! **Magnetic fields**. The magnets are dangerous for those wearing pacemakers!
Keep away from the magnets if you wear a pacemaker.

3.2.1 To switch on the system

WARNING! Keep a minimum safety distance of 23 cm to the antenna when the system is powered.

1. Flip the switch to **COVERT** position (center) to switch on the system.

Figure 3-1: Switch on system

When the system is switched on, it goes through a startup sequence.

2. Hold the switch on **OVERT** for a few seconds (max. 20!) to show status LEDs.

CAUTION! If you hold the switch on OVERT for more than 20 seconds the GCU will be zeroized!
After 30 seconds the GCU can no longer be used, and must be manually reactivated from the NOC Portal.

- When the system is initializing, the **PWR** LED is blinking green.
- When the system is ready, the LEDs **PWR**, **TX/RX** and **FAULT** are steady green.

For details on the LEDs, see Table 3-2 on page 3-3.

When the system is ready, it automatically enters receive mode.

Receive and transmit modes

Receive mode:
After the T-TAC system is started up, it automatically enters receive mode. In receive mode, the system actively monitors and converts signals on all the configured channels. The radio must be configured to the correct channel to receive a transmission.

Transmit mode:
The T-TAC actively monitors the defined tactical radio channels for active transmissions from the connected radio. When transmission is detected, the T-TAC switches from receive mode and enters transmit mode. The GCU automatically determines the Radio channel frequency and maps it to the defined L-Band Tx frequency. After transmission is completed, the T-TAC returns to receive mode.

3.3 Use of the radio system

When the radio and the T-TAC are both configured and connected and the system is powered, the T-TAC system does not require any further attention from the user.

Select the radio channel for communication and start the transmission as you would normally do on your radio. The T-TAC automatically detects the channel for transmission and switches between reception and transmission.

3.4 LED functions

Figure 3-2: LEDs on the GCU

The table below shows the LED functions. **See also *Troubleshooting* on page 4-1**.

LED	**PWR**	**TX/RX**	**SYNC**	**FAULT**
Function	Power state	Transmit/Receive state	Synchronization[1]	Fault
Steady Green	All systems operational.	Rx mode (receiving).	Synchronization done. LAN cable connected.	No fault.
Blinking Green	Systems initializing.	Tx mode (transmitting).	Synchronization done. To activate, switch off 10 sec. then back on.	-
Blinking Yellow[2]	-	-	Synchronizing.	GPS fix lost.
Steady Red[2]	System standby (all other LEDs Off).	Input power from the radio is outside range (20 mW to 2 W).	Error/ not configured.	GCU failure.
Blinking slowly[3]	-	-	-	failure.
Blinking fast[3]	-	-	-	Cable failure between GCU and antenna.
Off	Power is off.	Transceiver deactivated.	Synchronization not ongoing, and LAN cable not connected.	-

Table 3-2: LED patterns

1. Synchronization refers to NOC data exchange (Network Operating Center).
2. **All LEDS simultaneously yellow or red**: Zeroization or Factory reset is ongoing! See *To zeroize the system* on page 3-4.
3. Blinking speed:

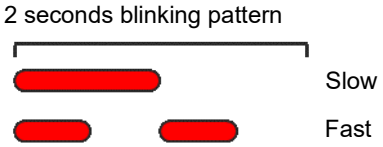

3.5 To test the system

To verify the successful installation of the system:

1. Start up the system as described in the previous section *To start up the system* on page 3-2.
2. Check that the GCU LEDs **PWR**, **TX/RX** and **FAULT** are steady green.
3. Check that the radio is on and connected.
4. Make a test call to another T-TAC system configured to match yours.
5. If verification fails, see *Troubleshooting* on page 4-1.

3.6 To zeroize the system

In extreme situations it may be necessary to zeroize the system, to make it unusable for others.

CAUTION! When you have zeroized the Generic Converter Unit, it can no longer be used!
It can only be reactivated manually using the NOC Portal.

To zeroize the system:

1. Hold the switch on **OVERT** for 30 seconds.

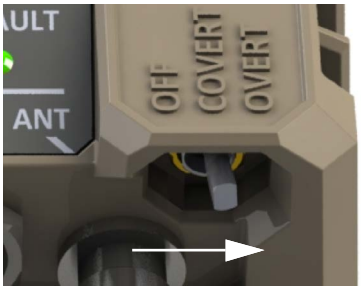

The figure below shows the LED sequence during zeroization:

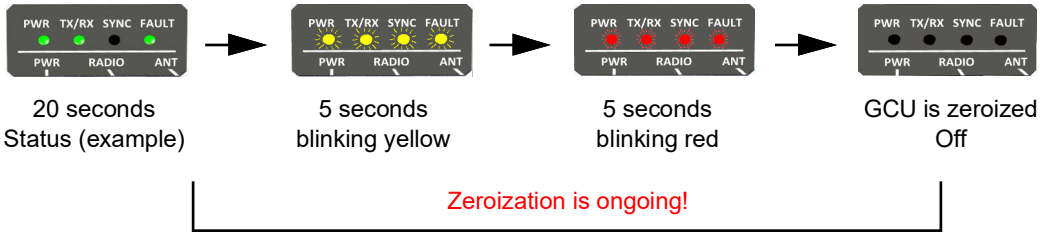

Figure 3-3: Zeroization LED pattern

2. When all LEDs are off you can release the switch. **The GCU is now zeroized** and will reboot.

When the GCU is zeroized, it can only be reactivated manually using the NOC Portal.

3.7 To reset the system to factory default

1. Hold the switch on **OVERT** for 60 seconds.
   While holding the switch on OVERT, after the zeroize LED sequence (described in previous section), the factory reset sequence will start.

Push and hold > zeroization sequence----------> Factory reset sequence

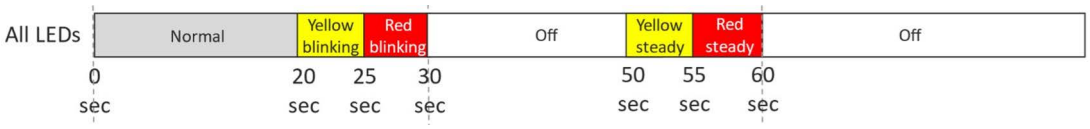

2. When all LEDs are off after the second sequence you can release the switch. The GCU is now factory reset and will reboot.
3. When the GCU is factory reset it must undergo first time configuration to become operational again.

Maintenance and troubleshooting

4.1 Software update of T-TAC

When there is a new software version on the server, the T-TAC will automatically download and install the software when it connects to the server to synchronize.

For details on the synchronization process, see *To synchronize and load the configuration into the GCU* on page 2-2.

4.2 Troubleshooting

Issue	Explanation/Remedy
Cannot receive nor transmit radio calls.	No system power: Check the LEDs (toggle switch to **OVERT**). If no light: check the power cable between GCU and power supply. Channel configuration problem: Check that the RX/TX LED changes to TX (blinking) when transmitting. Ensure the radio is configured according to the channel map. Make sure the sender and receiver are using the same channel.
Antenna fault (**FAULT** LED blinking slowly red).	Restart the system. Check cable between GCU and antenna for correct installation. Check cable for damage and replace if necessary. The cable loss must be max. 10 dB. If the error persists, replace the Antenna.
Antenna cable fault (**FAULT** LED blinking fast red).	Check cable between GCU and antenna for correct installation. Check cable for damage and replace if necessary.The cable loss must be max. 10 dB, for specifications see *Antenna interface (ANT)* on page A-4.
GPS fix lost (**FAULT** LED blinking yellow).	The T-TAC has lost GPS fix. Make sure the antenna has free line of sight to as much of the sky as possible. Wait a few minutes for the T-TAC to obtain GPS fix.

Table 4-1: Troubleshooting selected issues

In general, if an error occurs, you have the following options:

Note For troubleshooting of your radio refer to the documentation for the radio.

- **Check LEDs**
  If an error occurs, first check the LEDs by holding the GCU switch on **OVERT**. Refer to Table 4-1 above and Table 3-2 in the *Operation* chapter for the LED patterns.
- **Check cables and power supply**
  Depending on the LED indications, check all cables for correct installation and/or damage.
  Check that the power supply is functional and is correctly installed.

- **Check configuration**
  If you can connect to the configuration server, synchronize the T-TAC as described in *To synchronize and load the configuration into the GCU* on page 2-2. Check that the SYNC LED shows that the system is synchronized successfully.
  Otherwise you may check the radio configuration against your channel table or other document showing the configuration.
- **Zeroization**
  If you still cannot solve the problem, you can zeroize the GCU, which will reset the GCU to factory settings. See *To zeroize the system* on page 3-4.

CAUTION! When the GCU is zeroized it **does not work** until it is reactivated manually using the NOC Portal!

Additionally, a person with access to the NOC Portal can see error messages from the T-TAC when it is connected to the server.

4.3 Command line interface

The administrator command line interface can be accessed via the GCU LAN interface using SSH. Use the following parameters to connect to the GCU:

- IP address: **192.168.1.88**
- Username: **admin**
- Password (default): <serial number>

Important The system requires a change of the password on first login.

The table below shows the most important commands.

Command	Description
`stage1-set <URL>`	Sets the stage 1 server URL.
`stage1-get`	Shows the currently configured stage 1 server URL.
`status`	Prints the system status of system, such as: • GCU SW version • GCU variant • Antenna SW version • Antenna variant • Cryptographic self-test result
`Syslog`	Prints the system log file since last boot.
`recovery`	Puts the system in recovery mode to allow the manual upload of software.
`passwd`	Changes the password of the admin user.

Table 4-2: Commands for administrator command line interface

Appendices

Specifications

A.1 Vehicular antenna, model 8064A

A.1.1 Antenna specifications, Vehicular antenna

Item	Specifications
Antenna type	Omni-directional L-band antenna.
Satellite services	Supports Yahsat T2, T3 and T4 L-band satellites with bent-pipe 5 kHz and 25 kHz channel bandwidth, in spot beam.
Rx Frequency Band Tx Frequency Band	1525 MHz - 1559 MHz 1626.5 MHz - 1660.5 MHz
GNSS (GPS)	1575 MHz
EIRP (nominal)	6 dBW
Interface to GCU	Connector type: TNC, female, IP68
Dimensions	Diameter: 109 mm, Height: 142 mm
Weight	450 g/ 1.0 lb
Operating temperature	-21°C to +55°C
Storage temperature	-25°C to +80°C
Ingress Protection	IP68
Tested to MIL standards[1]	MIL-STD-461G (EMC) MIL-STD-810H (Environmental)
Tested to Regulatory standards	CE, UKCA, FCC, RCM

Table A-1: Vehicular antenna specifications

1. Tested with M7019-17 DC/DC power supply from Enercon Technologies LTD.

A.1.2 Outline drawing with dimensions, Vehicular antenna

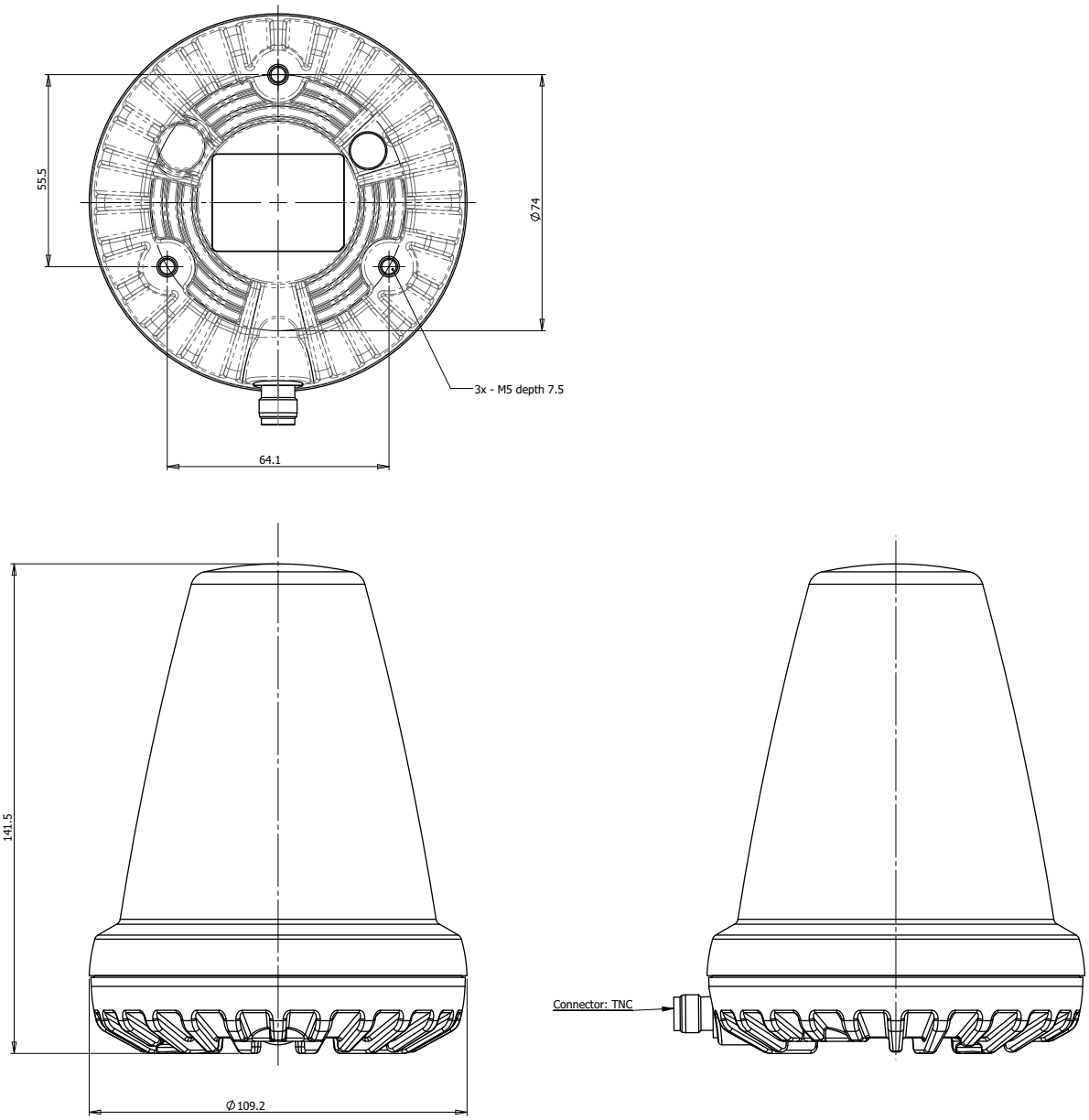

Figure A-1: Outline drawing with dimensions, Vehicular antenna

A.2 GCU, model 8060A

A.2.1 General specifications

Item	Specifications
T-TAC L-band frequency range	Rx 1525 to 1559 MHz Tx 1626.5 to 1660.5 MHz
Dimensions	Height: 38 mm Width: 92 mm Depth: 173 mm (dimensions are including connectors and mounting flange)
Weight	550 g /1.2 lbs
Operating temperature	-21°C to +55°C
Storage temperature	-25°C to +80°C
Ingress Protection	IP68
Power consumption, Typical	Rx mode: 7.2 W Tx mode, 25 kHz: 17 W Tx mode, 5 kHz: 15 W
Power consumption, Peak	Tx mode: 25 W
Encryption	Any encryption on the radio interface is maintained over the satellite link. The connection between the T-TAC and the Network Operation Center/server uses TLS 1.2 and 1.3 cryptographic protocols.
Tested to MIL standards[1]	MIL-STD-461G (EMC) MIL-STD-810H (Environmental engineering and test)

Table A-2: GCU general specifications

1. Tested with M7019-17 DC/DC power supply from Enercon Technologies LTD.

A.2.2 Interface specifications

Specifications of the interfaces on the GCU.

Interface	Specifications
Power input (PWR) 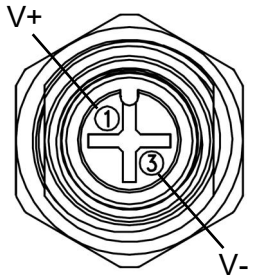 	• Connector type: M12 connector, female, IP68. • DC input range: 12-28 VDC nominal (max. range 8-32 VDC). • Peak power consumption: Max. 25 W. • 1 m power cable is included, open-ended towards the power supply/battery.
Radio interface (RADIO)	• Connector type: BNC, female. • Input frequency range 50 to 500 MHz. • Tx Input power: min. 20 mW and max. 2 W.[1] • Cable length: 6 m standard, up to 100 m depending on the cable type. • Max cable loss: 10 dB at 500 MHz. • VHF/UHF Radio channels must be within an arbitrary max 40 MHz wide range from 50 MHz to 500 MHz.
Antenna interface (ANT)	• Connector type: TNC, female, IP68. • Cable length: 1 m standard, up to 100 m depending on the cable type. • Max cable loss 10dB at 1.5 to 1.7 GHz and max DC resistance 1 Ohm in center conductor + screen.
LAN	• Connector type: RJ-45, with circular metal housing, IP68. • 10/100BaseT. Used for configuration only.

Table A-3: GCU interface specifications

1. If the output power of the Tactical Radio can exceed 2 W, insert a suitable external attenuator between the radio and the GCU.

A.2.3 Outline drawing with dimensions, GCU

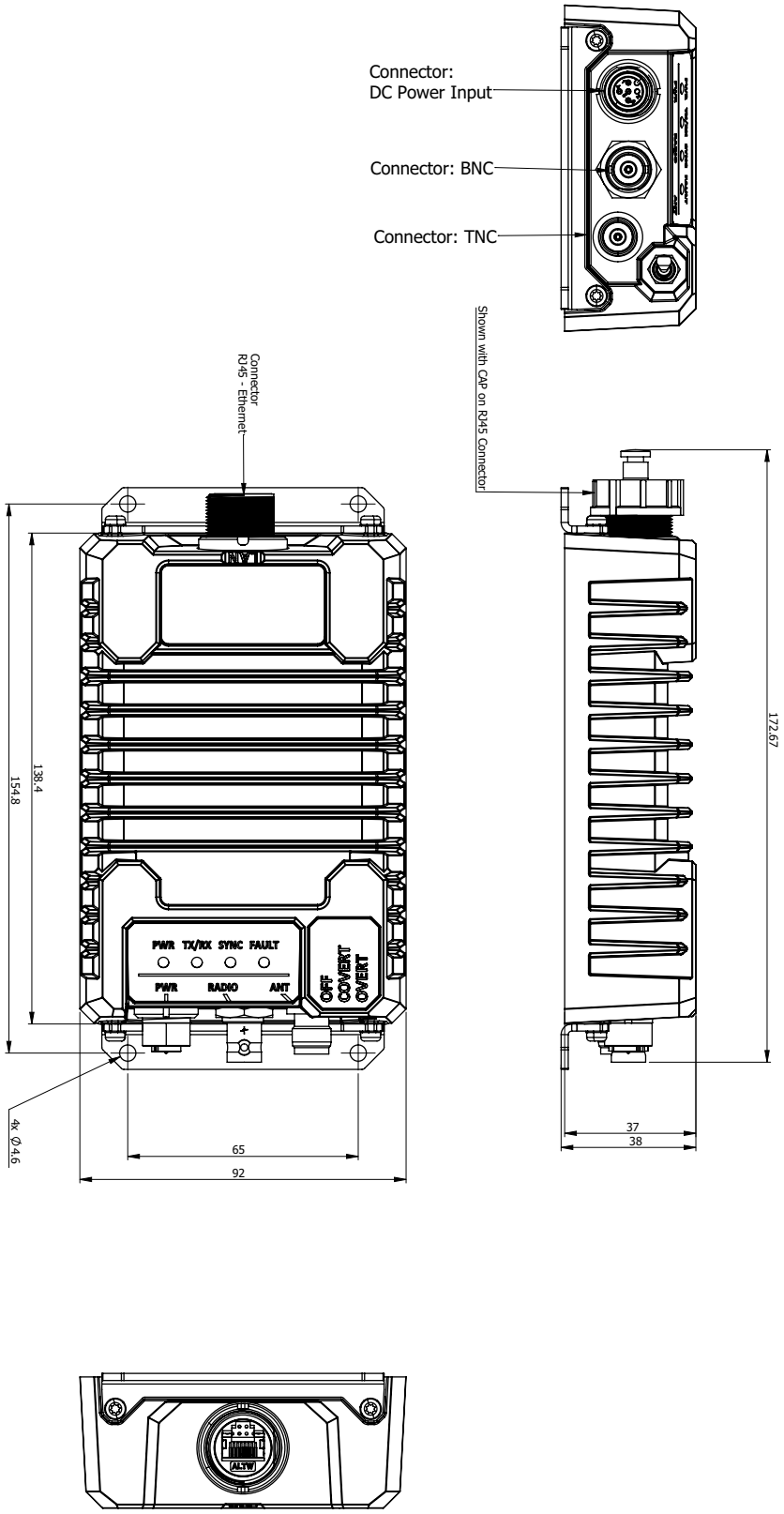

Figure A-2: Outline drawing with dimensions, Generic Converter Unit

Recommended power supply

B.1 Specifications for M7019-17

The Enercon power supply **M7019-17** meets the power supply requirements of the Vehicular T-TAC.

The table below lists the specifications for the M7019-17 Power Supply.

Note Specifications are subject to change without prior notice by the manufacturer.

Item	Specification
Power input 24 VDC or 28 VDC	PSU input protection • Under-voltage lockout if input voltage is below 16 VDC +/- 1 VDC. • Over-voltage lockout if voltage > 53 VDC+/-1 VDC • Reverse polarity protection
DC input protection	MIL-STD-1275E
Power output to GCU	24 VDC 1.2 A
Size	82.8 mm x 46.5 mm x 18.2 mm
Weight	134 g
Environmental conditions	Designed to meet MIL-STD-810G
Temperature	Method 501.5 & 502.5
Operating	-55°C to +85°C (at the baseplate)
Storage	-55°C to +125°C (ambient)
Altitude	Method 500.5 Up to 70,000ft.
Humidity	Method 507.5 Up to 95% RH

Table B-1: M7019-17 Power Supply, specifications

Item	Specification
Vibration	Method 514.6 Category 7: Aircraft - Jet, IAW figure C-6, 13.7 grams, 1 hour per axis. Category 24: Minimum integrity, IAW figure E-3, 7.7 grams, 1 hour per axis.
Shock	Method 516.6 Operational shock: 30 g, 11 ms, half-sine. Crash safety: 100 g, 6 ms, half-sine.
Salt Fog	Method 509.5
EMC	MIL-STD-461F
EMC standards	Designed to meet MIL-STD-461F with 5 μ-H LISN, shielded harness and static resistive load. CE101, CE102, CS101, CS114, CS115, CS116, RE101, RE102, RS101, RS103
Reliability (MTBF)	150,000 hours, calculated per MIL-STD-217F Notice 2 at +85°C baseplate, Ground Fix environment.

Table B-1: M7019-17 Power Supply, specifications (Continued)

B.1.1 Connection to M7019-17

The connector on the M7019-17 power supply has the following pin assignments.

Pin no.	Function	
1	Output	+
2	Sense	+
3	Sense Rtn	-
4	Output Rtn	-
5	Output Rtn	-
6	Input Rtn	-
7	Input	+
8	Inhibit	+

Pin no.	Function	
9	Output	+
10	Output	+
11	Output	+
12	Output Rtn	-
13	Output Rtn	-
14	Input Rtn	-
15	Input	+

Table B-2: Pin assignments on M7019-17 power supply

The connector is a DSUB-15 male (M24308/24-38F or equal).

Mating connector: DSUB-15 female: M24308/2-2F or equal.

For suggested cable, see cable drawing in Figure B-1 below.

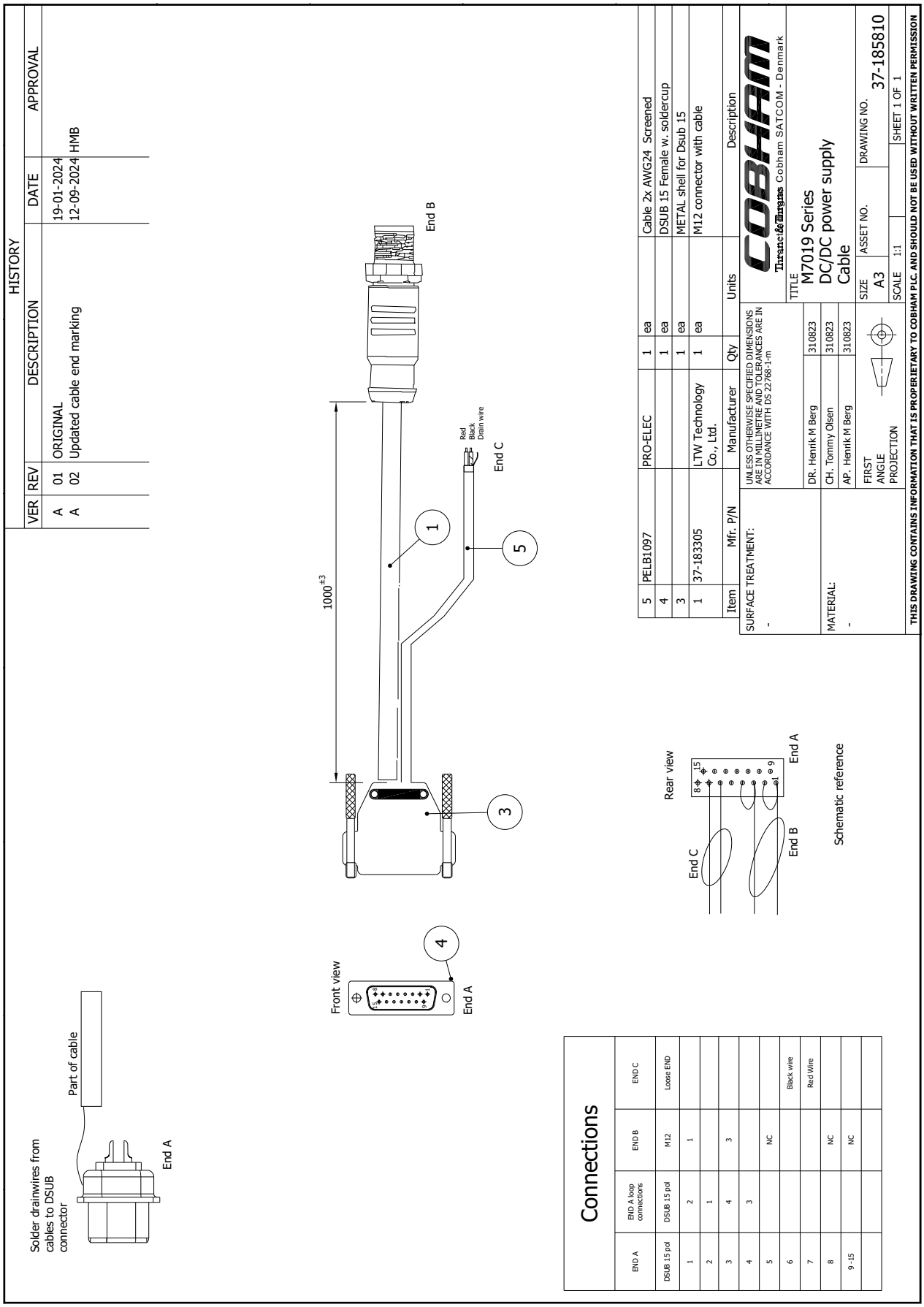

Figure B-1: Example cable for M7019-17 power supply

B.1.2 Outline drawing for M7019-17 Power Supply

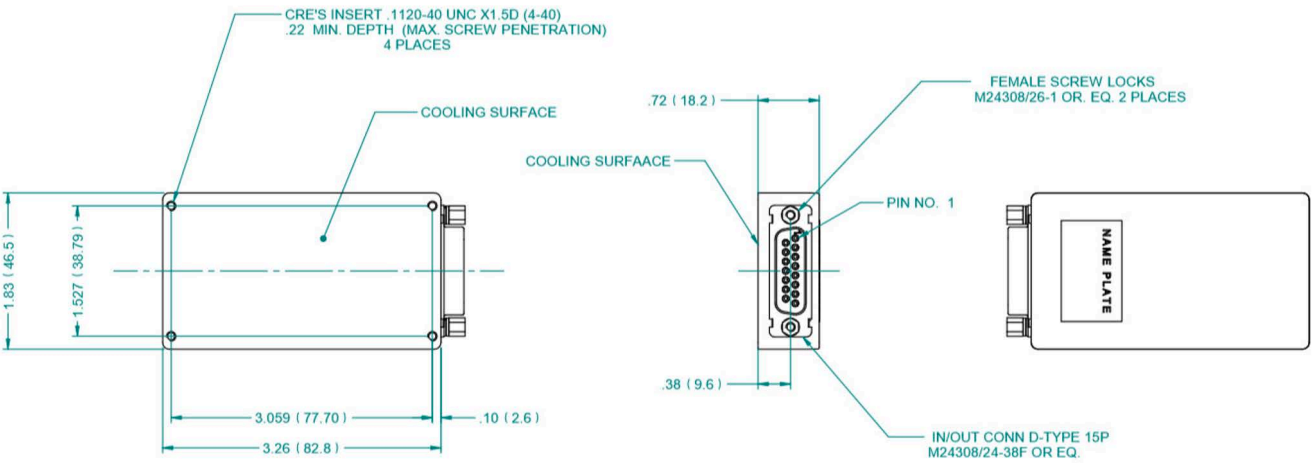

Notes

1. Dimensions are in inches [mm]
2. Tolerance is:
   .XX ± 0.02 in
   .XXX ± 0.010 in
3. Weight: 134 g

Figure B-2: Outline drawing for for M7019-17 Power Supply

Conformity

Certificates of approval will be available in partnerportal.cobhamsatcom.com, or from your supplier.

C.1 EU (CE)

The Tactical Radio Extender (T-TAC) is CE certified as stated in the Declaration of Conformity.

C.2 UKCA

The Tactical Radio Extender (T-TAC) is UKCA certified as stated in the Declaration of Conformity.

C.3 MIL approvals

The Tactical Radio Extender (T-TAC) is approved to the following MIL standards:

- MIL-STD-810
- MIL-STD-463

C.4 RCM, Australia

The Tactical Radio Extender (T-TAC) is RCM certified as stated in the “Certificate/ Declaration of Conformance RCM”.

C.5 FCC

FCC e-label:

Yahsat T-TAC Vehicular

P/N: 408064A-41000

FCC ID: ROJ-8064A

This device complies with FCC 47 CFR Part 25 and Part 15 subpart B Class A.

Note: This equipment has been tested and found to comply with the limits for a Class A digital device, pursuant to part 15 of the FCC Rules. These limits are designed to provide reasonable protection against harmful interference when the equipment is operated in a commercial environment. This equipment generates, uses and can radiate radio frequency energy and, if not installed and used in accordance with the instruction manual, may cause harmful interference to radio communications. Operation of this equipment in a residential area is likely to cause harmful interference in which case the user will be required to correct the interference at his own expense.

NOTICE:

This device complies with part 15 of the FCC rules. Operation is subject to the following two conditions:

(1) this device may not cause harmful interference, and

(2) this device must accept any interference received, including interference that may cause undesired operation.

NOTICE:

Changes or modifications made to this equipment not expressly approved by Cobham Satcom may void the FCC authorization to operate this equipment.

Glossary

A

ANT	Antenna

B

BLOS	Beyond Line of Sight
BNC	Bayonet Neill–Concelman. A miniature quick connect/disconnect radio frequency connector used for coaxial cable.
BW	Bandwidth

E

EMC	Electromagnetic Compatibility

G

GNSS	Global Navigation Satellite System. A satellite navigation system with global coverage. Examples are GPS, GLONASS, Galileo or Beidou.
GPS	Global Positioning System. A system of satellites, computers, and receivers, that is able to determine the latitude and longitude of a receiver on Earth by calculating the time difference for signals from different satellites to reach the receiver.

H

HPA	High Power Amplifier

I

IP	Ingress Protection

L

LAN	Local Area Network
LED	Light-Emitting Diode
LNA	Low Noise Amplifier
LOS	Line of Sight

N

NOC	Network Operating Center.

P

PWR	Power

R

RF	Radio Frequency
RX	Receive

S

SYNC	Synchronization. In this context it means synchronization between the NOC and the GCU.

T

TLS	Transport Layer Security
TNC	Threaded Neill–Concelman. A threaded version of the BNC connector.
T-TAC	Thuraya Tactical Radio Extender
TX	transmit

U

UHF	Ultra High Frequency

V

VDC	Volt DC (Direct Current)
VHF	Very High Frequency

Index

A

About the T-TAC 1-1
antenna
  connect 2-8
  dimensions and weight A-1
  installation 2-4
approvals C-1
authentication 2-2

C

compliance C-1
configuration 2-2
  initial 2-2
conformity C-1
connectors
  antenna 2-8
  overview 1-5
  power 2-10
  radio 2-9
contents of delivery 2-1

D

DC/DC power supply
  recommended B-1
dimensions
  drawings A-2, A-5
dimensions and weight
  antenna A-1
  Generic Converter Unit A-3
documents, related .....-iv

F

features 1-2

G

Generic Converter Unit
  dimensions and weight A-3
  installation 2-7
  specifications A-3

I

Ingress Protection (IP grade) A-3
initial configuration 2-2
interface specifications, GCU A-4

L

LED
  functions 3-3
  overview 1-5

O

operating temperature A-1, A-3
outline drawings A-2, A-5

P

power consumption, typical A-3
Power supply
  recommended B-1
Power supply M7019-17 (recommended ...B-1
power, connect 2-10

R

radio, connect 2-9

S

safety summary .....-ii
software update 4-1
Specifications
  recommended power supply B-1
specifications A-1
  Generic Converter Unit A-3
storage temperature A-1, A-3
switch
  functions 1-5
switch on 3-2

T

temperature
  operating A-1, A-3
  storage A-1, A-3
test, initial 3-4
troubleshooting 4-1
T-TAC
  system overview 1-2
typography used in this manual .....-iv

U

update software 4-1

W

weight and dimensions
antenna A-1
Generic Converter Unit A-3