Yahsat Tactical Radio Extender Aeronautical

Installation and user manual

Document number: 98-186129-DraftC02

Release date: March 11, 2025

Disclaimer

Any responsibility or liability for loss or damage in connection with the use of this product and the accompanying documentation is disclaimed by Thrane & Thrane A/S. The information in this manual is provided for information purposes only, is subject to change without notice and may contain errors or inaccuracies. Manuals issued by Thrane & Thrane A/S are periodically revised and updated. Anyone relying on this information should acquire the most current version e.g. from the partner portal at partnerportal.cobhamsatcom.com, or from the distributor. Thrane & Thrane A/S is not responsible for the content or accuracy of any translations or reproductions, in whole or in part, of this manual from any other source. In the event of any discrepancies, the English version shall be the governing text.

Thrane & Thrane A/S is trading as Cobham Satcom.

Copyright

© 2025 Thrane & Thrane A/S. All rights reserved.

Manufacturer address

Thrane & Thrane A/S, Lundtoftegårdsvej 93D, DK-2800, Kgs. Lyngby, Denmark

Disposal

Old electrical and electronic equipment marked with this symbol can contain substances hazardous to human beings and the environment. Never dispose these items together with unsorted municipal waste (household waste). In order to protect the environment and ensure the correct recycling of old equipment as well as the re-utilization of individual components, use either public collection or private collection by the local distributor of old electrical and electronic equipment marked with this symbol.

Contact the local distributor for information about what type of return system to use.

Safety summary

The following general safety precautions must be observed during all phases of operation, service and repair of this equipment. Failure to comply with these precautions or with specific warnings elsewhere in this manual violates safety standards of design, manufacture and intended use of the equipment. Thrane & Thrane A/S assumes no liability for the customer's failure to comply with these requirements.

Keep away from the antenna
The antenna for the Yahsat Tactical Radio Extender (T-TAC) system emits radio frequency energy when switched on. To avoid injury, keep a minimum safety distance of 22 cm from the antenna.

Do not operate in an explosive atmosphere
Do not operate the equipment in the presence of flammable gases or fumes. Operation of any electrical equipment in such an environment constitutes a definite safety hazard.

Do not substitute parts or modify equipment
Because of the danger of introducing hazards, do not substitute any parts or perform any unauthorized modification to the equipment.

Power supply
The T-TAC Aero GCU must be powered from a stable, MIL-STD-704, 24 VDC or 28 VDC power supply. See *Recommended power supply* on page B-1.

Service
User access to the interior of the system units is prohibited. Only a technician authorized by Cobham Satcom may perform service - failure to comply with this rule will void the warranty.

Keep away from live circuits
Operating personnel must not remove equipment covers. Do not replace components with the power cable connected. Under certain conditions, dangerous voltages may exist even with the power cable removed. To avoid injuries, always disconnect power and discharge circuits before you touch them.

Install and use the T-TAC with care
Thrane & Thrane A/S assumes **no liability** for any damage caused by the antenna falling off or stressing the mounting base. It is the responsibility of the customer to ensure a safe and correct installation of the antenna. The instructions in the Installation manual are only guidelines.

WARNING! The antenna installation must be in accordance with the aircraft manufacturer.

WARNING! Only skilled persons may install the T-TAC.

Failure to comply with the rules above will void the warranty!

About this manual

Intended readers

This is an installation and user manual for the T-TAC, intended for installers of the system, service personnel and users.

Personnel installing or servicing the system must be properly trained. It is important that you observe all safety requirements listed in the beginning of this manual, and install the system according to the guidelines in this manual.

Manual overview

This manual has the following chapters and appendices:

- *Introduction*
- *Installation*
- *Operation*
- *Maintenance and troubleshooting*
- *Specifications*
- *Conformity*

Related documents

The below list shows the documents related to this manual and to the T-TAC system.

Refer to the NOC Portal or the *Cobham SYNC Partner Portal* for additional documentation, tech notes etc.

Title and description	Document number
Tactical Radio Extender, Quick Start Guide	98-183372
T-TAC NOC Portal Manual	98-184012
Security Policy, Yahsat T-TAC	99-183000
T-TAC Yahsat Provisioning Instructions	95-187527

Table 0-1: Related documents

Typography

In this manual, typography is used as indicated below:

Bold is used for the following purposes:

- To emphasize words.
  Example: “Do **not** touch the Generic Converter Unit during transmission”.
- To indicate what the user should select or do.
  Example: “Flip the switch to **COVERT**”.

Italic is used to emphasize the paragraph title in cross-references.

Example: “For further information, see *Connecting Cables* on page...”.

Table of contents

Chapter 1 Introduction

1.1 What is T-TAC? 1-1
1.2 The T-TAC system units 1-4

Chapter 2 Installation

2.1 What's in the box 2-1
2.2 Before installation 2-2
2.3 Installation 2-4
2.4 Electrical installation and wiring 2-7

Chapter 3 Operation

3.1 Before use 3-1
3.2 To start up the system 3-2
3.3 Use of the radio system 3-3
3.4 LED functions 3-3
3.5 To test the system 3-4
3.6 To zeroize the system 3-4
3.7 To reset the system to factory default 3-5

Chapter 4 Maintenance and troubleshooting

4.1 Software update of T-TAC 4-1
4.2 Troubleshooting 4-1
4.3 Command line interface 4-2

Appendix A Specifications

A.1 Aeronautical antenna, model 8066A A-1
A.2 Aero HLD, model 8067A A-4
A.3 Aero GCU, model 8068A A-6

Appendix B Recommended power supply

B.1 Specifications for M7019-17 ..... B-1

Appendix C Conformity

C.1 EU (CE) C-1
C.2 UKCA C-1
C.3 MIL approvals C-1
C.4 RCM, Australia C-1
C.5 FCC C-2

Glossary Glossary-1

Index Index-1

List of Figures

Chapter 1 Introduction

Figure 1-1: Aeronautical connection example 1-2
Figure 1-2: Satellite antenna for aeronautical use, model 8066A 1-4
Figure 1-3: Aero HLD 1-5
Figure 1-4: Switch, LEDs and connectors on Generic Converter Unit 1-6
Figure 1-5: LEDs 1-6

Chapter 2 Installation

Figure 2-1: LAN interface for configuration. 2-2
Figure 2-2: Synchronization process in LEDs 2-3
Figure 2-3: Installation overview 2-4
Figure 2-4: Aero HLD installation 2-5
Figure 2-5: Aero GCU installation 2-6
Figure 2-6: Wiring aeronautical T-TAC 2-7

Chapter 3 Operation

Figure 3-1: Switch on system 3-2
Figure 3-2: LEDs on the Aero GCU 3-3
Figure 3-3: Zeroization LED pattern 3-4

Chapter 4 Maintenance and troubleshooting

Appendix A Specifications

Figure A-1: Specifications for Aero antenna 8066A A-2
Figure A-2: Outline drawing with dimensions, Aero HLD A-5
Figure A-3: Outline drawing with dimensions, Generic Converter Unit A-8

Appendix B Recommended power supply

Figure B-1: Example cable for M7019-17 power supply B-3
Figure B-2: Outline drawing for for M7019-17 Power Supply B-4

Appendix C Conformity

List of tables

Table 0-1: Related documents iii

Chapter 1 Introduction

Chapter 2 Installation

Table 2-1: RF cable between Aero GCU and Aero HLD 2-8
Table 2-2: RF cables between Aero HLD and antenna 2-9

Chapter 3 Operation

Table 3-1: Example of channel mapping in Aero GCU 3-1
Table 3-2: LED patterns 3-3

Chapter 4 Maintenance and troubleshooting

Table 4-1: Troubleshooting selected issues 4-1
Table 4-2: Commands for administrator command line interface 4-2

Appendix A Specifications

Table A-1: Aero HLD general specifications A-4
Table A-2: Aero GCU general specifications A-6
Table A-3: Aero GCU interface specifications A-7

Appendix B Recommended power supply

Table B-1: M7019-17 Power Supply, specifications B-1
Table B-2: Pin assignments on M7019-17 power supply B-2

Appendix C Conformity

Chapter 1

Introduction

1.1 What is T-TAC?

T-TAC, or Yahsat Tactical Radio Extender, is a communication solution for military and emergency response teams. It seamlessly converts a VHF or UHF tactical radio channel to satellite L-band transmission, expanding the Line-Of-Sight (LOS) of existing in-service VHF/UHF radios to Beyond-Line-Of-Sight (BLOS) satellite communications.

The T-TAC hardware consists of a small Generic Converter Unit (Aero GCU), an Aero HLD amplifier and an omni-directional L-band antenna from Sensor Systems.

The Aero GCU converts the UHF/VHF radio's 5 or 25 kHz BW waveform to L-Band. The Aero GCU is connected to the Aero HLD amplifier and the omni-directional L-band antenna.This antenna provides LHCP and RHCP Satcom communications in one package. The small aerodynamic blade is optimized for both rotor wing and fixed wing installations.

The T-TAC system comes in four variants: ManPack, Vehicular, Maritime and Aeronautical.

This manual is for the **Aeronautical** variant.

Service is implemented using bent pipe through a Thuraya satellite L-band uplink and downlink. This provides users with a similar experience as traditional satellite communication, but through a dedicated 5 or 25 kHz BW satellite channel. Since the system directly links L-band uplink and downlink signals, no ground infrastructure is needed to support the service. The service is operational in the Thuraya 2 and 3 satellite coverage areas and the next generation Thuraya 4 satellite footprint as well.

With its innovative and highly secure technology, the T-TAC provides reliable radio communications, even in the most remote and challenging environments.

1.1.1 Overview of a T-TAC system

The example below shows a basic T-TAC system for Aeronautical use.

The T-TAC system consists of a small Generic Converter Unit (Aero GCU), an Aero HLD amplifier and an omni-directional L-band antenna.

The system connects to a tactical VHF/UHF radio and a MIL-STD-704 DC/DC power supply.

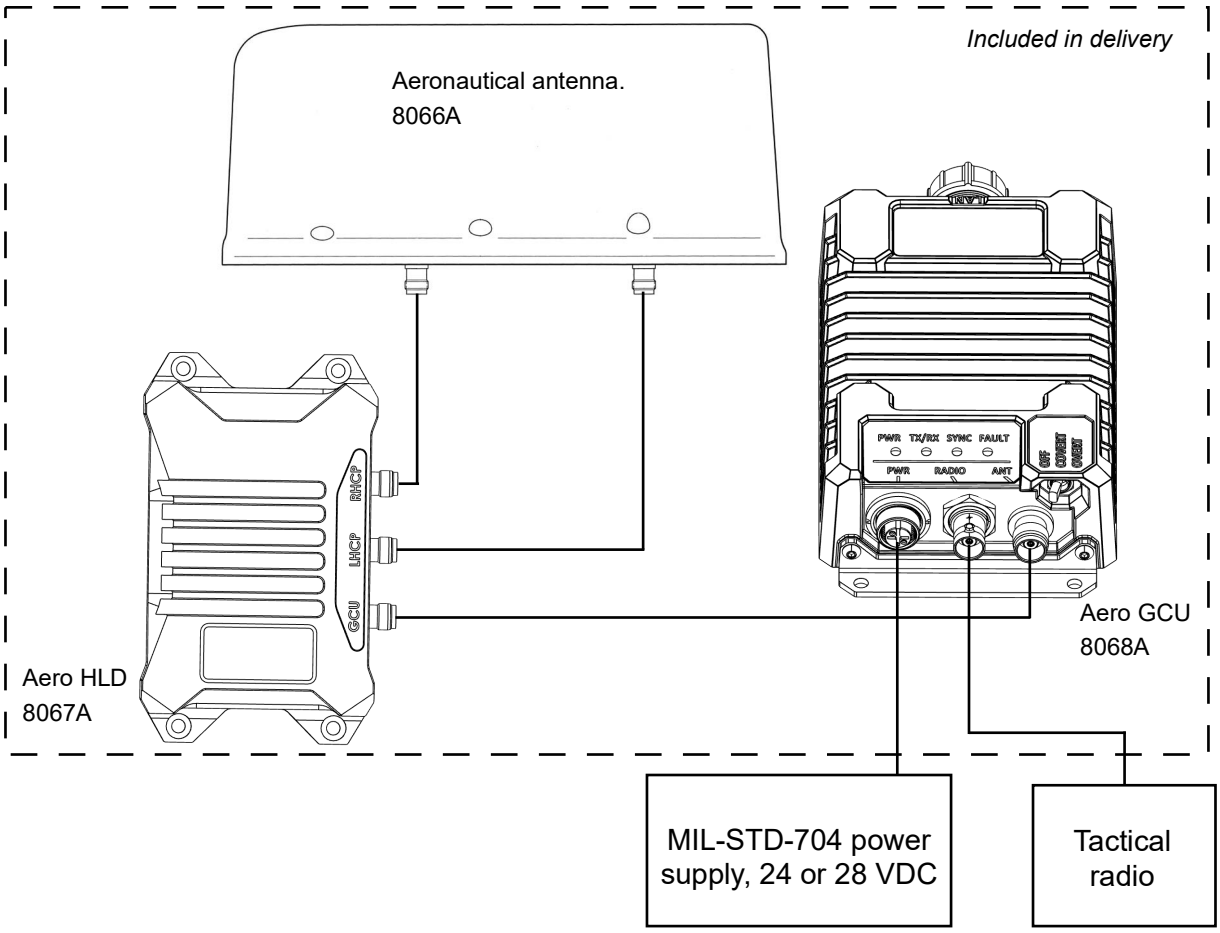

Figure 1-1: Aeronautical connection example

1.1.2 Features and interfaces

The T-TAC has the following features and interfaces:

- Small antenna for connecting to the Thuraya L-band satellite network.
- Optimized for use with existing VHF/UHF radio systems.
- Keeps existing security level in radio communication.
- Encrypted secure transfer of configuration from Network Operating Center (NOC)
- Complies with military standards
- Small and light-weight system
- Ethernet port for configuration
- The Aeronautical T-TAC supports fixed wing aircraft up to 900 km/h and rotory wing aircraft up to 400 km/h.

1.1.3 Configuration

Configuration of the T-TAC system

The administrator of your T-TAC system prepares the system configuration on the server, using the NOC Portal (Network Operating Center). Description and guidance for the NOC Portal is not part of this manual. You find this information in the *T-TAC NOC Portal Manual*.

When the T-TAC connects to the closed network for the first time, it will authenticate and contact the server to get its configuration. For details, see *Configuration* on page 2-2.

Configuration of the connected radio

1. Make sure the radio system meets the requirements in the specifications in *Radio interface (RADIO)* on page A-7,
2. Configure the radio system to match the configuration parameters set up for your T-TAC system in the NOC Portal (channel numbers, frequencies etc.).

1.2 The T-TAC system units

This is a short description of the units in the T-TAC system.

Note

For mechanical installation, see *Installation* on page 2-4.

For wiring and cable requirements, see *Electrical installation and wiring* on page 2-7.

1.2.1 The Aeronautical antenna, model 8066A

The omnidirectional antenna unit is a passive unit developed by Sensor Systems Inc and is optimized for both rotor wing and fixed wing installations. The antenna provides LHCP satellite interface to Yahsat satellite network and RHCP GPS interface in one package.

To have line of sight to the satellites, the antenna should be mounted without any obstacles that can block the satellite signal. The antenna connects to the interface connectors on the Aero HLD through two low loss RF cables.

Connectors:

1. **LHCP** on antenna: Connects to the **LHCP** connector on the 8067A Aero HLD.
2. **RHCP** on antenna: Connects to the **RHCP** connector on the 8067A Aero HLD.

Figure 1-2: Satellite antenna for aeronautical use, model 8066A

1.2.2 The Aero HLD, model 8067A

The Aero HLD contains High Power Amplifier, Low Noise Amplifier and Diplexer in one unit. The unit is an active unit with a high-power amplifier (HPA) for transmitting the L-Band satellite signals, a low noise amplifier (LNA) for receiving and a Diplexer Rx/Tx filter that is connected to the 8066A antenna **LHCP** L-band I/O interface. The Aero HLD also contains a GPS 1575 MHz LNA and filter unit connected to the external 8066A antenna **RHCP** output. The Aero HLD connects to the **ANT** interface on the GCU through a coax cable, which carries the Rx/Tx L-band signal, 28 V power to the Aero HLD and a 2 MHz RF modem connection UART signal that enables the GCU to control the Aero HLD functionality.

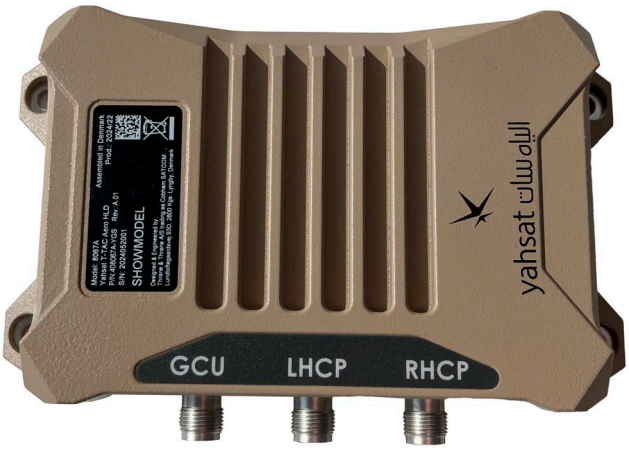

Figure 1-3: Aero HLD

Connectors:

1. **GCU**: Connects to the **ANT** connector on the 8068A Aero GCU .
2. **LHCP**: Connects to the **LHCP** connector on the 8066A antenna.
3. **RHCP**: Connects to the **RHCP** connector on the 8066A antenna .

1.2.3 The Generic Converter Unit (Aero GCU), model 8068A

The Aero GCU contains all system configuration and handles channel detection and conversion in the T-TAC system.

The figure below shows the connectors, switch and LEDs on the unit.

Figure 1-4: Switch, LEDs and connectors on Generic Converter Unit

Connectors:

1. **PWR** (12 - 28 VDC): Input from MIL-STD-704 DC supply.
2. **RADIO**: Connects to a tactical radio
3. **ANT**: Connects to the Aero HLD amplifier.

> **CAUTION!** Do not connect the Aeronautical antenna directly to the Aero GCU - it must be connected via the Aero HLD.

4. **LAN**: Ethernet interface, connects to a closed network for configuration.

Switch:

1. **OFF**: The system is switched off.
2. **COVERT**: The system is switched on in Covert mode (all LEDs are off).
3. **OVERT**: Two functions:
   - Hold the switch on OVERT for max. 20 seconds to see the status in the LED panel. When you let go of the switch it falls back to Covert mode.
   - Hold the switch on OVERT for 30 seconds to zeroize the Aero GCU.

Light indicators (LEDs):

Figure 1-5: LEDs

1. **PWR**: Status of the DC power input.
2. **TX/RX**: Send/receive status.
3. **SYNC**: Synchronization status (with NOC Portal).
4. **FAULT**: Fault in GCU, Aero HLD, cable or GPS reception.

For details of the LED functions, see *LED functions* on page 3-3.

Installation

2.1 What's in the box

Included

The following items are included in the delivery of your Aeronautical T-TAC:

- Aero GCU 8068A
- Aero HLD 8067A
- Aeronautical antenna unit 8066A.
- Power cable, 1 m (open-ended towards the power supply).
- Quick Start Guide.

Not included

In order to use your Aeronautical T-TAC system you must supply the following equipment as a minimum:

- A radio. See specifications in *Radio interface (RADIO)* on page A-7.
- RF cables. For cable requirements, see *Electrical installation and wiring* on page 2-7.
- Ethernet cable (for synchronizing with the configuration server).
- MIL-STD-704 DC power supply (24 or 28 VDC). See specifications in *Power input (PWR)* on page A-7. For recommended power supply, see *Recommended power supply* on page B-1.
- Parts for mounting the T-TAC system units (screws etc.).

2.2 Before installation

2.2.1 Configuration

Before installation, the administrator of your T-TAC system must prepare the system configuration on the server, using the NOC Portal.

Note The configuration of the radio must match the configuration in the NOC Portal.

Some of the configuration parameters set up in the NOC Portal are:

- VHF/UHF frequencies
- VHF/UHF channel width
- L-Band frequencies
- Satellite in use
- Channel mapping profiles
- Software version

To transfer the configuration parameters to the T-TAC, you must connect the Aero GCU to the configuration server, using the LAN interface.

2.2.2 NOC specific configuration and provisioning

For the T-TAC to be able to connect to the Network Operation Center (NOC), the NOC address and certificate bundle must be installed on the device. First time NOC configuration is done through the administrator command line interface.

Yahsat will take care of provisioning and identifying each T-TAC, so that it is recognized when it is later connected to the network for configuration or software update.

For details on NOC specific configuration and provisioning, see *TTAC Yahsat Provisioning Instructions*, doc. no. 95-187527.

2.2.3 To synchronize and load the configuration into the Aero GCU

Note The system (Antenna, Aero HLD and Aero GCU) must be connected while synchronizing the configuration!

Once the T-TAC is provisioned and the configuration is ready in the NOC Portal, you can load the configuration into the Aero GCU using the LAN interface.

Figure 2-1: LAN interface for configuration.

Do as follows:

1. Connect the Aero HLD to the **ANT** connector on the Aero GCU as described in *To connect the Aero HLD to the Antenna* on page 2-9.
2. Connect the antenna to the Aero HLD as described in *To connect the Aero HLD to the Antenna* on page 2-9.

3. Connect power as described in *To connect the Aero GCU to the power supply* on page 2-7.
4. Connect a standard Ethernet cable between the LAN connector on the Aero GCU and the device connecting to the configuration server.[1]
5. Flip the switch from OFF to **COVERT** to switch on the Aero GCU.
   When the Aero GCU is turned on, it will automatically search for the configuration server.
6. Once the network is found, and the Aero GCU has been identified as an authenticated and provisioned unit, the Aero GCU starts synchronizing and getting its dedicated configuration.
   If a software update is available on the server, the new software version is also installed.

   Note If it is only a synchronization, this process takes a few seconds. If it is also a software update, it takes longer. You can follow the process in the LEDs.

   To follow the progress of the synchronization process, hold the switch on **OVERT** for a few seconds, **less than 20 seconds**[2].

Figure 2-2: Synchronization process in LEDs

   The LED marked **SYNC** will show the status. See Table 3-2, *LED patterns*, on page 3-3 for a description of the LED functions.
7. When the SYNC LED starts blinking green, power cycle the Aero GCU (switch off, then on again).
8. When the **SYNC** LED turns steady green, synchronization is done, and you can remove the LAN cable.

The system is now ready for use.

Important Remember to update the radio system to the same configuration as the T-TAC.

2.2.4 Interference

Radios: Radios using the same Rx/Tx frequencies must be placed **min. 10 m apart**, to avoid direct radio to radio interference leaking.

Satellite antennas: The T-TAC anenna must be placed **min. 1 m** from other T-TAC, GPS or L-band antennas to avoid interference.
If the existing GPS antenna on board the aircraft does not provide sufficient filtering of the satcom antenna signal to give a usable GPS signal, you must replace the existing GPS antenna with a GPS antenna that has a satcom filter.

1. The device connecting to the configuration server can be either a device connected on ground or a satellite terminal connecting over satellite, depending on your system configuration.
2. If you hold the switch on OVERT for more than 20 seconds, you will **zeroize the Aero GCU,** which will make it unusable! See *To zeroize the system* on page 3-4.

2.3 Installation

2.3.1 Installation overview

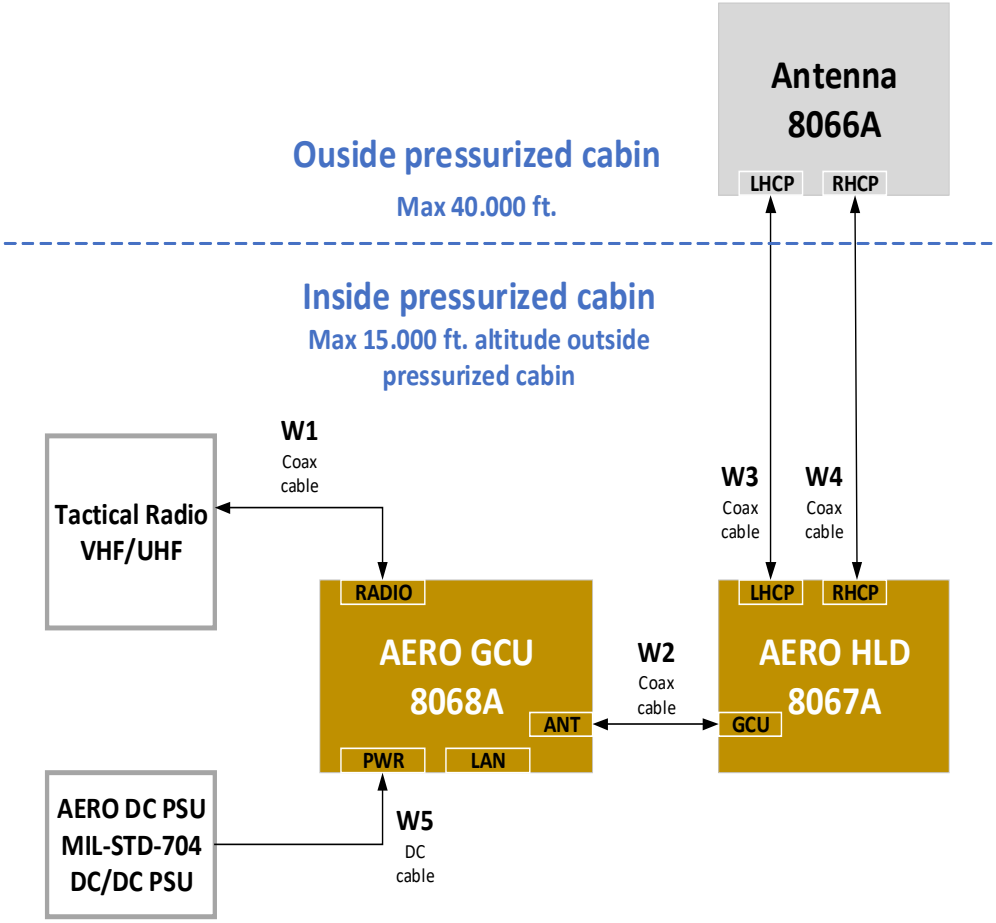

Figure 2-3: Installation overview

2.3.2 To install the antenna on the aircraft

For best performance, mount the antenna with free line of sight in all directions (no blocking objects).

We recommend to keep the cable length between Aero HLD and antenna as short as possible to minimize cable loss.

Do not bend the cables to a radius smaller than the minimum bend radius stated for the cables.

For details on installation, refer to the aircraft manufacturer. For specifications and outline dimensions drawing, see *Aeronautical antenna, model 8066A* on page A-1.

Note For latest updated specifications and outline drawing, refer to the antenna manufacturer, Sensor Systems Inc.

Note for use on helicopter:

When the Aero antenna is mounted below a helicopter rotor, the received and transmitted RF signal will be exposed to fading due to blocking of the incident wave during passing of the rotor blades. The antenna's mounting position and its angle towards the satellite will influence the amount of fading experienced on the received RF signal.

The helicopter rotor blocks the signal and gives a type of fading that can make it difficult to receive some waveforms that are not designed to be robust against this type of fading. Cobham Satcom recommends testing that the desired waveform is robust against helicopter fading before mounting the T-TAC antenna unit.

2.3.3 To install the Aero HLD in the aircraft

To mount the Aero HLD:

1. Install the Aero HLD in a temperature-controlled and pressurized area inside the aircraft. If the aircraft does not fly above 15,000 feet, the Aero HLD unit can be mounted outside pressurized areas in the aircraft.
2. Place the Aero HLD unit close to the top-mounted satcom antenna to minimize the cable length. Place the Aero HLD preferably between the fuselage ribs in the cabin ceiling. In this location there may be a risk of reduced heat dissipation, so make sure that the Aero HLD can dissipate the heat to the aircraft structure.
3. Place the Aero HLD with as much free space around it as possible to keep the temperature down and optimize performance.
4. Based on Figure 2-4 below, calculate and mark up the position of the mounting holes to be drilled.
5. Drill the 4 holes.
6. Ground the Aero HLD through minimum 1 of the 4 threaded mounting holes.
7. Add a serrated washer at the bolt head and apply Loctite 243 on each bolt before mounting the Aero HLD with the washers and bolts.
8. Tighten the screws.

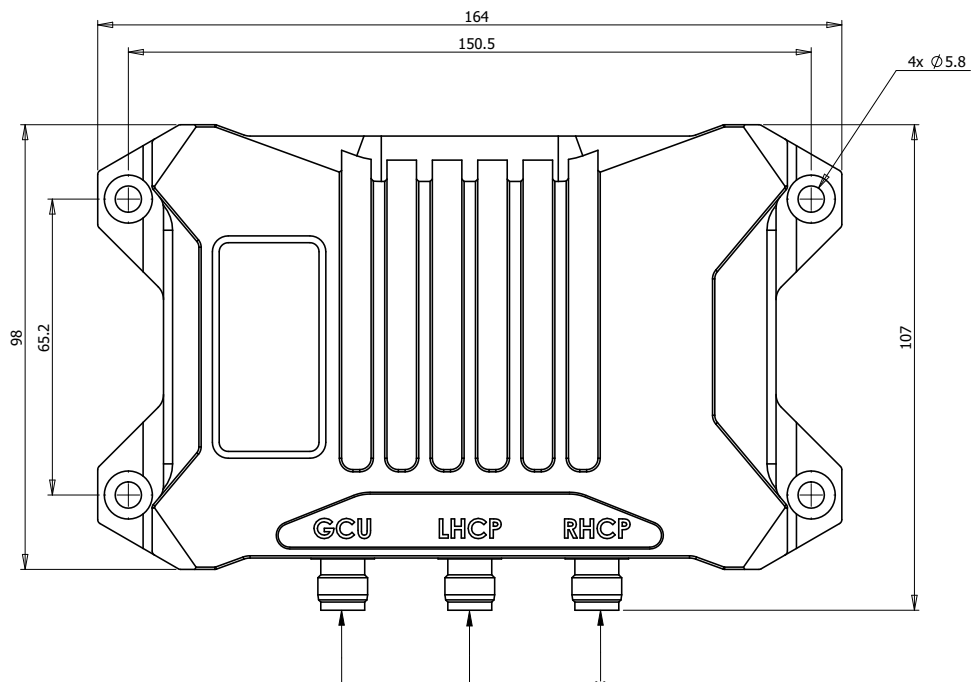

Figure 2-4: Aero HLD installation

2.3.4 To install the Aero GCU in the aircraft

The Aero GCU is designed to be mounted on a flat surface.

1. Install the Aero GCU inside a temperature-controlled and pressurized area. The Aero GCU unit can be mounted outside pressurized locations on aircraft that do not fly above 15,000 feet.
2. Place the Aero GCU with as much free space around it as possible to keep the temperature down and optimize performance.
3. When placing the Aero GCU, make sure there is enough space to access cables and the switch, and to see the status of the LEDs. You can find the dimensions of the Aero GCU in Figure A-3 in Appendix A.
4. Based on Figure 2-5 below, calculate and mark up the position of the mounting holes.
5. Mount the Aero GCU with 4 screws (normal or self-tapping screws, depending on the mounting surface) through the 4 mounting holes in the mounting flanges.

Important Use the mounting flange for grounding the Aero GCU. Use serrated washers and make sure there is a good electrical connection between the mounting flanges and the fuselage.

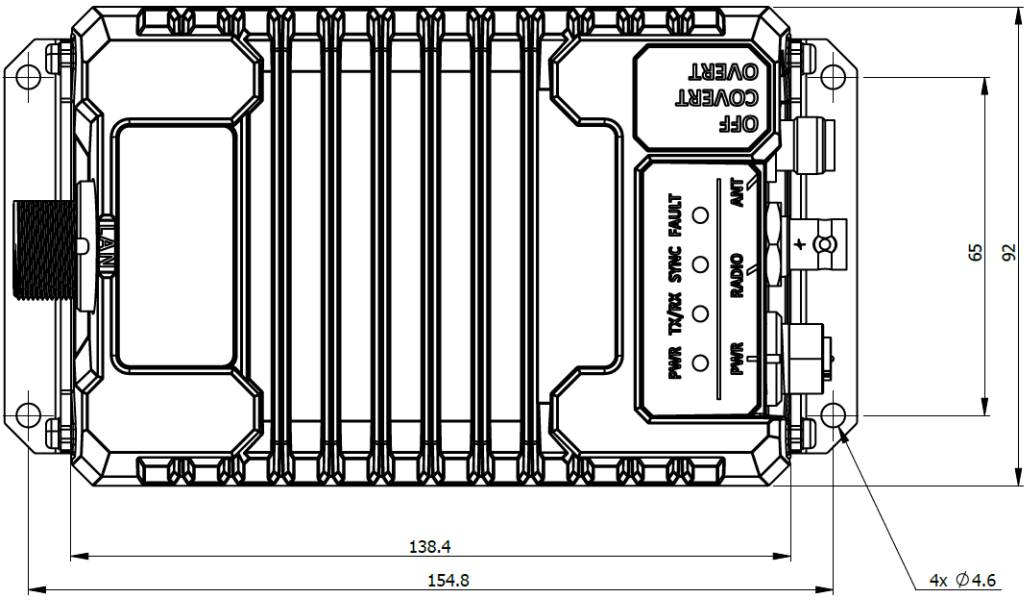

Figure 2-5: Aero GCU installation

2.4 Electrical installation and wiring

The following drawing shows the wiring for an aeronautical T-TAC system.

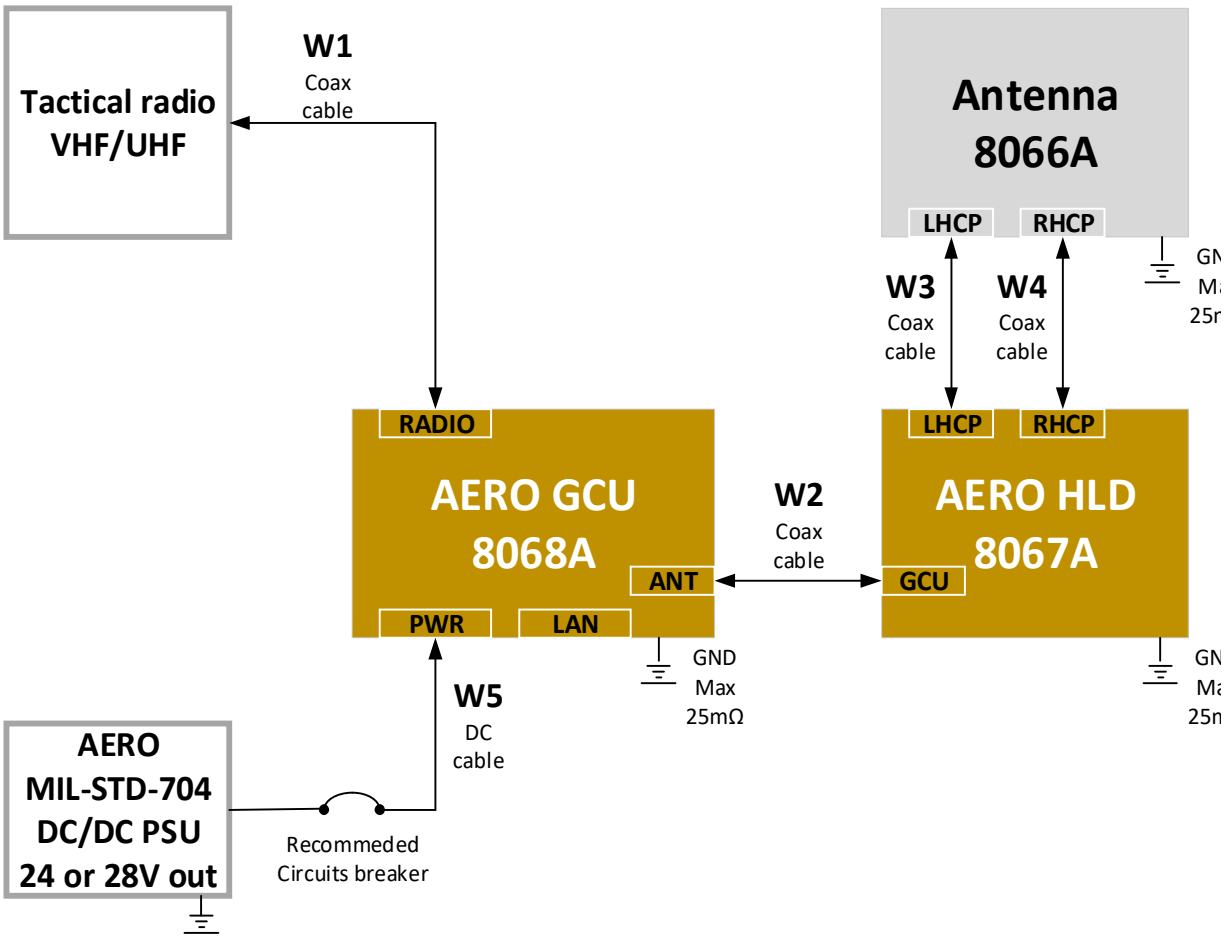

Figure 2-6: Wiring aeronautical T-TAC

2.4.1 To connect the Aero GCU to the power supply

The Aero GCU can be supplied with 24 or 28 VDC power input voltage. The selected power source must meet the MIL-STD-704 specifications in order to ensure correct operation and to avoid damaging the Aero GCU. For recommended power supply, see *Recommended power supply* on page B-1.

Note The Aero GCU DC+ input Power wire must include a circuit breaker capable of carrying the required current continuously under the required environmental conditions. Recommended circuit breaker: Klixon 2TC series, with 1.5 A current rating.

1. Connect the open end of the included power cable (**W5** in Figure 2-6) to a suitable power source, including a circuit breaker in the DC+ power wire (see note above).

   Important The **BROWN** wire is DC+ and the **BLACK** wire is DC-.

   If there is an extra wire in the power W5 cable, cut it off at the open end as close to the cable insulation as possible.
2. Connect the other end of the power cable to the **PWR** connector on the GCU.

Power cable requirements:

Important It is essential to keep the line impedance below the specified limits.

Note If the Aero GCU is installed on an aircraft with composite skin/structure, the DC cable +/- wires should run together (Bundled) and preferably in a shielded cable to comply with MIL-STD-461 CS117. On aircraft with metal structure it is not necessary to bundle the DC cable.

- Aero GCU DC+ input: Power wire total resistance max. 300 mOhm incl. Circuit Breaker.
- Aero GCU GND, power return: The cable should be as short as possible, max. 1 m. Total resistance max. 50 mOhm.
- Aero GCU Chassis should be grounded directly to Aircraft Ground. Total resistance max. 25 mOhm.

2.4.2 To connect the Aero GCU to the Aero HLD

CAUTION! Do **not** connect the Aeronautical antenna directly to the Aero GCU - it must be connected via the Aero HLD.

Aero GCU and Aero HLD must be connected with a coax cable (**W2** in Figure 2-6). The Coax Cable must have TNC male connectors at both ends and is connected between the Aero GCU **Ant** connector and the Aero HLD **GCU** connector.

Aero GCU to Aero HLD RF cable	Min. cable loss @1.6 GHz	Max. cable loss @1.6 GHz	Cable loop DC resistance
Coax cable W2	0 dB	10 dB	< 1 Ohm

Table 2-1: RF cable between Aero GCU and Aero HLD

The W2 coax cable length can be up to 60 m, with a low loss Coax cable, e.g. HUPEN ½'' 5092-HLFR from Kabelwerk EUPEN AG.

2.4.3 To connect the Aero HLD to the Antenna

CAUTION! Do **not** connect the Aeronautical antenna directly to the Aero GCU - it must be connected via the Aero HLD.

Aero HLD and Antenna must be connected with two low loss TNC coax cables, which must be adapted to the aircraft installation. The two Coax Cables (**W3** and **W4** in Figure 2-6) shall have TNC male connectors at both ends and are connected as follows:

- The **W3** Coax cable connects between **Aero HLD LHCP** TNC female connector and **antenna LHCP** TNC female connector.
- The **W4** Coax cable connects between **Aero HLD RHCP** TNC female connector and **antenna RHCP** TNC female connector.

Aero HLD to antenna RF cables	Min. cable loss @1.6 GHz	Max. cable loss @1.6 GHz	Note: Signal type
Coax cable W3	0.3 dB	1 dB	This cable carries the Yahsat satellite Rx/Tx L-band signal
Coax cable W4	0.3 dB	1 dB	This cable carries the GPS satellite L-band signal

Table 2-2: RF cables between Aero HLD and antenna

The W3 and W4 coax cable length can be up to 6 m, with a low loss coax cable, e.g. HUPEN ½" 5092-HLFR from Kabelwerk EUPEN AG.

2.4.4 To connect a radio

CAUTION! Before connecting your radio, make sure it matches the specifications for the Aero GCU RADIO interface in *Radio interface (RADIO)* on page A-7.

1. Connect the radio's antenna interface to the **RADIO** connector on the Aero GCU using a suitable cable (**W1** in Figure 2-6) with max. 10 dB loss@500 MHz.

CAUTION! Ensure that the radio output power **does not exceed 2 W,** which is the maximum allowed input power for the Aero GCU. If your radio exceeds 2 W output power, **connect a suitable external attenuator** between the Aero GCU and the radio.

Operation

3.1 Before use

3.1.1 Authentication and initial configuration

Before starting up the system, the initial configuration must be done using the NOC Portal. Usually the administrator of the system takes care of this.

When the configuration is ready in the NOC Portal, and the Aero GCU is provisioned, the Aero GCU must be synchronized with the NOC using the Ethernet interface.

For details, see *Before installation* on page 2-2.

Channel mapping

The Aero GCU can hold up to 6 active channel configurations, mapping a VHF or UHF (50 MHz to 500 MHz) radio channel to L-band transmit and receive channels. L-band uses separate bands for Tx (1626.5 MHz - 1660.5 MHz) and Rx (1525 MHz - 1559 MHz). Each channel configuration defines the mapping between the radio channel and the L-band Tx and Rx channels to be used. The table below is an example of this channel mapping.

Conf. ch. no.	Radio channel (50 to 500 MHz)		L-Band satellite channel	
	Tx	Rx	Tx (1625.5 - 1660.5 MHz)	Rx (1525 - 1559 MHz
#1	148 MHz	148 MHz	1.640.505 Hz	1.530.105 Hz
...	...	...	...	...
#6	138 MHz	139 MHz	1.640.550 Hz	1530.220 Hz

Table 3-1: Example of channel mapping in Aero GCU

It is possible to define separate Tx and Rx frequencies for the tactical radio (depending on radio capabilities). All channel configuration is done from the NOC Portal and downloaded to the Aero GCU.

Note The connected radio must be configured with the same channels.

3.2 To start up the system

3.2.1 To switch on the system

WARNING! Keep a minimum safety distance of 22 cm to the antenna when the system is powered.

1. Flip the switch to **COVERT** position (center) to switch on the system.

Figure 3-1: Switch on system

When the system is switched on, it goes through a startup sequence.

2. Hold the switch on **OVERT** for a few seconds (max. 20!) to show status LEDs.

CAUTION! If you hold the switch on OVERT for more than 20 seconds the Aero GCU will be zeroized!
After 30 seconds the Aero GCU can no longer be used, and must be manually reactivated from the NOC Portal.

- When the system is initializing, the **PWR** LED is blinking green.
- When the system is ready, the LEDs **PWR**, **TX/RX** and **FAULT** are steady green.

For details on the LEDs, see Table 3-2 on page 3-3.

When the system is ready, it automatically enters receive mode.

Receive and transmit modes

Receive mode:
After the T-TAC system is started up, it automatically enters receive mode. In receive mode, the system actively monitors and converts signals on all the configured channels. The radio must be configured to the correct channel to receive a transmission.

Transmit mode:
The T-TAC actively monitors the defined tactical radio channels for active transmissions from the connected radio. When transmission is detected, the T-TAC switches from receive mode and enters transmit mode. The Aero GCU automatically determines the Radio channel frequency and maps it to the defined L-Band Tx frequency. After transmission is completed, the T-TAC returns to receive mode.

3.3 Use of the radio system

When the radio and the T-TAC are both configured and connected and the system is powered, the T-TAC system does not require any further attention from the user.

Select the radio channel for communication and start the transmission as you would normally do on your radio. The T-TAC automatically detects the channel for transmission and switches between reception and transmission.

3.4 LED functions

Figure 3-2: LEDs on the Aero GCU

The table below shows the LED functions. **See also *Troubleshooting* on page 4-1**.

LED	**PWR**	**TX/RX**	**SYNC**	**FAULT**
Function	Power state	Transmit/Receive state	Synchronization[1]	Fault
Steady Green	All systems operational.	Rx mode (receiving).	Synchronization done. LAN cable connected.	No fault.
Blinking Green	Systems initializing.	Tx mode (transmitting).	Synchronization done. To activate, switch off 10 sec. then back on.	-
Blinking Yellow[2]	-	-	Synchronizing.	GPS fix lost.
Steady Red[2]	System standby (all other LEDs Off).	Input power from the radio is outside range (20 mW to 2 W).	Error/ not configured.	Aero GCU failure.
Blinking slowly[3]	-	-	-	Aero HLD failure.
Blinking fast[3]	-	-	-	Cable failure between Aero GCU and Aero HLD.
Off	Power is off.	Transceiver deactivated.	Synchronization not ongoing, and LAN cable not connected.	-

Table 3-2: LED patterns

1. Synchronization refers to NOC data exchange (Network Operating Center).
2. **All LEDS simultaneously yellow or re**d: Zeroization or Factory reset is ongoing! See *To zeroize the system* on page 3-4.
3. Blinking speed:

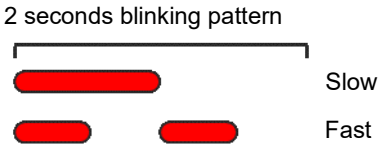

3.5 To test the system

To verify the successful installation of the system:

1. Start up the system as described in the previous section *To start up the system* on page 3-2.
2. Check that the Aero GCU LEDs **PWR**, **TX/RX** and **FAULT** are steady green.
3. Check that the radio is on and connected.
4. Make a test call to another T-TAC system configured to match yours.
5. If verification fails, see *Troubleshooting* on page 4-1.

3.6 To zeroize the system

In extreme situations it may be necessary to zeroize the system, to make it unusable for others.

CAUTION! When you have zeroized the Generic Converter Unit, it can no longer be used!
It can only be reactivated manually using the NOC Portal.

To zeroize the system:

1. Hold the switch on **OVERT** for 30 seconds.

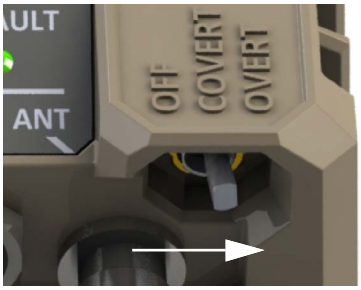

The figure below shows the LED sequence during zeroization:

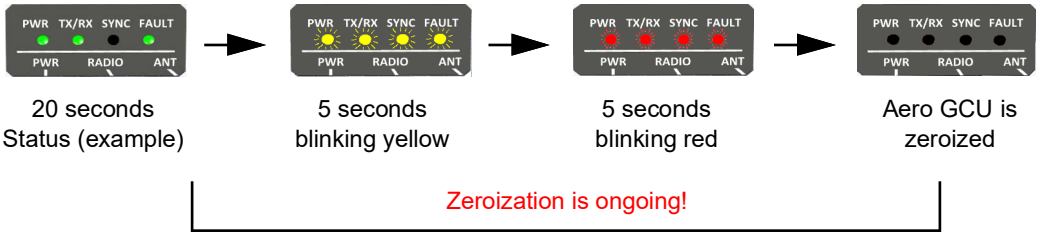

Figure 3-3: Zeroization LED pattern

2. When all LEDs are off you can release the switch. **The Aero GCU is now zeroized** and will reboot.

When the Aero GCU is zeroized, it can only be reactivated manually using the NOC Portal.

3.7 To reset the system to factory default

1. Hold the switch on **OVERT** for 60 seconds.
   While holding the switch on OVERT, after the zeroize LED sequence (described in previous section), the factory reset sequence will start.

Push and hold > zeroization sequence----------> Factory reset sequence

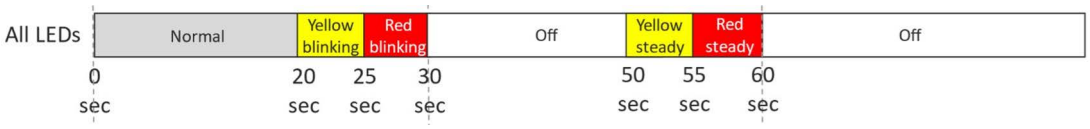

2. When all LEDs are off after the second sequence you can release the switch. The Aero GCU is now factory reset and will reboot.
3. When the Aero GCU is factory reset it must undergo first time configuration to become operational again.

Maintenance and troubleshooting

4.1 Software update of T-TAC

When there is a new software version on the server, the T-TAC will automatically download and install the software when it connects to the server to synchronize.

For details on the synchronization process, see *To synchronize and load the configuration into the Aero GCU* on page 2-2.

4.2 Troubleshooting

Issue	Explanation/Remedy
Cannot receive nor transmit radio calls.	No system power: Check the LEDs (toggle switch to **OVERT**). If no light: check the power cable between Aero GCU and power supply. Channel configuration problem: Check that the RX/TX LED changes to TX (blinking) when transmitting. Ensure the radio is configured according to the channel map. Make sure the sender and receiver are using the same channel.
Aero HLD fault (**FAULT** LED blinking slowly red).	Restart the system. Check cable between Aero GCU and Aero HLD for correct installation. Check cable for damage and replace if necessary. The cable loss must be max. 10 dB. If the error persists, replace the Aero HLD.
Aero HLD cable fault (**FAULT** LED blinking fast red).	Check cable between Aero GCU and Aero HLD for correct installation. Check cable for damage and replace if necessary.The cable loss must be max. 10 dB, for specifications see *Aero HLD interface (ANT)* on page A-7.
GPS fix lost (**FAULT** LED blinking yellow).	The T-TAC has lost GPS fix. Make sure the antenna has free line of sight to as much of the sky as possible. Wait a few minutes for the T-TAC to obtain GPS fix.

Table 4-1: Troubleshooting selected issues

In general, if an error occurs, you have the following options:

Note For troubleshooting of your radio refer to the documentation for the radio.

- **Check LEDs**
  If an error occurs, first check the LEDs by holding the Aero GCU switch on **OVERT**. Refer to Table 4-1 above and Table 3-2 in the *Operation* chapter for the LED patterns.
- **Check cables and power supply**
  Depending on the LED indications, check all cables for correct installation and/or damage.
  Check that the power supply is functional and is correctly installed.

- **Check configuration**
  If you can connect to the configuration server, synchronize the T-TAC as described in *To synchronize and load the configuration into the Aero GCU* on page 2-2. Check that the SYNC LED shows that the system is synchronized successfully.
  Otherwise you may check the radio configuration against your channel table or other document showing the configuration.
- **Zeroization**
  If you still cannot solve the problem, you can zeroize the Aero GCU, which will reset the Aero GCU to factory settings. See *To zeroize the system* on page 3-4.

CAUTION! When the Aero GCU is zeroized it **does not work** until it is reactivated manually using the NOC Portal!

Additionally, a person with access to the NOC Portal can see error messages from the T-TAC when it is connected to the server.

4.3 Command line interface

The administrator command line interface can be accessed via the Aero GCU LAN interface using SSH. Use the following parameters to connect to the Aero GCU:

- IP address: **192.168.1.88**
- Username: **admin**
- Password (default): <serial number>

Important The system requires a change of the password on first login.

The table below shows the most important commands.

Command	Description
`stage1-set <URL>`	Sets the stage 1 server URL.
`stage1-get`	Shows the currently configured stage 1 server URL.
`status`	Prints the system status of system, such as: • Aero GCU SW version • GCU variant • Antenna SW version • Antenna variant • Cryptographic self-test result
`Syslog`	Prints the system log file since last boot.
`recovery`	Puts the system in recovery mode to allow the manual upload of software.
`passwd`	Changes the password of the admin user.

Table 4-2: Commands for administrator command line interface

Appendices

Specifications

A.1 Aeronautical antenna, model 8066A

The Aero T-TAC system uses the **Satcom S65-8282-301** antenna from Sensor Systems Inc. The omnidirectional antenna unit is a passive unit and is optimized for both rotor wing and fixed wing installations. The antenna provides LHCP satellite interface to Yahsat satellite network and RHCP GPS interface in one package.

The data sheet and outline drawing from Sensor Systems are included on the following pages.

Note For updated versions of the data sheet and outline drawing, contact Sensor Systems Inc.

Note Electrical specifications: Cobham Satcom has verified that this antenna's G/T 1525 to 1559 MHz and EIRP 1626.5 to 1660 MHz complies with the requirements in the T-TAC Aero fixed wing link budget.

Satcom S65-8282-301

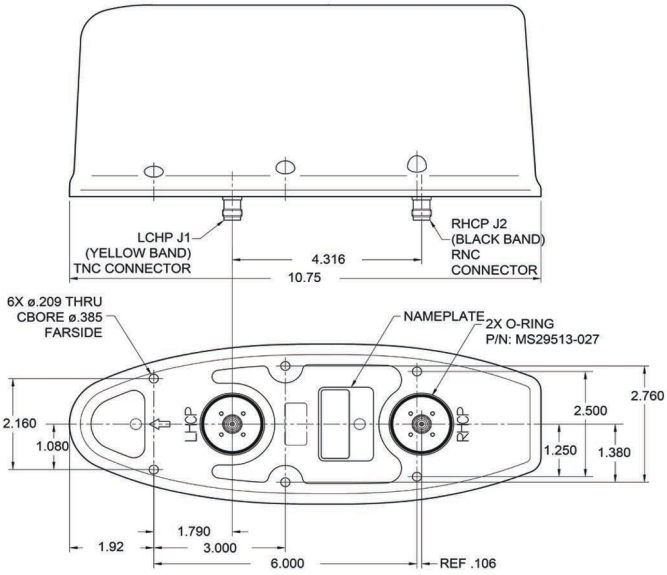

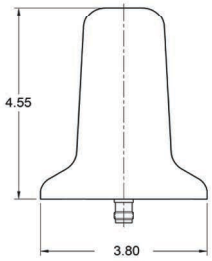

Please Note: For REFERENCE ONLY
Contact Sensor Systems for latest drawing

Description

This low gain Satcom antenna provides LHCP and RHCP Satcom communications in one package.

The **S65-8282-301** antenna is designed to be used with US military Blue Force Tracking Systems. The small aerodynamic blade is optimized for both rotor wing and fixed wing installations.

Federal & Military Certifications:
DO-160D, MIL-HDBK-5400 and MIL-STD-810C.

Specifications

Electrical	
Frequency	Receive: 1530-1559 MHz Transmit: 1626.5-1660.5 MHz
VSWR	≤1.5:1
Gain	≥-2 dBic @ -20° ≤ Θ ≤ +20° ≥ 0 dBic @ +20°< Θ ≤ +78° ≥ 0 dBic @ -20° > Θ ≥ -78° 0° = Zenith
Polarization	J1: LHCP J2: RCHP
Impedance	50 Ω
Power	60 Watts CW
Axial Ratio	6 dBic Max @ -30° ≤ Θ ≤ +30° 10 dBic Max @ +30° < Θ ≤ +78° 10 dBic Max @ -30° > Θ ≥ -78°
Mechanical	
Weight	1.7 lbs.
Height	4.55 in.
Length	10.70 in.
Width	3.80 in.
Material	Aluminum Alloy 6061-T6
Finish	Skydrol Resistant Polyurethane Enamel
Connector	TNC Female (2x)
Environmental	
Temperature (Operating)	-55°C (-65°F) to +85°C (+185°F)
Altitude	70,000 ft.
Accessories	
O-ring	MS29513-027 (2x)

Sensor Systems Inc.
A HEICO COMPANY

Website: www.sensorantennas.com Phone: 818-341-5366

Figure A-1: Specifications for Aero antenna 8066A

A.1.1 Outline drawing for Aero antenna

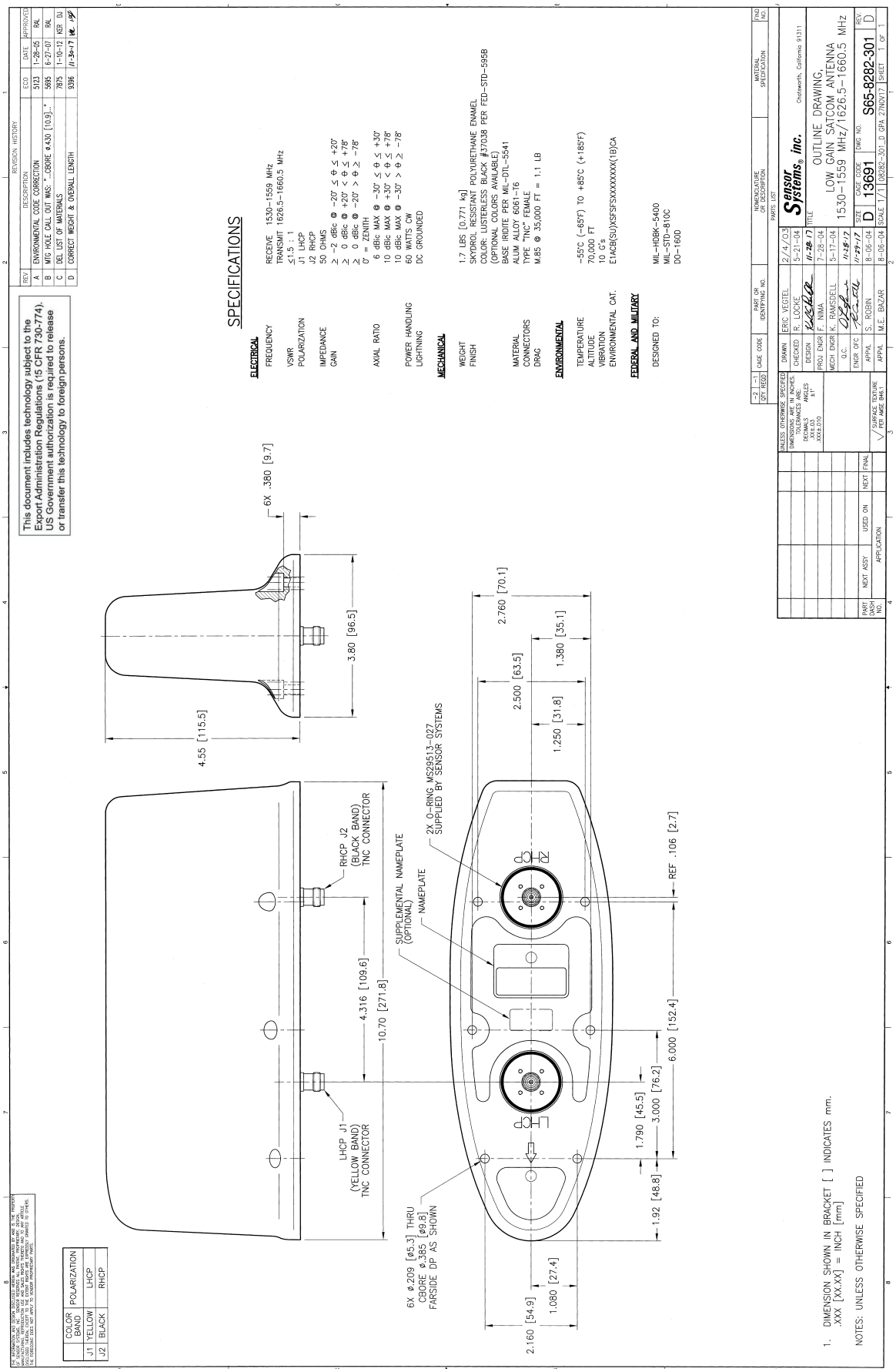

A.2 Aero HLD, model 8067A

A.2.1 Aero HLD general specifications

Item	Specifications
Dimensions	Height: 31 mm Width: 164 mm Depth: 98 mm (107 mm incl. connectors)
Weight	630 g
Interfaces:	**GCU:** Aero GCU interface, TNC female connector. **LHCP**: LHCP satcom antenna interface, TNC female connector. **RHCP:** RHCP GPS antenna interface, TNC female connector.
Operating temperature	-21°C to +55°C
Storage temperature	-25°C to +80°C
Ingress Protection	IP68
Altitude	Pressurized: Up to 40.000 ft Non-pressurized: Up to 15.000 ft.
Tested to MIL standards	MIL-STD-461G (EMC) MIL-STD-810H (Environmental engineering and test) MIL-STD-901D (Shock)

Table A-1: Aero HLD general specifications

A.2.2 Outline drawing with dimensions, Aero HLD

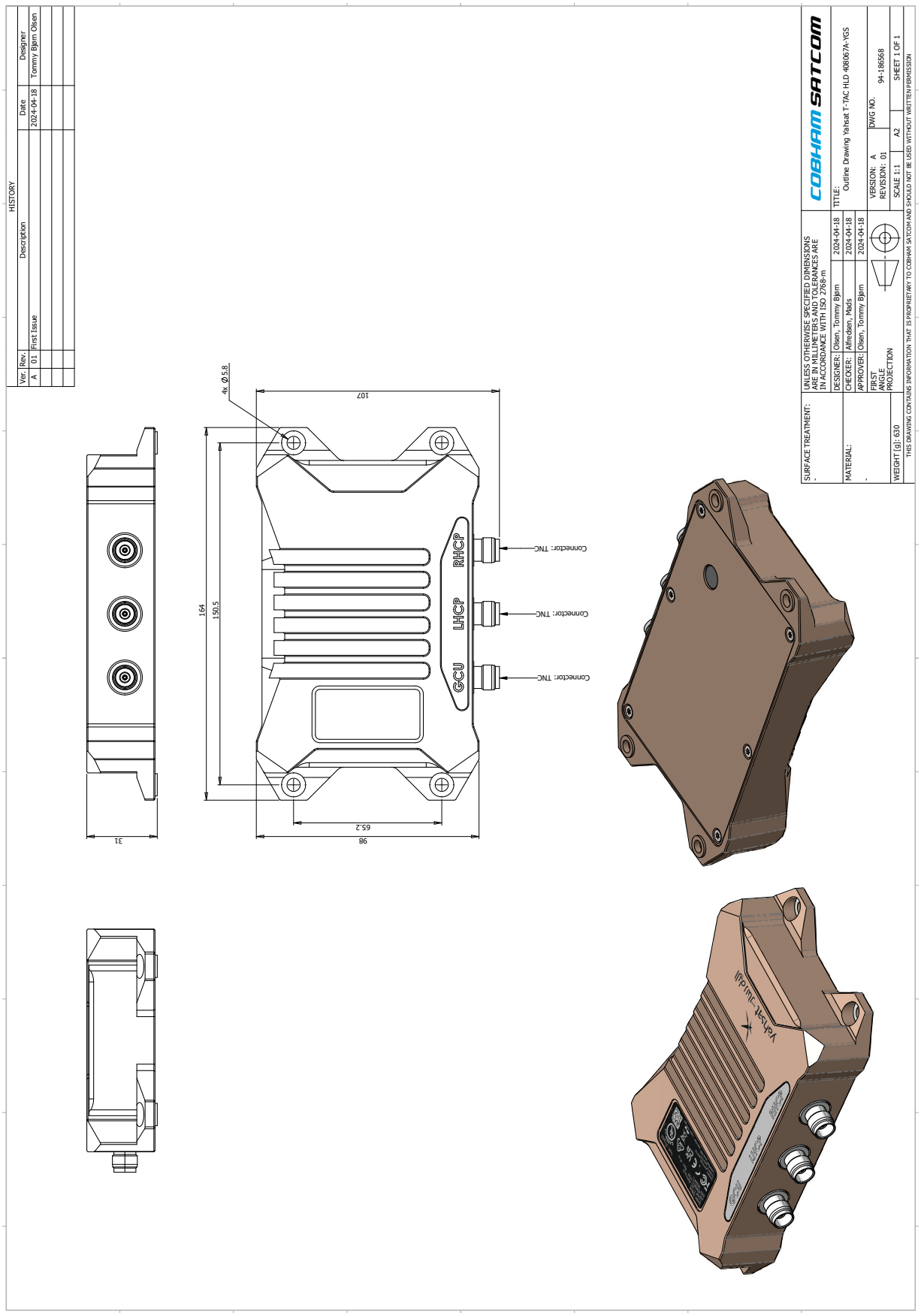

Figure A-2: Outline drawing with dimensions, Aero HLD

A.3 Aero GCU, model 8068A

A.3.1 General specifications

Item	Specifications
T-TAC L-band frequency range	Rx 1525 to 1559 MHz Tx 1626.5 to 1660.5 MHz
Dimensions	Height: 38 mm Width: 92 mm Depth: 173 mm (dimensions are including connectors and mounting flange)
Weight	550 g /1.2 lbs
Operating temperature	-21°C to +55°C
Storage temperature	-25°C to +80°C
Ingress Protection	IP68
Power consumption, Typical	Rx mode: 7.2 W Tx mode, 25 kHz: 17 W Tx mode, 5 kHz: 15 W
Power consumption, Peak	Tx mode: 25 W
Encryption	Any encryption on the radio interface is maintained over the satellite link. The connection between the T-TAC and the Network Operation Center/server uses TLS 1.2 and 1.3 cryptographic protocols.
Tested to MIL standards	MIL-STD-461G (EMC) MIL-STD-810H (Environmental engineering and test)
Altitude	Pressurized: Up to 40.000 ft Non-pressurized: Up to 15.000 ft.

Table A-2: Aero GCU general specifications

A.3.2 Interface specifications

Specifications of the interfaces on the Aero GCU.

Interface	Specifications
Power input (PWR) 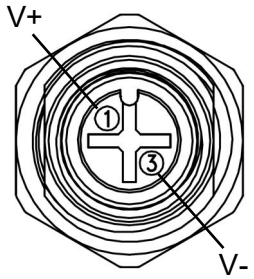 	• Connector type: M12 connector, female. • DC input range: 12-28 VDC nominal (max. range 8-32 VDC). • Peak power consumption: Max. 25 W. • 1 m power cable is included, open-ended towards the MIL-STD 704 power supply.
Radio interface (RADIO)	• Connector type: BNC, female. • Input frequency range 50 to 500 MHz. • Tx Input power: min. 20 mW and max. 2 W.[1] • Cable length: m standard, up to 100 m depending on the cable type. • Max cable loss: 10 dB at 500 MHz. • VHF/UHF Radio channels must be within an arbitrary max 40 MHz wide range from 50 MHz to 500 MHz.
Aero HLD interface (ANT)	• Connector type: TNC, female. • Cable length: 1 m standard, up to 100 m depending on the cable type. • Max cable loss 10dB at 1.5 to 1.7 GHz and max DC resistance 1 Ohm in center conductor + screen.
LAN	• Connector type: RJ-45, with circular metal housing. • 10BaseT. Used for configuration only.

Table A-3: Aero GCU interface specifications

1. If the output power of the Tactical Radio can exceed 2 W, insert a suitable external attenuator between the radio and the Aero GCU.

A.3.3 Outline drawing with dimensions, Aero GCU

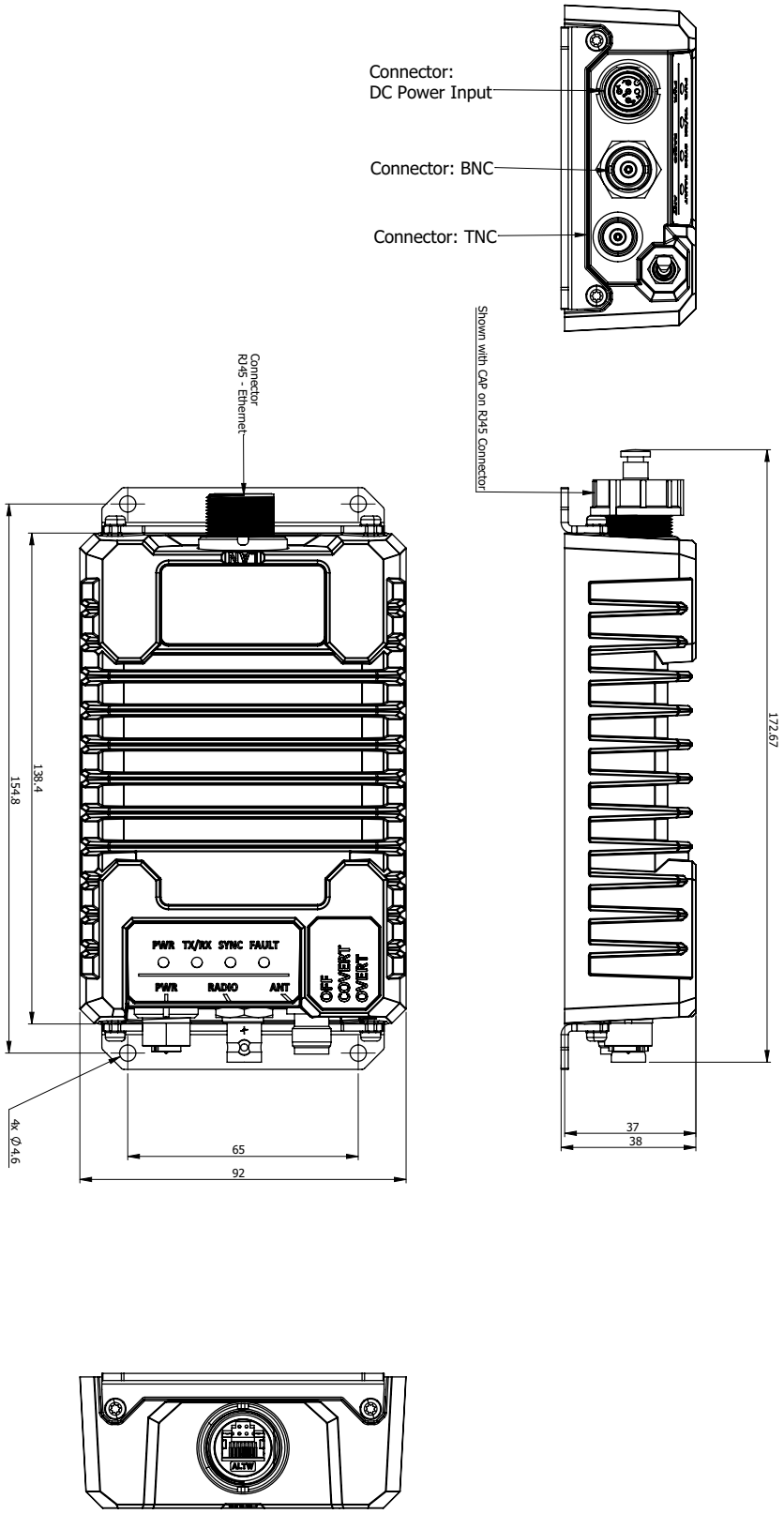

Figure A-3: Outline drawing with dimensions, Generic Converter Unit

Recommended power supply

B.1 Specifications for M7019-17

The Enercon power supply **M7019-17** meets the power supply requirements of the Aeronautical T-TAC.

The table below lists the specifications for the M7019-17 Power Supply.

Note Specifications are subject to change without prior notice by the manufacturer.

Item	Specification
Power input 24 VDC or 28 VDC	PSU input protection • Under-voltage lockout if input voltage is below 16 VDC +/- 1 VDC. • Over-voltage lockout if voltage > 53 VDC+/-1 VDC • Reverse polarity protection
DC input protection	MIL-STD-1275E
Power output to GCU	24 VDC 1.2 A
Size	82.8 mm x 46.5 mm x 18.2 mm
Weight	134 g
Environmental conditions	Designed to meet MIL-STD-810G
Temperature	Method 501.5 & 502.5
Operating	-55°C to +85°C (at the baseplate)
Storage	-55°C to +125°C (ambient)
Altitude	Method 500.5 Up to 70,000ft.
Humidity	Method 507.5 Up to 95% RH

Table B-1: M7019-17 Power Supply, specifications

Item	Specification
Vibration	Method 514.6 Category 7: Aircraft - Jet, IAW figure C-6, 13.7 grams, 1 hour per axis. Category 24: Minimum integrity, IAW figure E-3, 7.7 grams, 1 hour per axis.
Shock	Method 516.6 Operational shock: 30 g, 11 ms, half-sine. Crash safety: 100 g, 6 ms, half-sine.
Salt Fog	Method 509.5
EMC	MIL-STD-461F
EMC standards	Designed to meet MIL-STD-461F with 5 μ-H LISN, shielded harness and static resistive load. CE101, CE102, CS101, CS114, CS115, CS116, RE101, RE102, RS101, RS103
Reliability (MTBF)	150,000 hours, calculated per MIL-STD-217F Notice 2 at +85°C baseplate, Ground Fix environment.

Table B-1: M7019-17 Power Supply, specifications (Continued)

B.1.1 Connection to M7019-17

The connector on the M7019-17 power supply has the following pin assignments.

Pin no.	Function	
1	Output	+
2	Sense	+
3	Sense Rtn	-
4	Output Rtn	-
5	Output Rtn	-
6	Input Rtn	-
7	Input	+
8	Inhibit	+

Pin no.	Function	
9	Output	+
10	Output	+
11	Output	+
12	Output Rtn	-
13	Output Rtn	-
14	Input Rtn	-
15	Input	+

Table B-2: Pin assignments on M7019-17 power supply

The connector is a DSUB-15 male (M24308/24-38F or equal).

Mating connector: DSUB-15 female: M24308/2-2F or equal.

For suggested cable, see cable drawing in Figure B-1 below.

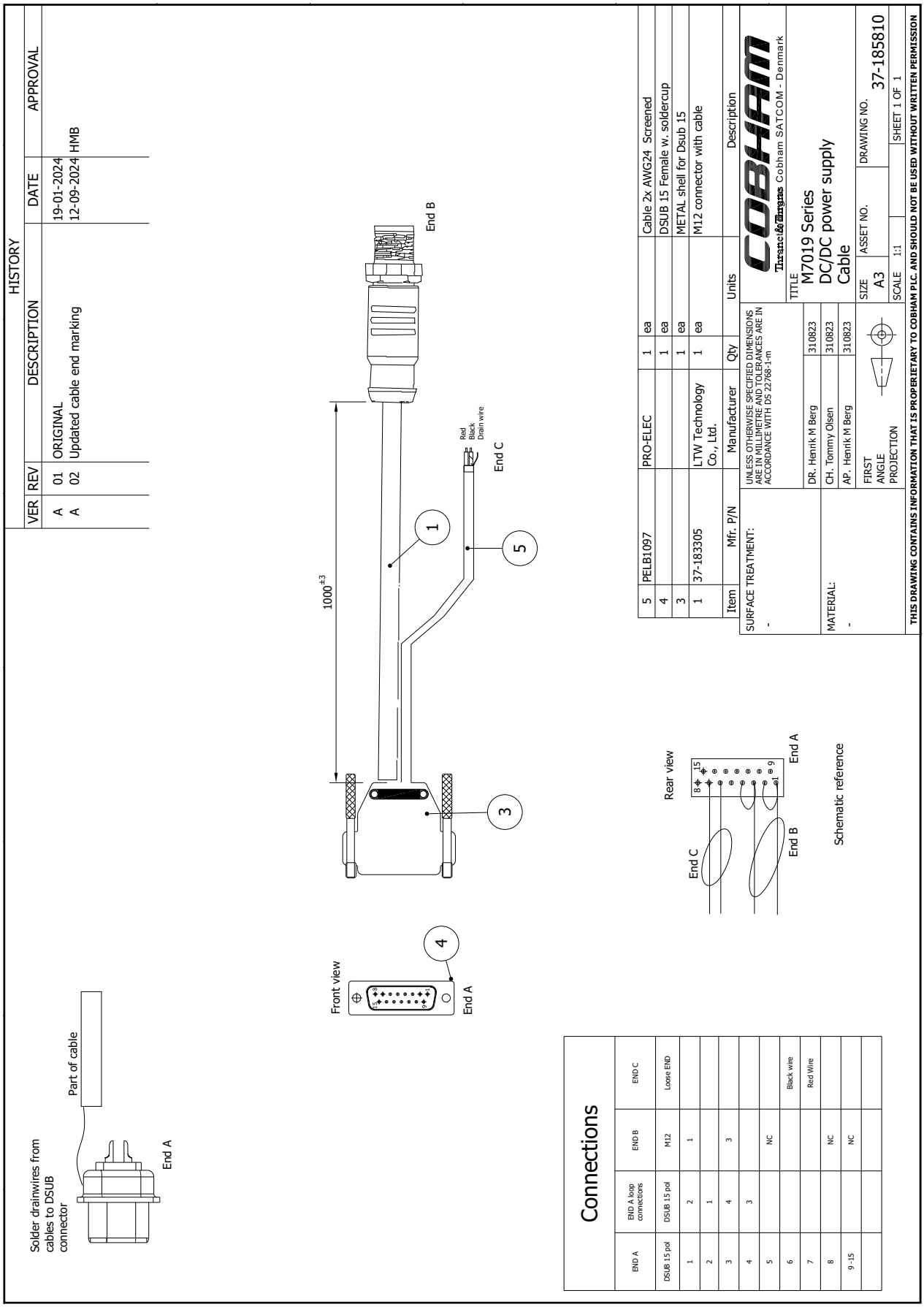

Figure B-1: Example cable for M7019-17 power supply

B.1.2 Outline drawing for M7019-17 Power Supply

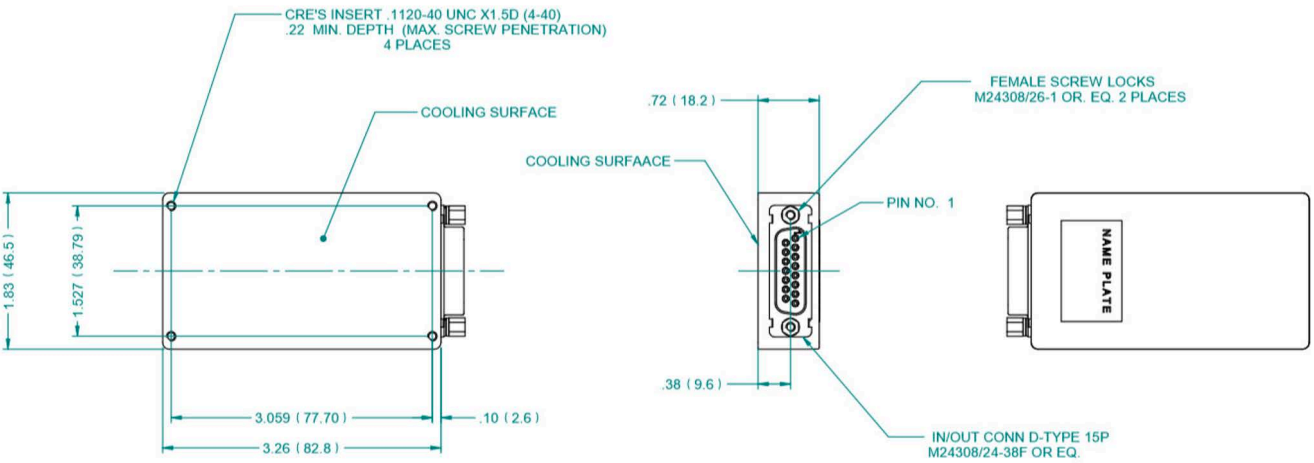

Notes

1. Dimensions are in inches [mm]
2. Tolerance is:
   .XX ± 0.02 in
   .XXX ± 0.010 in
3. Weight: 134 g

Figure B-2: Outline drawing for for M7019-17 Power Supply

Conformity

Certificates of approval will be available in partnerportal.cobhamsatcom.com, or from your supplier.

C.1 EU (CE)

The Tactical Radio Extender (T-TAC) is CE certified as stated in the Declaration of Conformity.

C.2 UKCA

The Tactical Radio Extender (T-TAC) is UKCA certified as stated in the Declaration of Conformity.

C.3 MIL approvals

The Tactical Radio Extender (T-TAC) is approved to the following MIL standards:

- MIL-STD-810
- MIL-STD-463

C.4 RCM, Australia

The Tactical Radio Extender (T-TAC) is RCM certified as stated in the “Certificate/ Declaration of Conformance RCM”.

C.5 FCC

FCC e-label:

Yahsat T-TAC Aero

P/N: 408067A-41000

FCC ID: ROJ-8067A

This device complies with FCC 47 CFR Part 25 and Part 15 subpart B Class A.

Note: This equipment has been tested and found to comply with the limits for a Class A digital device, pursuant to part 15 of the FCC Rules. These limits are designed to provide reasonable protection against harmful interference when the equipment is operated in a commercial environment. This equipment generates, uses and can radiate radio frequency energy and, if not installed and used in accordance with the instruction manual, may cause harmful interference to radio communications. Operation of this equipment in a residential area is likely to cause harmful interference in which case the user will be required to correct the interference at his own expense.

NOTICE:

This device complies with part 15 of the FCC rules. Operation is subject to the following two conditions:

(1) this device may not cause harmful interference, and

(2) this device must accept any interference received, including interference that may cause undesired operation.

NOTICE:

Changes or modifications made to this equipment not expressly approved by Cobham Satcom may void the FCC authorization to operate this equipment.

Glossary

A

ANT	Antenna

B

BLOS	Beyond Line of Sight
BNC	Bayonet Neill–Concelman. A miniature quick connect/disconnect radio frequency connector used for coaxial cable.
BW	Bandwidth

G

GPS	Global Positioning System. A system of satellites, computers, and receivers, that is able to determine the latitude and longitude of a receiver on Earth by calculating the time difference for signals from different satellites to reach the receiver.

H

HLD	HPA, LNA and Diplexer in one unit
HPA	High Power Amplifier

L

LAN	Local Area Network
LED	Light-Emitting Diode
LHCP	Left Hand Circular Polarization
LNA	Low Noise Amplifier
LOS	Line of Sight

N

NOC	Network Operating Center.

P

PWR	Power

R

RHCP	Right Hand Circular Polarization
RX	Receive

S

SYNC	Synchronization. In this context it means synchronization between the NOC and the GCU.

T

TLS	Transport Layer Security
T-TAC	Thuraya Tactical Radio Extender
TX	transmit

U

UART	Universal Asynchronous Receiver/Transmitter
UHF	Ultra High Frequency

V

VHF	Very High Frequency

Index

A

About the T-TAC 1-1
antenna
  installation 2-4
approvals C-1
authentication 2-2

C

compliance C-1
configuration 2-2
  initial 2-2
conformity C-1
connectors
  overview 1-6
  radio 2-9
contents of delivery 2-1

D

dimensions
  drawings A-8
dimensions and weight
  Generic Converter Unit A-6
documents, related ..... -iii

F

features 1-2

G

Generic Converter Unit
  dimensions and weight A-6
  specifications A-6

I

Ingress Protection (IP grade) A-6
initial configuration 2-2
interface specifications, GCU A-7

L

LED
  functions 3-3
  overview 1-6

O

operating temperature A-6
outline drawings A-8

P

power consumption, typical A-6

R

radio, connect 2-9

S

safety summary .....-ii
software update 4-1
specifications A-1
  Generic Converter Unit A-6
storage temperature A-6
switch
  functions 1-6
switch on 3-2

T

temperature
  operating A-6
  storage A-6
test, initial 3-4
troubleshooting 4-1
T-TAC
  system overview 1-2
typography used in this manual .....-iii

U

update software 4-1

W

weight and dimensions
  Generic Converter Unit A-6