FCC SAR Test Report

Applicant:	Shenzhen KTC Technology Co., Ltd.
EUT Description:	BABY MONITOR
Model:	CB05-A1
FCC ID:	ROU-CB05A1PU
Standards:	FCC 47 CFR §2.1093
Date of Receipt:	2026/06/26
Date of Test:	2026/07/29 to 2026/07/30
Date of Issue:	2026/08/03

TOWE tested the above equipment in accordance with the requirements set forth in the above standards. The test results show that the equipment tested is capable of demonstrating compliance with the requirements as documented in this report.

The results documented in this report apply only to the tested sample, under the conditions and modes of operation as described herein. It is the manufacturer's responsibility to assure that additional production units of the model are manufactured with identical electrical and mechanical components. All samples tested were in good operating condition throughout the entire test program. Measurement Uncertainties are published for informational purposes only and were not taken into account unless noted otherwise. Without written approval of TOWE, the test report shall not be reproduced except in full.

Jim Huang
Approved By:

Jack Li
Reviewed By:

All rights reserved. Unless otherwise specified, no part of this report may be reproduced or utilized in any part, form or by any means, electronic or mechanical, including photocopying and microfilm, without permission in writing from TOWE.

Revision History

Rev.	Issue Date	Description	Revised by
01	2026/08/03	Original	Jack Li

All rights reserved. Unless otherwise specified, no part of this report may be reproduced or utilized in any part, form or by any means, electronic or mechanical, including photocopying and microfilm, without permission in writing from TOWE.

Table of Contents

1 Summary of Test Results 5
2 Guidance Applied 6
3 Lab Information 6
3.1 Testing Location 6
3.2 Test Facility / Accreditations 6
3.3 Ambient Condition 6
4 Client Information 6
4.1 Applicant 6
4.2 Manufacturer 6
4.3 Factory 6
5 Product Information 7
5.1 Antenna Locations 8
6 RF Exposure Limits 9
7 Introduction 10
7.1 SAR Definition 10
8 SAR Measurements System 11
8.1 The SAR Measurement Set-up 11
8.2 E-Field Probe 12
8.3 Data Acquisition Electronics (DAE) 12
8.4 Phantom 13
8.5 Device Holder 14
8.6 Measurement procedure 15
8.6.1 Power reference measurement 15
8.6.2 Area scan 15
8.6.3 Zoom Scan 16
8.6.4 Power Drift Measurement 16
9 Test Equipment list 17
10 SAR measurement variability 18
11 System Verification 19
11.1 Tissue Verification 19
11.2 SAR System Check 20
11.2.1 System Check Result 20
11.2.2 Detailed System Check Result 20
12 SAR General Measurement Procedures 21
12.1 SAR Testing with 802.11 Transmitters 21
12.1.1 Initial Test Position Procedure 21
12.1.2 Initial Test Configuration Procedure 21
12.1.3 Subsequent Test Configuration Procedures 22
12.1.4 2.4 GHz SAR Procedures 22
13 Conducted Power 23
14 SAR Data Summary 24
14.1 SAR Measurement Result of WIFI 2.4G 24
15 Measurement Uncertainty 25
16 Calibration Certificate 25
17 Test Setup Photos 25
Appendix A: System Check Plots 25
Appendix B: SAR Test Plots 25

All rights reserved. Unless otherwise specified, no part of this report may be reproduced or utilized in any part, form or by any means, electronic or mechanical, including photocopying and microfilm, without permission in writing from TOWE.

Appendix C: Calibration certificate 25
Appendix D: Test Setup Photos 25

All rights reserved. Unless otherwise specified, no part of this report may be reproduced or utilized in any part, form or by any means, electronic or mechanical, including photocopying and microfilm, without permission in writing from TOWE.

1 Summary of Test Results

Band	Highest SAR(W/kg)
	Body 1g SAR
WIFI 2.4G	0.61
SAR Limited(W/kg)	1.6

All rights reserved. Unless otherwise specified, no part of this report may be reproduced or utilized in any part, form or by any means, electronic or mechanical, including photocopying and microfilm, without permission in writing from TOWE.

2 Guidance Applied

FCC 47CFR §2.1093
ANSI/IEEE C95.1-1992
IEC/IEEE 62209-1528:2020
FCC KDB 248227 D01 SAR Guidance for IEEE 802 11 Wi-Fi SAR v02r02
FCC KDB 648474 D04 Handset SAR v01r03
FCC KDB 447498 D01 General RF Exposure Guidance v06
FCC KDB 865664 D01 SAR Measurement 100 MHz to 6 GHz v01r04
FCC KDB 865664 D02 RF Exposure Reporting v01r02

3 Lab Information

3.1 Testing Location

These measurements tests were conducted at the Sushi TOWE Wireless Testing(Shenzhen) Co., Ltd. facility located at F 401 and F 101, Building E, Hongwei Industrial Zone,No. 6, Liuxian 3rd Road, Zone 70, Xingdong Community, Xin'an Street, Bao'an District, Shenzhen, People's Republic of China. The measurement facility is compliant with the test site requirements specified in ANSI C63.4-2014
Tel.: +86-755-27212361
Contact Email: info@towewireless.com

3.2 Test Facility / Accreditations

A2LA (Certificate Number: 7088.01)
This laboratory is accredited in accordance with the recognized International Standard ISO/IEC 17025:2017 General requirements for the competence of testing and calibration laboratories. This accreditation demonstrates technical competence for a defined scope and the operation of a laboratory quality management system (refer to joint ISO-ILAC-IAF Communiqué dated April 2017).

FCC Designation No.: CN1353
Sushi TOWE Wireless Testing(Shenzhen) Co., Ltd. has been recognized as an accredited testing laboratory.
Test Firm Registration Number: 684095
Designation Number: CN1353.

ISED CAB identifier: CN0152
Sushi TOWE Wireless Testing(Shenzhen) Co., Ltd. has been recognized by ISED as an accredited testing laboratory.
CAB identifier: CN0152
Company Number: 31000

3.3 Ambient Condition

Temperature: 18°C~25°C
Relative Humidity: 30%~75%

4 Client Information

4.1 Applicant

Applicant:	Shenzhen KTC Technology Co., Ltd.
Address:	Northern Wuhe Road, Gangtou,Buji,Longgang, Shenzhen, China

4.2 Manufacturer

Manufacturer:	Shenzhen KTC Technology Co., Ltd.
Address:	Northern Wuhe Road, Gangtou,Buji,Longgang, Shenzhen, China

4.3 Factory

Factory:	Dong Guan Kan Tsang ElectroacousticTechnology Co.,Ltd.
Address:	Room 402, Unit 1, No. 8, Lu Yi 1st Road, Tangxia Town, Dongguan, Guangdong, China

All rights reserved. Unless otherwise specified, no part of this report may be reproduced or utilized in any part, form or by any means, electronic or mechanical, including photocopying and microfilm, without permission in writing from TOWE.

5 Product Information

EUT Description	BABY MONITOR	
Model	CB05-A1	
Software Version	V1.0	
Hardware Version	V1.0	
Device Capabilities:		
Band	Frequency Range (MHz)	Modulation Type
Wi-Fi 2.4G	2400~2483.5	802.11b/11g/11n 20M
Antenna Type	☐ External, ☒ Integrated	
Remark: The above EUT's information was declared by applicant, please refer to the specifications or user manual for more detailed description.		

All rights reserved. Unless otherwise specified, no part of this report may be reproduced or utilized in any part, form or by any means, electronic or mechanical, including photocopying and microfilm, without permission in writing from TOWE.

5.1 Antenna Locations

All rights reserved. Unless otherwise specified, no part of this report may be reproduced or utilized in any part, form or by any means, electronic or mechanical, including photocopying and microfilm, without permission in writing from TOWE.

6 RF Exposure Limits

Human Exposure	Uncontrolled Environment General Population (W/kg) or (mW/g)	Controlled Environment Occupational (W/kg) or (mW/g)
Spatial Peak SAR[1] (Brain/Trunk)	1.6	8.0
Spatial Average SAR[2] (Whole Body)	0.08	0.4
Spatial Peak SAR[3] (Hands/Feet/Ankle/Wrist)	4.0	20.0

Note:

1, The Spatial Peak value of the SAR averaged over any 1 gram of tissue (defined as a tissue volume in the shape of a cube) and over the appropriate averaging time.

2, The Spatial Average value of the SAR averaged over the whole body.

3, The Spatial Peak value of the SAR averaged over any 10 grams of tissue (defined as a tissue volume in the shape of a cube) and over the appropriate averaging time.

Uncontrolled Environments are defined as locations where there is the exposure of individuals who have no knowledge or control of their exposure. The general population/uncontrolled exposure limits are applicable to situations in which the general public may be exposed or in which persons who are exposed as a consequence of their employment may not be made fully aware of the potential for exposure or cannot exercise control over their exposure. Members of the general public would come under this category when exposure is not employment-related; for example, in the case of a wireless transmitter that exposes persons in its vicinity.

Controlled Environments are defined as locations where there is exposure that may be incurred by persons who are aware of the potential for exposure, (i.e. as a result of employment or occupation). In general, occupational/controlled exposure limits are applicable to situations in which persons are exposed as a consequence of their employment, who have been made fully aware of the potential for exposure and can exercise control over their exposure. The exposure category is also applicable when the exposure is of a transient nature due to incidental passage through a location where the exposure levels may be higher than the general population/uncontrolled limits, but the exposed person is fully aware of the potential for exposure and can exercise control over his or her exposure by leaving the area or by some other appropriate means.

All rights reserved. Unless otherwise specified, no part of this report may be reproduced or utilized in any part, form or by any means, electronic or mechanical, including photocopying and microfilm, without permission in writing from TOWE.

7 Introduction

SAR is related to the rate at which energy is absorbed per unit mass in an object exposed to a radio field. The SAR distribution in a biological body is complicated and is usually carried out by experimental techniques or numerical modeling. The standard recommends limits for two tiers of groups, occupational/controlled and general population/uncontrolled, based on a person's awareness and ability to exercise control over his or her exposure. In general, occupational/controlled exposure limits are higher than the limits for general population/uncontrolled.

7.1 SAR Definition

The SAR definition is the time derivative (rate) of the incremental energy (dW) absorbed by (dissipated in) an incremental mass (dm) contained in a volume element (dv) of a given density (ρ). The equation description is as below:

$$\boldsymbol{SAR = \frac{d}{dt}\left(\frac{dW}{dm}\right) = \frac{d}{dt}\left(\frac{dW}{\rho dv}\right)}$$

SAR is expressed in units of Watts per kilogram (W/kg):

$$\mathbf{SAR} = \frac{\boldsymbol{\sigma E^2}}{\boldsymbol{\rho}}$$

Where:

σ is the conductivity of the tissue material (S/m)

ρ is the mass density of the tissue material (kg/m^3)

E is the RMS electrical field strength (V/m)

All rights reserved. Unless otherwise specified, no part of this report may be reproduced or utilized in any part, form or by any means, electronic or mechanical, including photocopying and microfilm, without permission in writing from TOWE.

8 SAR Measurements System

8.1 The SAR Measurement Set-up

The DASY system used for performing compliance tests consists of the following items:

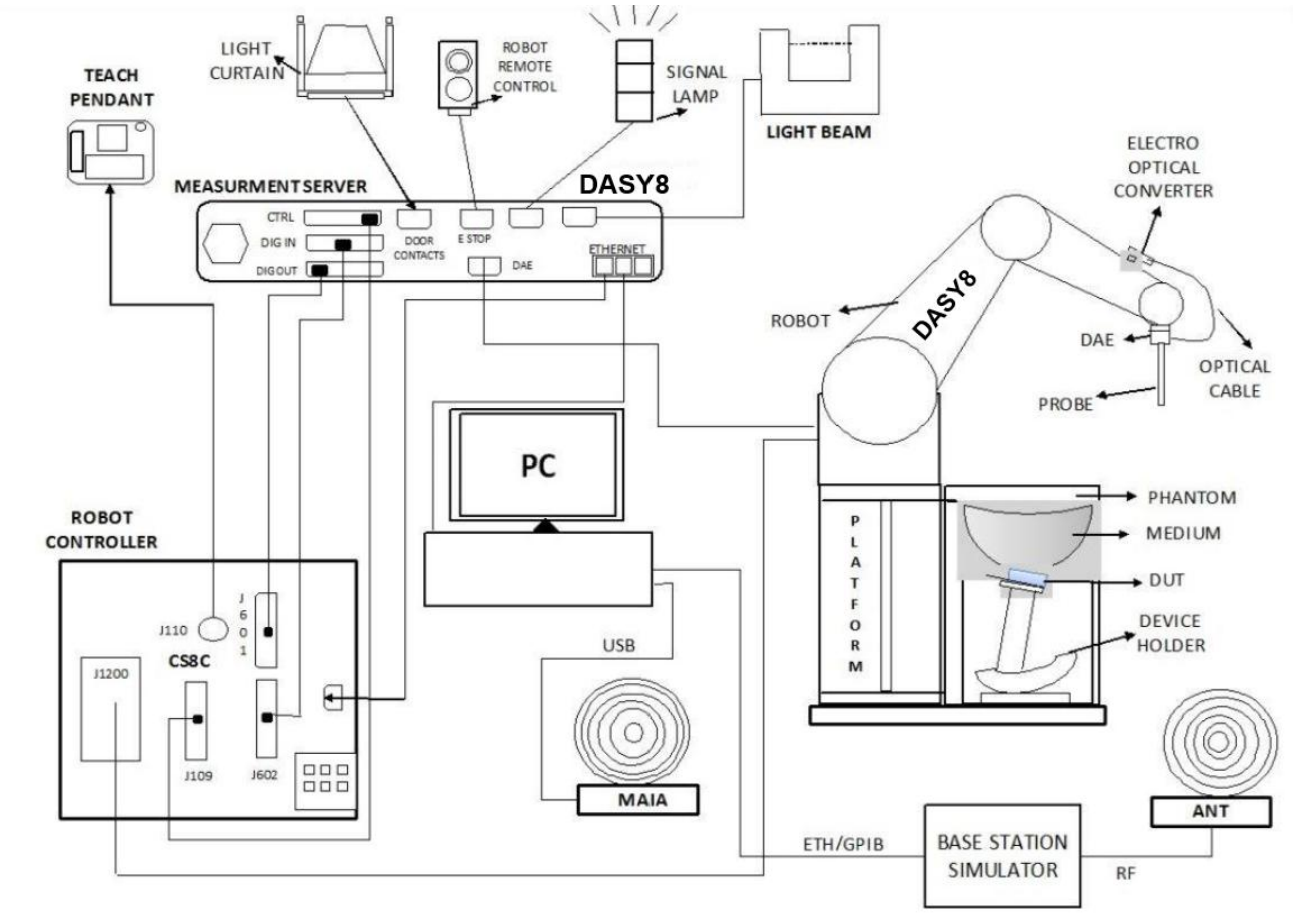

- A standard high precision 6-axis robot with controller, teach pendant and software. An arm extension for accommodating the data acquisition electronics (DAE).
- An isotropic Field probe optimized and calibrated for the targeted measurement.
- A data acquisition electronics (DAE) which performs the signal amplification, signal multiplexing, AD-conversion, offset measurements, mechanical surface detection, collision detection, etc. The unit is battery powered with standard or rechargeable batteries. The signal is optically transmitted to the EOC.
- The Electro-optical converter (EOC) performs the conversion from optical to electrical signals for the digital communication to the DAE. To use optical surface detection, a special version of the EOC is required. The EOC signal is transmitted to the measurement server.
- The function of the measurement server is to perform the time critical tasks such as signal filtering, control of the robot operation and fast movement interrupts.
- The Light Beam used is for probe alignment. This improves the (absolute) accuracy of the probe positioning.
- A computer running Windows 11 and the DASY8 software.
- Remote control and teach pendant as well as additional circuitry for robot safety such as warning lamps, etc.
- The phantom, the device holder and other accessories according to the targeted measurement.

All rights reserved. Unless otherwise specified, no part of this report may be reproduced or utilized in any part, form or by any means, electronic or mechanical, including photocopying and microfilm, without permission in writing from TOWE.

8.2 E-Field Probe

	Symmetrical design with triangular core Built-in shielding against static charges PEEK enclosure material (resistant to organic solvents, e.g., DGBE)
Calibration	ISO/IEC 17025 calibration service available.
Frequency	10 MHz to > 6 GHz Linearity: ± 0.2 dB (30 MHz to 6 GHz)
Directivity	± 0.3 dB in TSL (rotation around probe axis) ± 0.5 dB in TSL (rotation normal to probe axis)
Dynamic Range	10 µW/g to > 100 mW/g Linearity: ± 0.2 dB (noise: typically < 1 µW/g)
Dimensions	Overall length: 337 mm (Tip: 20 mm) Tip diameter: 2.5 mm (Body: 12 mm) Typical distance from probe tip to dipole centers: 1 mm

8.3 Data Acquisition Electronics (DAE)

	The data acquisition electronics (DAE) consists of a highly sensitive electrometer-grade preamplifier with auto-zeroing, a channel and gain switching multiplexer, a fast 16 bit AD-converter and a command decoder and control logic unit. Transmission to the measurement server is accomplished through an optical downlink for data and status information as well as an optical uplink for commands and the clock. The input impedance of the DAE is 200 MOhm; the inputs are symmetrical and floating. Common mode rejection is above 80 dB.

All rights reserved. Unless otherwise specified, no part of this report may be reproduced or utilized in any part, form or by any means, electronic or mechanical, including photocopying and microfilm, without permission in writing from TOWE.

8.4 Phantom

SAM Twin Phantom:

Material	Vinylester, glass fiber reinforced (VE-GF)	
Shell Thickness	2 ± 0.2 mm (6 ± 0.2 mm at ear point)	
Dimensions (incl. Wooden Support)	Length: 1000 mm Width: 500 mm Height: adjustable feet	
Filling Volume	Approx. 25 liters	
Wooden Support	SPEAG standard phantom table	

The bottom plate contains three pair of bolts for locking the device holder. The device holder positions are adjusted to the standard measurement positions in the three sections. A white cover is provided to tap the phantom during off-periods to prevent water evaporation and changes in the liquid parameters. On the phantom top, three reference markers are provided to identify the phantom position with respect to the robot.

ELI Phantom:

Material	Vinylester, glass fiber reinforced (VE-GF)	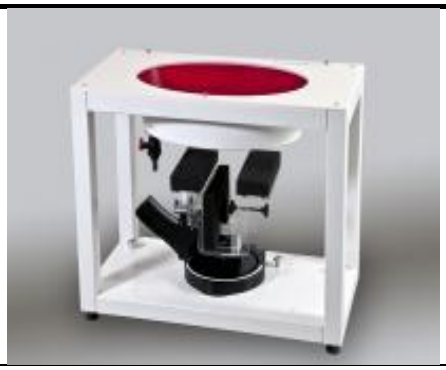
Shell Thickness	2.0 ± 0.2 mm (bottom plate)	
Dimensions	Major axis: 600 mm Minor axis: 400 mm	
Filling Volume	approx. 30 liters	
Wooden Support	SPEAG standard phantom table	

The ELI phantom is intended for compliance testing of handheld and body-mounted wireless devices in the frequency range of 30 MHz to 6 GHz. ELI4 is fully compatible with standard and all known tissue simulating liquids.

All rights reserved. Unless otherwise specified, no part of this report may be reproduced or utilized in any part, form or by any means, electronic or mechanical, including photocopying and microfilm, without permission in writing from TOWE.

8.5 Device Holder

The SAR measured in the phantom is approximately inversely proportional to the square of the distance between the source and the liquid surface. For a source at 5mm distance, a positioning uncertainty of ± 0.5mm would produce uncertainty in the SAR of ±20%. Accurate device positioning is therefore crucial for accurate and repeatable measurements. The positions at which the devices must be measured are defined by the standards. The DASY8 device holder along with the associated adaptors / options is designed to accommodate different types & sizes (laptops, tablets, phones) of test devices and yet provide accurate and repeatable positioning as described in the test standards.

The device holder is available in two configurations (see Figure 3.13.1): for hand held transmitters (mobile phones) – MD4HHTV5 – Mounting Device for Hand-Held Transmitters and for Body-Worn transmitters – MD4LAP5 – Mounting Device for laptops and other body worn transmitters.

(a) MD4HHTV5

(b) MD4LAPV5

Figure 3.13.1: Mounting Device for Hand-Held Devices and Laptop / Body-Worn Devices

All rights reserved. Unless otherwise specified, no part of this report may be reproduced or utilized in any part, form or by any means, electronic or mechanical, including photocopying and microfilm, without permission in writing from TOWE.

8.6 Measurement procedure

8.6.1 Power reference measurement

The Power Reference Measurement and Power Drift Measurement jobs are useful jobs for monitoring the power drift of the device under test in the batch process. The minimum distance of probe sensors to surface determines the closest measurement point to phantom surface. This distance cannot be smaller than the distance of sensor calibration points to probe tip as defined in the probe properties.

8.6.2 Area scan

Measurement procedures for evaluating SAR from wireless handsets typically start with a coarse measurement grid to determine the approximate location of the local peak SAR values. This is known as the area-scan procedure. In addition, identify the positions of any local maxima with SAR values within 2 dB of the maximum value, and that will not be within the zoom scan of other peaks. Additional zoom scans shall be measured for such peaks only when the primary peak is within 2 dB of the SAR compliance limit.

Area scan parameters SAR measurement as below:

Parameter	DUT transmit frequency being tested	
	$f \leq 3$ GHz	3 GHz < $f \leq 10$ GHz
Maximum distance between the measured points (geometric centre of the sensors) and the inner phantom surface (z_{M1} in Figure 20 in mm)	5 ± 1	$\delta \ln(2)/2 \pm 0{,}5$ [a]
Maximum spacing between adjacent measured points in mm (see O.8.3.1)[b]	20, or half of the corresponding zoom scan length, whichever is smaller	$60/f$, or half of the corresponding zoom scan length, whichever is smaller
Maximum angle between the probe axis and the phantom surface normal (α in Figure 20)[c]	5° (flat phantom only) 30° (other phantoms)	5° (flat phantom only) 20° (other phantoms)
Tolerance in the probe angle	1°	1°

[a] δ is the penetration depth for a plane-wave incident normally on a planar half-space.

[b] See Clause O.8 on how Δx and Δy may be selected for individual area scan requirements.

[c] The probe angle relative to the phantom surface normal is restricted due to the degradation in the measurement accuracy in fields with steep spatial gradients. The measurement accuracy decreases with increasing probe angle and increasing frequency. This is the reason for the tighter probe angle restriction at frequencies above 3 GHz.

All rights reserved. Unless otherwise specified, no part of this report may be reproduced or utilized in any part, form or by any means, electronic or mechanical, including photocopying and microfilm, without permission in writing from TOWE.

8.6.3 Zoom Scan

Zoom Scans are used to assess the peak spatial SAR values within a cubic averaging volume containing 1 g and 10 g of simulated tissue. The Zoom Scan measures points (refer to table below) within a cube whose base faces are centered on the maxima found in a preceding area scan job within the same procedure. When the measurement is done, the Zoom Scan evaluates the averaged SAR for 1 g and 10 g and displays these values next to the job's label.

Zoom Scan parameters SAR measurement as below:

Parameter	DUT transmit frequency being tested	
	$f \leq 3$ GHz	3 GHz $< f \leq 10$ GHz
Maximum distance between the closest measured points and the phantom surface (z_{M1} in Figure 20 and Table 3, in mm)	5	$\delta \ln(2)/2$ [a]
Maximum angle between the probe axis and the phantom surface normal (α in Figure 20)	5° (flat phantom only) 30° (other phantoms)	5° (flat phantom only) 20° (other phantoms)
Maximum spacing between measured points in the x- and y-directions (Δx and Δy, in mm)	8	$24/f$ [b]
For uniform grids: Maximum spacing between measured points in the direction normal to the phantom shell (Δz_1 in Figure 20, in mm)	5	$10/(f-1)$
For graded grids: Maximum spacing between the two closest measured points in the direction normal to the phantom shell (Δz_1 in Figure 20, in mm)	4	$12/f$
For graded grids: Maximum incremental increase in the spacing between measured points in the direction normal to the phantom shell ($R_z = \Delta z_2/\Delta z_1$ in Figure 20)	1,5	1,5
Minimum edge length of the zoom scan volume in the x- and y-directions (L_z in O.8.3.2, in mm)	30	22
Minimum edge length of the zoom scan volume in the direction normal to the phantom shell (L_h in O.8.3.2 in mm)	30	22
Tolerance in the probe angle	1°	1°

[a] δ is the penetration depth for a plane-wave incident normally on a planar half-space.

[b] This is the maximum spacing allowed, which might not work for all circumstances.

8.6.4 Power Drift Measurement

The Power Drift Measurement job measures the field at the same location as the most recent power reference measurement job within the same procedure, and with the same settings. The Power Drift Measurement gives the field difference in dB from the reading conducted within the last Power Reference Measurement. Several drift measurements are possible for one reference measurement. This allows a user to monitor the power drift of the device under test that must remain within a maximum variation of ±5%. Detail power drift measurement refer to appendix B.

All rights reserved. Unless otherwise specified, no part of this report may be reproduced or utilized in any part, form or by any means, electronic or mechanical, including photocopying and microfilm, without permission in writing from TOWE.

9 Test Equipment list

Manufacturer	Equipment Name	Model	Serial Number	Calibration Date	Due Date of calibration
SPEAG	Twin Phantom	SAM	2173	NCR	NCR
SPEAG	E-Field Probe	EX3DV4	7858	2026/02/20	2027/02/19
SPEAG	Data Acquisition Electronics	DAE4	1847	2026/03/17	2027/03/16
SPEAG	System Validation Kits	D2450V2	1099	2026/02/05	2029/02/04
SPEAG	Dielectric parameter probes	DAK	1199	2026/01/13	2027/01/12
Agilent	Network Analyzer	E5071B	MY42302220	2026/03/05	2027/03/04
Talent Microwave	Directional Coupler	TC-05180-10S	220420003	NCR	NCR
R&S	Signal Generator	SMR20	100648	2026/03/05	2027/03/04
QiJi	Preamplifier	YX28982302	TOWE-EQ-SR-020	NCR	NCR
QiJi	Preamplifier	YX28982301	TOWE-EQ-SR-021	NCR	NCR
R&S	Power Sensor	NRP-Z21	101651	2026/03/05	2027/03/04
R&S	Power Sensor	NRP-Z21	104189	2026/03/05	2027/03/04
HiSiDiKe	Thermometer	TP300	TOWE-EQ-SR-023	2026/03/09	2027/03/08
BingYu	Temperature and Humidity Indicator	HTC-1	TOWE-EQ-SR-025	2026/06/01	2027/05/31

Note:

1. Referring to KDB 865664 D01v01r04, the dipole calibration interval can be extended to 3 years with justification. The dipoles are also not physically damaged or repaired during the interval.

2. The justification data of dipole can be found in Appendix C. The return loss is < -20dB, within 20% of prior calibration, the impedance is within 5 ohm of prior calibration.

All rights reserved. Unless otherwise specified, no part of this report may be reproduced or utilized in any part, form or by any means, electronic or mechanical, including photocopying and microfilm, without permission in writing from TOWE.

10 SAR measurement variability

SAR measurement variability must be assessed for each frequency band, which is determined by the SAR probe calibration point and tissue-equivalent medium used for the device measurements. When both head and body tissue-equivalent media are required for SAR measurements in a frequency band, the variability measurement procedures should be applied to the tissue medium with the highest measured SAR, using the highest measured SAR configuration for that tissue equivalent medium.

The following procedures are applied to determine if repeated measurements are required.

1) Repeated measurement is not required when the original highest measured SAR is < 0.80 or 2 W/kg (1-g or 10-g respectively); steps2) through 4) do not apply.

2) When the original highest measured SAR is ≥ 0.80 or 2 W/kg (1-g or 10-g respectively), repeat that measurement once.

3) Perform a second repeated measurement only if the ratio of largest to smallest SAR for the original and first repeated measurements is > 1.20 or when the original or repeated measurement is ≥ 1.45 or 3.6W/kg (~ 10% from the 1-g or 10-g respective SAR limit).

4) Perform a third repeated measurement only if the original, first or second repeated measurement is ≥1.5 or 3.75 W/kg (1-g or 10-g respectively) and the ratio of largest to smallest SAR for the original, first and second repeated measurements is > 1.20

All rights reserved. Unless otherwise specified, no part of this report may be reproduced or utilized in any part, form or by any means, electronic or mechanical, including photocopying and microfilm, without permission in writing from TOWE.

11 System Verification

11.1 Tissue Verification

The Conductivity (σ) and Permittivity (ρ) are listed in bellow table. The temperature variation of the Tissue Simulate Liquids was 22±2°C, the liquid depth of the ear reference point or the flat phantom was at least 15 cm (which is shown in Figure 12-1).

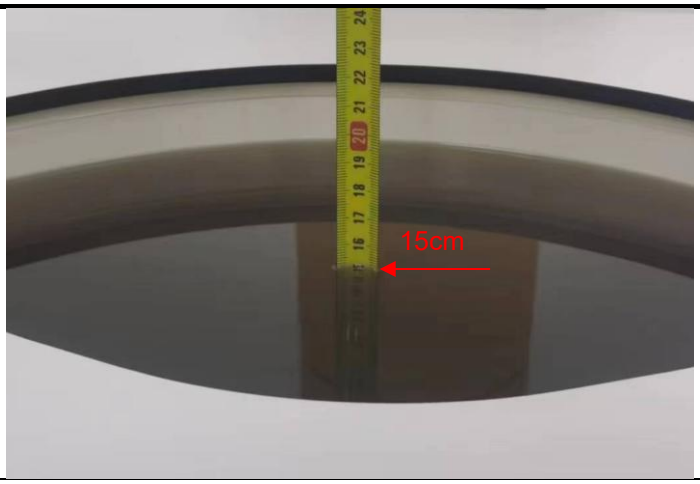

Figure 12-1 Liquid depth in the Flat Phantom

Frequency (MHz)	Tissue Type	Liquid Temp. (℃)	Target Tissue		Measured Tissue		Deviation (Limit ±5%)		Date
			Permittivity ε_r	Conductivity σ(S/m)	Permittivity ε_r	Conductivity σ(S/m)	$\Delta\varepsilon_r$	Δσ	
2450	Head	22.4	39.20	1.80	39.500	1.820	0.77%	1.11%	2026/07/29

Table 1： Measurement Tissue Parameters

All rights reserved. Unless otherwise specified, no part of this report may be reproduced or utilized in any part, form or by any means, electronic or mechanical, including photocopying and microfilm, without permission in writing from TOWE.

11.2 SAR System Check

Prior to SAR assessment, a SAR system Check measurement was performed to see if the measured SAR was within ±10% from the target SAR values. The System Performance Check Setup in Figure 12-3.

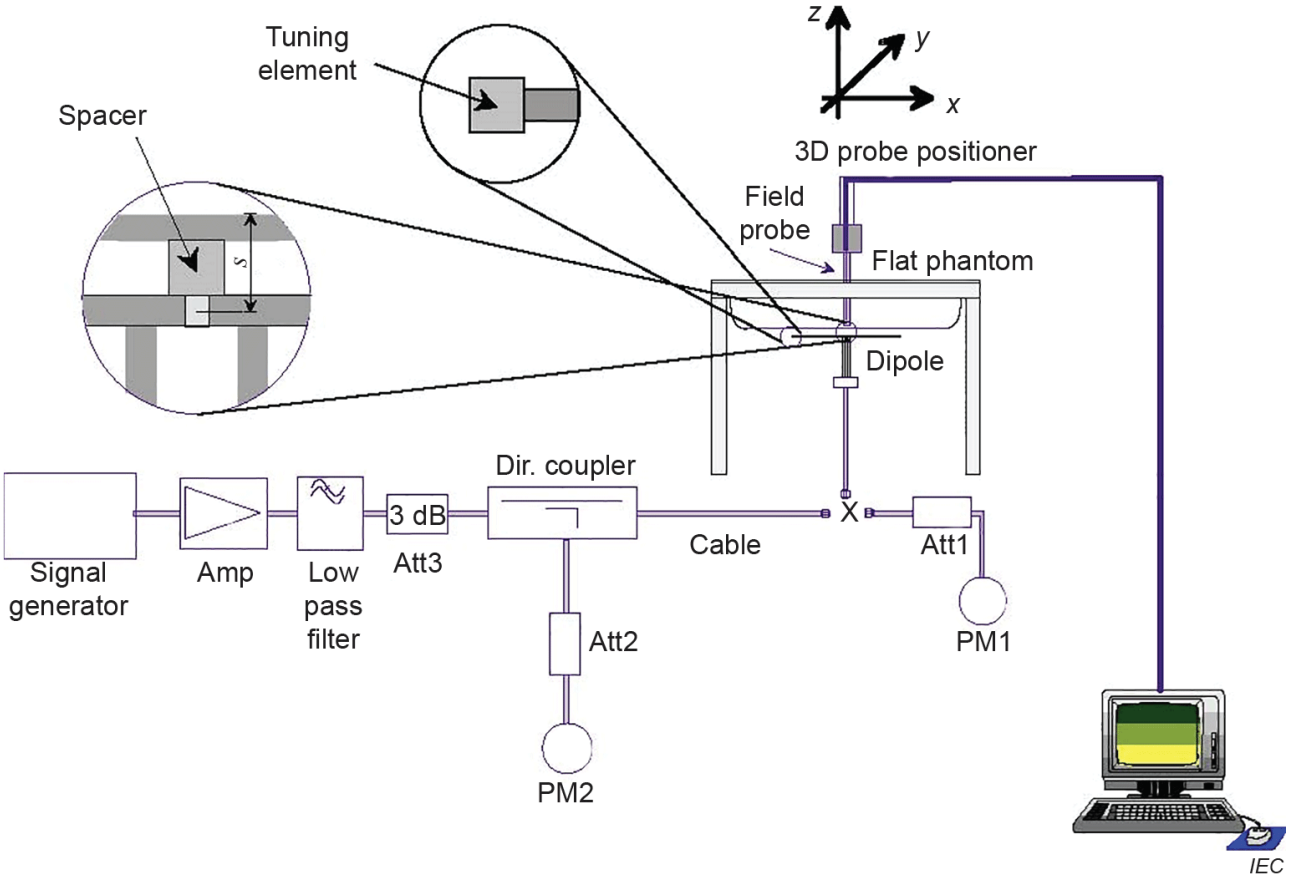

Figure 12-3 System Performance Check Setup

11.2.1 System Check Result

Frequency (MHz)	Tissue Type	Dipole	S/N	Target SAR (1W)		Measured SAR (100mW)		Measured SAR (normalized to 1W)		Deviation (Limit ±10%)		Date
				1g (W/kg)	10g (W/kg)	1g (W/kg)	10g (W/kg)	1g (W/kg)	10g (W/kg)	Δ1g	Δ10g	
2450	Head	D2450V2	1099	52.70	24.70	5.21	2.56	52.10	25.60	-1.14%	3.64%	2026/07/29

Table 2: SAR System Check Result

11.2.2 Detailed System Check Result

Please see Appendix A

All rights reserved. Unless otherwise specified, no part of this report may be reproduced or utilized in any part, form or by any means, electronic or mechanical, including photocopying and microfilm, without permission in writing from TOWE.

12 SAR General Measurement Procedures

12.1 SAR Testing with 802.11 Transmitters

The normal network operating configurations of 802.11 transmitters are not suitable for SAR measurements. Unpredictable fluctuations in network traffic and antenna diversity conditions can introduce undesirable variations in SAR results. The SAR for these devices should be measured using chipset based test mode software to ensure the results are consistent and reliable. See KDB Publication 248227 D01 for more details.

A Wi-Fi device must be configured to transmit continuously at the required data rate, channel bandwidth and signal modulation, using the highest transmission duty factor supported by the test mode tools for SAR measurement.

For WiFi SAR testing, a communication link is set up with some command for WiFi mode test. During the test, at the each test frequency channel, the EUT is operated at the RF continuous emission mode. Per KDB248227 D01, a minimum transmission duty factor of 85% is required to avoid certain hardware and device implementation issues related to wide range SAR scaling. The reported SAR must be scaled to 100% transmission duty factor to determine compliance at the maximum tune-up tolerance limit.

12.1.1 Initial Test Position Procedure

DSSS and OFDM configurations are considered separately according to the required SAR procedures. SAR is measured in the initial test position using the 802.11 transmission mode configuration required by the DSSS procedure or initial test configuration and subsequent test configuration(s) according to the OFDM procedures. The initial test position procedure is described in the following:

1. When the reported SAR of the initial test position is ≤ 0.4 W/kg, further SAR measurement is not required for the other (remaining) test positions in that exposure configuration and 802.11 transmission mode combinations within the frequency band or aggregated band. SAR is also not required for that exposure configuration in the subsequent test configuration(s).
2. When the reported SAR of the initial test position is > 0.4 W/kg, SAR is repeated for the 802.11 transmission mode configuration tested in the initial test position using subsequent highest extrapolated or estimated 1-g SAR conditions determined by area scans or next closest/smallest test separation distance and maximum RF coupling test positions based on manufacturer justification, on the highest maximum output power channel, until the reported SAR is ≤ 0.8 W/kg or all required test positions (left, right, touch, tilt or subsequent surfaces and edges) are tested.
3. For all positions/configurations tested using the initial test position and subsequent test positions, when the reported SAR is > 0.8 W/kg, SAR is measured for these test positions/configurations on the subsequent next highest measured output power channel(s) until the reported SAR is ≤ 1.2 W/kg or all required channels are tested. a) Additional power measurements may be required for this step, which should be limited to those necessary for identifying the subsequent highest output power channels.

12.1.2 Initial Test Configuration Procedure

An initial test configuration is determined for OFDM transmission modes according to the channel bandwidth, modulation and data rate combination(s) with the highest maximum output power specified for production units in each standalone and aggregated frequency band. SAR is measured using the highest measured maximum output power channel. For configurations with the same specified or measured maximum output power, additional transmission mode and test channel selection procedures are required. SAR test reduction for subsequent highest output test channels is determined according to reported SAR of the initial test configuration.
For next to the ear, hotspot mode and UMC mini-tablet exposure configurations where multiple test positions are required, the initial test position procedure is applied to minimize the number of test positions required for SAR measurement using the initial test configuration transmission mode. For fixed exposure conditions that do not have multiple SAR test positions, SAR is measured in the transmission mode determined by the initial test configuration.
When the reported SAR of the initial test configuration is > 0.8 W/kg, SAR measurement is required for subsequent next highest measured output power channel(s) in the initial test configuration until reported SAR is ≤ 1.2 W/kg or all required channels are tested.

All rights reserved. Unless otherwise specified, no part of this report may be reproduced or utilized in any part, form or by any means, electronic or mechanical, including photocopying and microfilm, without permission in writing from TOWE.

12.1.3 Subsequent Test Configuration Procedures

For OFDM configurations in each frequency Band and aggregated Band, SAR is evaluated for initial test configuration using the fixed test position or the initial test position on procedure. When the highest reported SAR (for the initial test configuration), adjusted by the ratio of the specified maximum output power of the subsequent test configuration to initial test configuration, is ⩽ 1.2 W/kg for 1g SAR and ⩽ 3.0 W/kg for 10g SAR, no additional SAR tests for the subsequent test configurations are required.

12.1.4 2.4 GHz SAR Procedures

Separate SAR procedures are applied to DSSS and OFDM configurations in the 2.4 GHz band to simplify DSSS test requirements. For 802.11b DSSS SAR measurements, DSSS SAR procedure applies to fixed exposure test position and initial test position procedure applies to multiple exposure test positions.

A) 802.11b DSSS SAR Test Requirements

SAR is measured for 2.4 GHz 802.11b DSSS using either a fixed test position or, when applicable, the initial test position procedure. SAR test reduction is determined according to the following:

1. When the reported SAR of the highest measured maximum output power channel for the exposure configuration is ⩽ 0.8 W/kg, no further SAR testing is required for 802.11b DSSS is that exposure configuration.

2. When the reported SAR is > 0.8 W/kg, SAR is required for that exposure configuration using the next highest measured output power channel. When any reported SAR is > 1.2 W/kg, SAR is required for the third channel; i.e., all channels require testing.

B) 2.4 GHz 802.11g/n OFDM SAR Test Exclusion Requirements

When SAR measurement is required for 2.4 GHz 802.11g/n OFDM configurations, the measurement and test reduction procedures for OFDM are applied (section 5.3 of of KDB248227 D01). SAR is not required for the following 2.4 GHz OFDM conditions.

1. When KDB Publication 447498 SAR test exclusion applies to the OFDM configuration.

2. When the highest reported SAR for DSSS is adjusted by the ratio of OFDM to DSSS specified maximum output power and the adjusted SAR is ≤ 1.2 W/kg.

C) SAR Test Requirements for OFDM configurations

When SAR measurement is required for 802.11 g/n OFDM configurations, each standalone and frequency aggregated band is considered separately for SAR test reduction. In applying the initial test configuration and subsequent test configuration procedures, the 802.11 transmission configuration with the highest specified maximum output power and the channel within a test configuration with the highest measured maximum output power should be clearly distinguished to apply the procedures.

All rights reserved. Unless otherwise specified, no part of this report may be reproduced or utilized in any part, form or by any means, electronic or mechanical, including photocopying and microfilm, without permission in writing from TOWE.

13 Conducted Power

WIFI 2.4G			
Test Mode	**Test Channel**	**Average Conducted Power(dBm)**	**Tune up (dBm)**
11b	2412	**14.08**	14.5
	2437	**14.21**	
	2462	**13.68**	
11g	2412	10.03	10.5
	2437	10.13	
	2462	9.56	
11n20	2412	9.75	10.5
	2437	9.82	
	2462	9.28	

All rights reserved. Unless otherwise specified, no part of this report may be reproduced or utilized in any part, form or by any means, electronic or mechanical, including photocopying and microfilm, without permission in writing from TOWE.

14 SAR Data Summary

General Notes:

1) The Highest Reported SAR Plot refer to Appendix B.

2) Per KDB 447498 D01, testing of other required channels within the operating mode of a frequency band is not required when the reported 1g or 10g SAR for the mid-band or highest output power channel is:

- ≤ 0.8W/kg for 1g or 2.0W/kg for 10g respectively, when the transmission band is ≤ 100MHz.
- ≤ 0.6 W/kg or 1.5 W/kg, for 1g or 10g respectively, when the transmission band is between 100 MHz and 200MHz.
- ≤ 0.4 W/kg or 1.0 W/kg, for 1g or 10g respectively, when the transmission band is ≥ 200MHz.

14.1 SAR Measurement Result of WIFI 2.4G

Antenna Retracted									
Test position	**Mode**	**Ch./Freq. (MHz)**	**SAR (W/kg) 1-g**	**Duty Cycle**	**Duty Cycle Scaling Factor**	**Conducted Power (dBm)**	**Tune up Limit (dBm)**	**Scaling Factor**	**Reported 1g SAR (W/kg)**
Body 5mm									
Front side	802.11b	6/2437	0.039	98.00%	1.020	14.21	14.50	1.069	0.043
Back side	802.11b	6/2437	0.276	98.00%	1.020	14.21	14.50	1.069	0.301
Left side	802.11b	6/2437	0.005	98.00%	1.020	14.21	14.50	1.069	0.005
Right side	802.11b	6/2437	0.004	98.00%	1.020	14.21	14.50	1.069	0.004
Top side	802.11b	6/2437	0.238	98.00%	1.020	14.21	14.50	1.069	0.260
Bottom side	802.11b	6/2437	0.004	98.00%	1.020	14.21	14.50	1.069	0.004
Back side	802.11b	1/2412	0.269	98.00%	1.020	14.08	14.50	1.102	0.302
Back side	802.11b	11/2462	0.325	98.00%	1.020	13.68	14.50	1.208	**0.400**
Antenna Rotated									
Test position	**Mode**	**Ch./Freq. (MHz)**	**SAR (W/kg) 1-g**	**Duty Cycle**	**Duty Cycle Scaling Factor**	**Conducted Power (dBm)**	**Tune up Limit (dBm)**	**Scaling Factor**	**Reported 1g SAR (W/kg)**
Body 5mm									
Front side	802.11b	6/2437	0.151	98.00%	1.020	14.21	14.50	1.069	0.165
Back side	802.11b	6/2437	0.466	98.00%	1.020	14.21	14.50	1.069	0.508
Left side	802.11b	6/2437	0.002	98.00%	1.020	14.21	14.50	1.069	0.002
Right side	802.11b	6/2437	0.049	98.00%	1.020	14.21	14.50	1.069	0.053
Top side	802.11b	6/2437	0.057	98.00%	1.020	14.21	14.50	1.069	0.062
Bottom side	802.11b	6/2437	0.003	98.00%	1.020	14.21	14.50	1.069	0.003
Back side	802.11b	1/2412	0.450	98.00%	1.020	14.08	14.50	1.102	0.506
Back side	802.11b	11/2462	0.496	98.00%	1.020	13.68	14.50	1.208	**0.611**

Table 3： SAR of WIFI 2.4G.

All rights reserved. Unless otherwise specified, no part of this report may be reproduced or utilized in any part, form or by any means, electronic or mechanical, including photocopying and microfilm, without permission in writing from TOWE.

15 Measurement Uncertainty

Per KDB 865664 D01 SAR measurement 100MHz to 6GHz, when the highest measured 1-g SAR within a frequency band is < 1.5 W/kg and the measured 10-g SAR within a frequency band is < 3.75 W/kg. The expanded SAR measurement uncertainty must be ≤ 30%, for a confidence interval of k = 2. If these conditions are met, extensive SAR measurement uncertainty analysis described in IEEE Std 1528-2013 is not required in SAR reports submitted for equipment approval.

16 Calibration Certificate

Please see the Appendix C

17 Test Setup Photos

Please see the Appendix D

Appendix A: System Check Plots

Appendix B: SAR Test Plots

Appendix C: Calibration certificate

Appendix D: Test Setup Photos

--- The End ---

All rights reserved. Unless otherwise specified, no part of this report may be reproduced or utilized in any part, form or by any means, electronic or mechanical, including photocopying and microfilm, without permission in writing from TOWE.