10.1"PAD

User Manual

Please read this manual carefully for proper usage before using.
It is recommended to keep this manual properly for future check.

Machine structure map

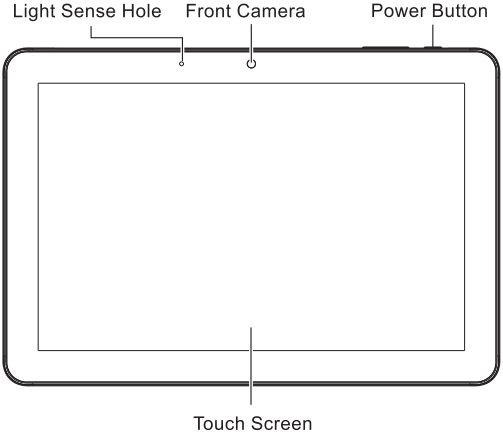

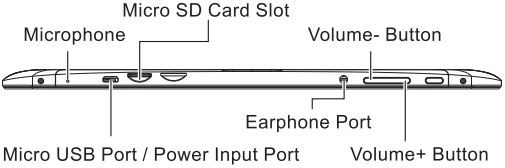

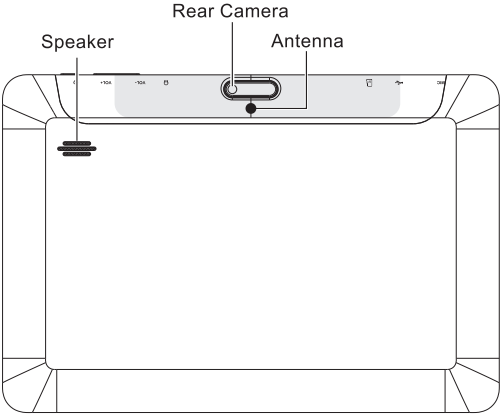

Warm Tips:

1. Do not cover antenna area with hands or other objects, otherwise it may influence signal.

2. The machine schematic structure may be slightly different with real object, please prevail with the real object .

Turn on/off the machine

Press and hold the power button for a few seconds to turn on /off the machine.

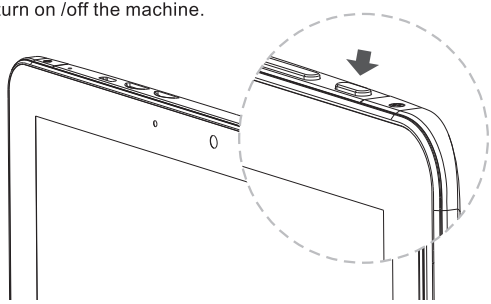

Screenshot

Press the power button and VOL- key simultaneously to capture a screenshot, which will be saved in **USB storage** > **Pictures** > **Screenshots.**

Battery Charging

Charging machine battery when using it for the first time or battery is not used for a long time. Use the power adapter matched with the machine, plug the adapter power socket in 100-240VAC socket, then plug adapter output port to machine power input port. When the charging is normal, the icon in the status bar indicates charging battery; when the charging is finished, the status

bar will prompt electric quantity 100%. Disconnect the machine and charger, take off the charger from the machine first, and then unplug it from the electrical outlet.

Tips:

1. Use manufacture approved charger or the charger matched with machine model; unauthorized power adapter or data cable may cause charger exploding or damage the machine.

2. The device uses Micro USB interface for power input, and supports charging through USB interface of PC.

Important Safety Attentions

Thank you for purchasing our high performance & multi-function tablet PC. It will bring you a better visual & aural experience. To ensure safety, extend the service life of the product, and give full play to the best performance of the product, please read all the instructions and nameplates carefully, follow the safety attentions, and keep the user manual for future use.

Medical Device

Electromagnetic waves produced by the device in working condition may interfere with the normal operation of implantable medical devices or personal medical devices such as pacemakers, embedding cochlea, hearing-aids, etc. If you are using the above mentioned medical devices, please consult the manufacturer for the conditions or limitations of using the product.

Hearing Protection

● Please do not wear earphone without plugging it to video source first. Turn down volume of the device before putting the earplugs into ears.

● To avoid damaging hearing, it is suggested that you use the lowest volume when listening to music or making a voice call using the earphones.

● Please do not use earplugs for a prolonged period of time.

Traffic Safety

● Please do not use the device when crossing the road, riding a bicycle, motorbike, or any similar means of transportation, or when driving a motor vehicle. Doing so may cause you to become distracted and may result in accidents.

● Wireless devices may interfere with the flight system of a plane. Therefore, please comply with relevant rules of airline companies. Turn off the device in places where wireless devices are prohibited.

Operation Environment

● Only used in safe area with altitude under 5000m.

● Please do not use the device in places that have a water source such as bathtubs, pools, washing machines. The device should not be used in moist basements and other similar environments, etc. If the device has been splashed, turn it off immediately. Do not use it until it has been dried properly.

● To avoid internal circuit fault of the device, please do

not charge or use the device in places which are dusty, moist or dirty or near magnetic fields.

● Please do not store or transport the device in the same container with flammable liquids, flammable gases or explosives.

● Please turn off the device in places where the use of wireless devices is expressly prohibited.

● Working environment temperature for the device is -5℃ ~ 35℃ . Please do not use the device when the temperature is above or below this range, otherwise, fault may occur.

Child Health

The device and its accessories may include several small parts. Please keep them out of reach of children to prevent accidental damage to the device or its accessories, and to prevent accidental swallowing by children which may result in apnea or other danger.

Environment Protection

Please comply with the local laws of disposing of the device, battery and or its accessories, and support recycling. Do not dispose the device, its battery and or its accessories as ordinary household garbage.

Accessory Requirement

Only use the charger and accessories authorized by the device manufacturer and compatible with the model number of the device. The use of any other type of chargers and or accessories may violate the guarantee

clause and related provisions of the state in which the device is being used and may result in safety accidents. If authorized batteries, chargers and or accessories are needed, please contact the dealers of this device.

Safety Use of Battery and Charger

● When charging has been completed, or when the device is not being charged, please disconnect the charger from the device and from the power socket.

● Do not place the device near heating devices such as microwave ovens, ovens, radiators, etc. Overheated battery may cause explosion.

● Do not remove or refit batteries as this may cause battery leakage, overheating, fire or explosion.

● If the battery leaks, do not allow the leaking liquid contact with your skin or eyes. If such contact does occur, wash the affected area thoroughly with clean water and seek medical attention.

● If the power cord of the charger has been damaged, do not continue to use it, so as to avoid electric shock or fire.

Maintenance

● Please keep the device and its accessories dry. Do not use external heating devices such as microwave ovens to dry them.

● Do not allow the device and its accessories to become impacted intensively by falling or any other means, nor to become shocked, as this may cause damage to the device or its accessories, fire or explosion

of the batteries.

● Do not place the device and its accessories in areas with very high or very low temperature, as this may cause device or battery accident, explosion, fire, or other damages, battery function will be limited when temperature is under 0℃.

● Do not place sharp metal objects such as large headed pins near to the device as they may become magnetically attached to the speaker and may result in damage when the device is being used.

● Do not use strong chemicals, cleaner or detergent to clean the device or its accessories. Before cleaning or maintenance, please turn off the device and disconnect the charger from the device.

● Do not disassemble the device and its accessories by yourself; the damage caused in this case will not be covered by maintenance.

● If the device falls or is exposed to any external force which causes screen damaged or broken, do not touch or try to remove the broken part. Stop using the device. Seek immediate assistance for maintenance.

Screen Protection

● Do not place any objects on the device, to avoid laceration.

● Do not use a sharp object to touch the screen.

Proper Use

Use the machine properly; please do not be over

indulge in the cyber world and games. Long time spends on internet and game is harmful to physical and mental health.

Troubleshooting

■ **Your device can not be turned on.**

The battery power is used up. Please fully charge your device.

■ **Your device can not access to the Internet via Wi-Fi.**

1. Check whether your device can receive any Wi-Fi signal.

2. Check whether the wireless router supports DHCP. If not, please configure a static IP address.

3. Check whether the wireless router has been connected to the Internet.

■ **Your device responds to operations slowly.**

1. Check whether too many applications are running in the backstage.

2. Check whether any incompatible-version application has been installed.

3. Use the antivirus software to scan and kill the malicious programs (if any).

■ **Your device gets warm in use.**

It is normal that your device gets warm in a long-time use or in charging.

■ **Your device crashes and its keys do not work.**

Press and hold the power switch for 6 seconds, and the system will turn off and restart automatically.

■ **The total memory is smaller than the theoretical memory.**

A certain space has been used to store the system files and install user applications, so it appears that the total memory is smaller than the theoretical memory.

■ **Some video files can not be played.**

Your device supports most of the common audio and video file formats, except a few special formats. We suggest that you download a third-party player from the application market to play those

Important Statements

All contents and services obtained through your device shall belong to a third party under the protection of copyright, patent, trademark or other intellectual properties, and shall be used for your personal non-commercial purposes only. You are not allowed to use any content or service in any way without the authorization of the content or service provider.

In no case shall we be held liable for any direct, indirect or accidental loss or damage caused by your accessing any content, service, information or third-party software through your device.

Third-party services are subject to change, deletion or may stop without prior notice. We shall not imply or assure that all services and contents will be kept available at all time.

We shall not be responsible for providing any related customer service for any third-party service or content. Please refer your questions and service requests directly to the relevant content or service provider.

Please remember to backup the data when using your device. We shall not be held liable for any personal data loss or damage caused by software or hardware misoperation, product repair, battery replacement or any other unexpected situations, or for any other indirect loss arising thereof. Any misunderstandings in relation to this

Manual shall be beyond our control. Consequently, we shall not bear any liability for any accidental loss caused by the use of this Manual or for any third-party claim caused by the use of your device.

Trademark

"Android" is the trademark of Google Inc.

"Micro SD" is the trademark of SD Card Association.

Other company names, product names or services may be also the registered trademarks of other companies, and shall be subject to the applicable laws, regulations and international conventions, whether indicated and marked on the product and in this Manual or not.

CE Statement

Notices for the use of pad

Your pad is a product of superior design and craftsmanship and should be treated with care. The following suggestions can help you comply with the terms of repair kits, to extend the life of your pad.

1) Place the mobile pad and its parts and components out of reach of small children.

2) Keep the pad dry. Rain, humidity and all types of liquids which contain minerals will corrode electronic circuits.

3) Don’t touch the pad with wet hands when charging, it will cause electric shock or damage the pad.

4) Avoid placing the device in high temperature environment. High temperatures will shorten the life of electronic devices, damage batteries, and warp or melt certain plastics. Avoid placing the device in significantly low temperature environments. When the temperature rises, the pad will produce water vapor that may damage electronic circuit.

5) Avoid placing the pad in dusty or dirty places, otherwise parts may be damaged.

6) To avoid damage to the pad, do not place it near a lit cigarette, an open flame or any other heat source.

7) Do not open the device, non-professional approach will cause damage to the pad.

8) Do not shake the pad or throw it from high places. handling the pad roughly can damage internal circuit boards.

9) Do not paint the pad, as paint will block headphones, microphones or other removable parts, and cause the

part or the device to stop working.

10) Use clean, soft, dry cloth to clean the camera and light sensor lenses. Do not use of harmful chemicals, cleaning agents or cleaning fluids to clean the pad.

11) If mobile pad, battery, charger, or mobile pad accessories are defective, send to the nearest qualified service center for inspection.

12) If necessary, Service Centre staff will assist you and will arrange for pad repairs.

13) To prevent possible hearing damage, do not listen at high volume levels for long periods

Caution:

Use the Mobile pad in an environment with temperature between -5℃ and 35℃ , For the following equipment: Mobile pad is in compliance with the essential requirements and other relevant provisions of Directive 1999/5/EC.

The earphones should be used carefully. Excessive sound pressure from earphones and headphones can cause hearing loss.

The product shall only be connected to a USB interface of version USB 2.0 or higher. The connection to a power USB is prohibited.

Adapter shall be installed near the equipment and shall be easily accessible.

The device complies with RF specifications when the device used at 0 mm form your body.

Risk of explosion if battery Is replaced by an incorrect type.

Dispose of used batteries according to the instructions.

The plug considered a disconnect device of adapter.

Federal Communications Commission (FCC) Interference Statement
This equipment has been tested and found to comply with the limits for a Class B digital device, pursuant to Part 15 of the FCC Rules.

These limits are designed to provide reasonable protection against harmful interference in a residential installation. This equipment generate, uses and can radiate radio frequency energy and, if not installed and used in accordance with the instructions, may cause harmful interference to radio communications.

However, there is no guarantee that interference will not occur in a particular installation. If this equipment does cause harmful interference to radio or television reception, which can be determined by turning the equipment off and on, the user is encouraged to try to correct the interference by one of the following measures:

- Reorient or relocate the receiving antenna.
- Increase the separation between the equipment and receiver.
- Connect the equipment into an outlet on a circuit different from that to which the receiver is connected.
- Consult the dealer or an experienced radio/TV technician for help.

This device complies with Part 15 of the FCC Rules. Operation is subject to the following two conditions:
(1)This device may not cause harmful interference, and (2) this device must accept any interference received, including interference that may cause undesired operation.

FCC Caution: Any changes or modifications not expressly approved by the party responsible for compliance could void the user’s authority to operate this equipment.

RF exposure warning
This equipment complies with FCC radiation exposure limits set forth for an uncontrolled environment.
The equipment must not be co-located or operating in conjunction with any other antenna or transmitter.