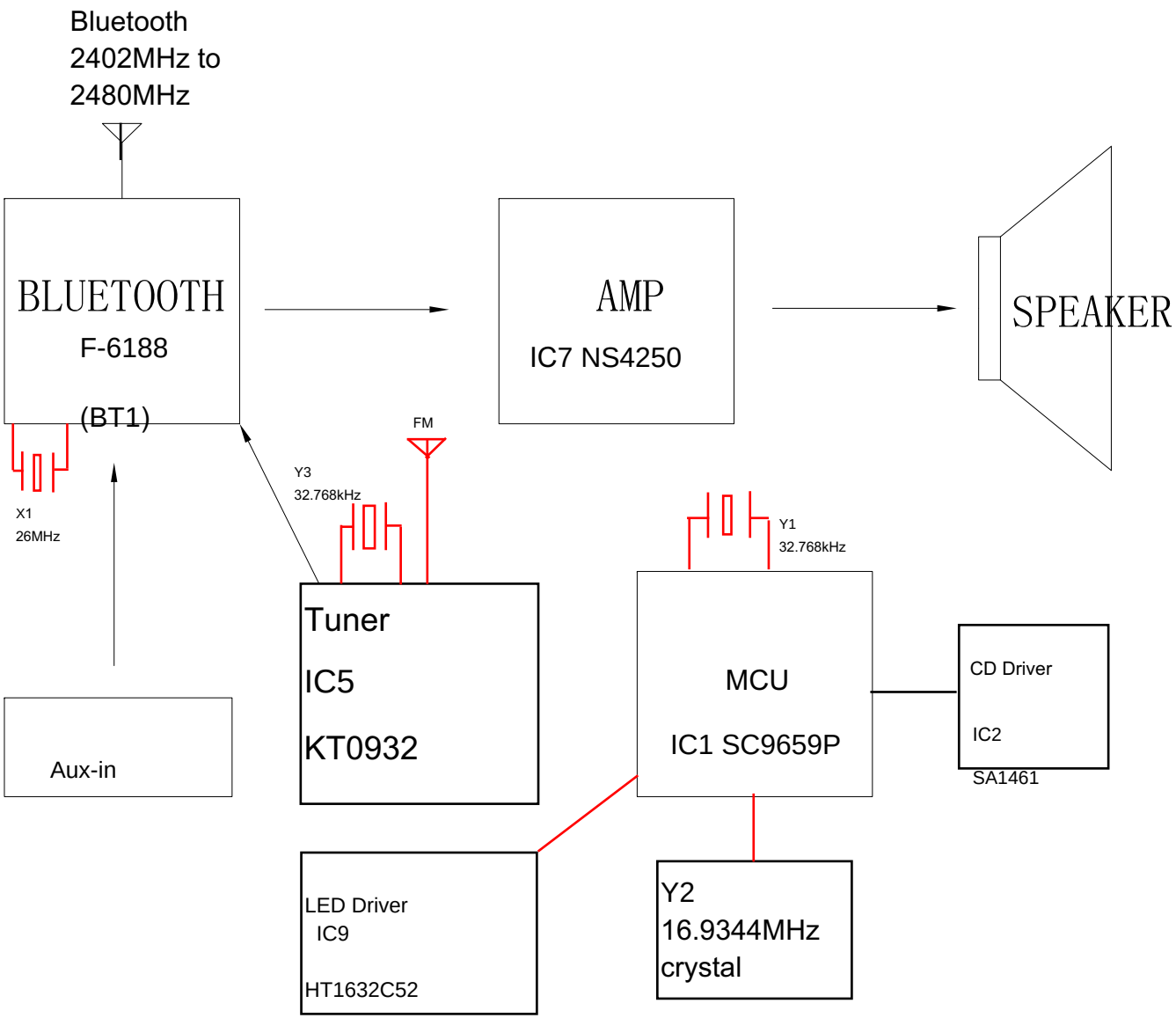
Bluetooth
2402MHz to
2480MHz
BLUETOOTH
F-6188
(BT1)
AMP
IC7 NS4250
SPEAKER
X1
26MHz
Y3
32.768kHz
FM
Y1
32.768kHz
Tuner
IC5
KT0932
MCU
IC1 SC9659P
CD Driver
IC2
SA1461
Aux-in
LED Driver
IC9
HT1632C52
Y2
16.9344MHz
crystal

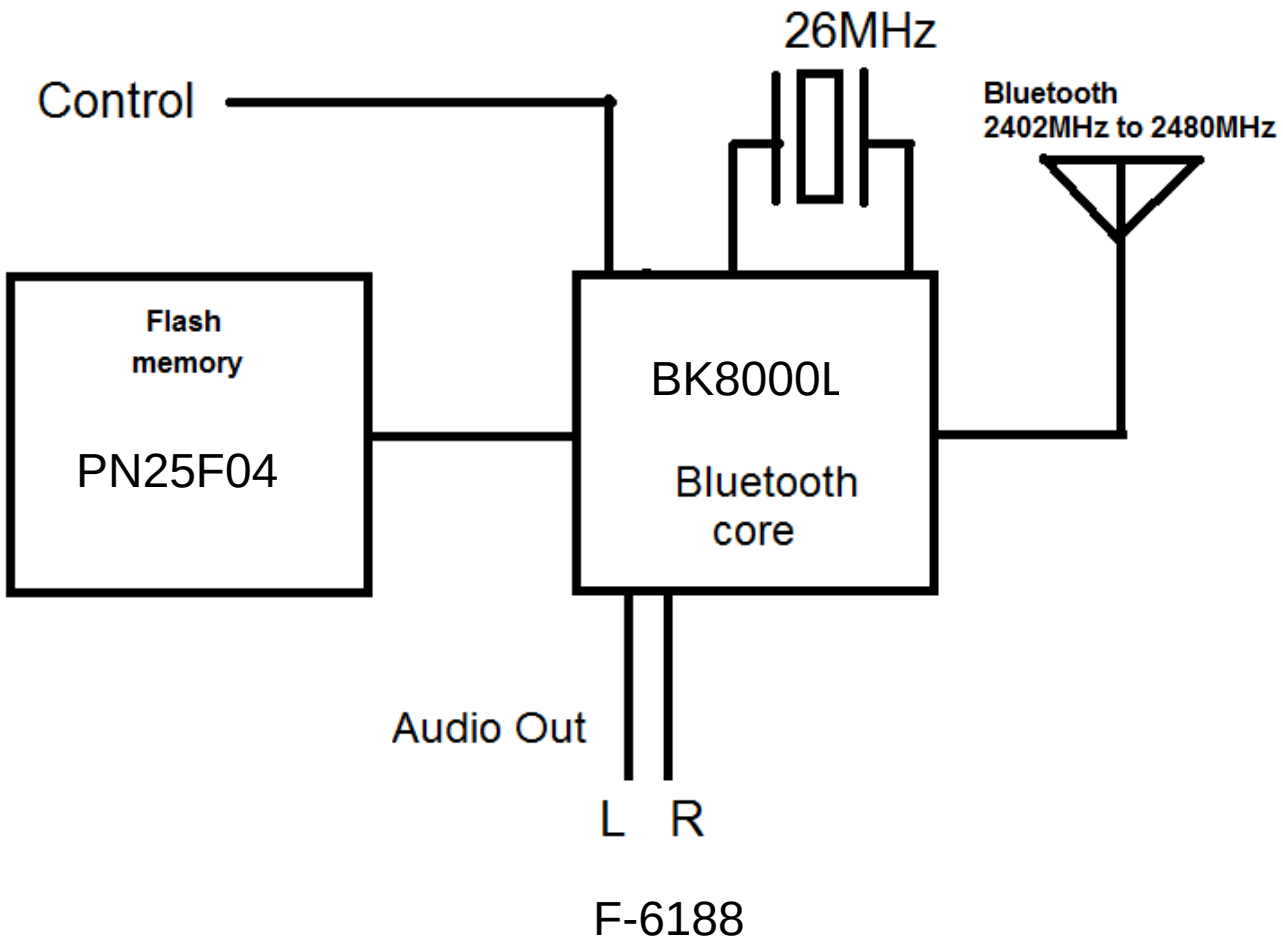

F-6188

Bluetooth Module
Block Diagram

1. General Description

The BK8000L chip is a highly integrated single-chip Bluetooth audio device. It integrates the high-performance transceiver, rich features baseband processor, and Bluetooth audio profile. The BK8000L cache based architecture enables it is fully programmable with any application, that it may be used for control and multimedia hybrid application. The internal dual stereo ADC converts the stereo line in input to digital audio that enables the line in use the digital equalizer. Hardware equalizer and accelerator offload the MCU, and make it suitable for low power headset application.

1.1. Features

- Operation voltage from 2.8 V to 4.2 V
- Bluetooth 2.1+EDR compliant
- -92 dBm sensitivity for 2 Mbps mode and 5 dBm transmit power
- A2DP v1.2, AVRCP v1.0 and HFP v1.5 profile
- Integrated 96 dB SNR stereo ADC and stereo DAC
- Five bands hardware equalizer
- Digital equalizer for stereo line in
- Hardware accelerator for low power
- Full duplex hands-free speakerphone
- Up to 250 mA charge controller

1.2. Applications
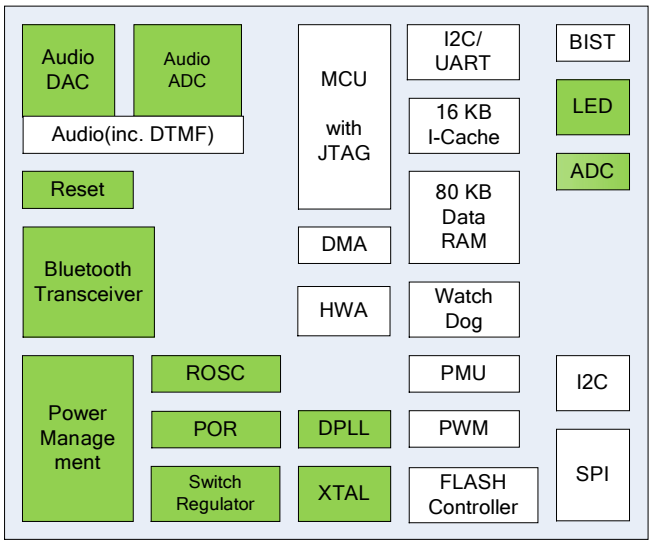
- Bluetooth stereo speaker
- Bluetooth stereo headset
- Bluetooth control and multimedia hybrid