iTrak by Encore

STEREO 3CD MINI HI-FI SYSTEM WITH SUBWOOFER AND PLL RADIO BLUETOOTH AND USB CHARGING

MODEL : BT9279MO

INSTRUCTION MANUAL

USB PLL TUNING EQ EFFECT Bluetooth COMPACT disc DIGITAL AUDIO

The lightning flash with arrowhead symbol, within an equilateral triangle is intended to alert the user to the presence of uninsulated dangerous voltage within the product is enclosure that may be of sufficient magnitude to constitute a risk of electric shock to persons.	**CAUTION** **RISK OF ELECTRIC SHOCK DO NOT OPEN** CAUTION TO REDUCE THE RISK OF ELECTRIC SHOCK, DO NOT REMOVE COVER (OR BACK). NO USER-SERVICEABLE PARTS INSIDE. REFER SERVICING TO QUALIFIED SERVICE PERSONEL.	The exclamation point within an equilateral triangle is intended to alert the user to the presence of important operating and maintenance (servicing) instructions in the literature accompanying the appliance.

IMPORTANT SAFETY INSTRUCTIONS

1. Read these instructions.
2. Keep these instructions.
3. Heed all warnings.
4. Follow all instructions.
5. Do not use this apparatus near water.
6. Clean only with dry cloth.
7. Do not block any ventilation openings. Install in accordance with the manufacturer's instructions.
8. Do not install near any heat sources such as radiators, heat registers, stoves, or other apparatus (including amplifiers) that product heat.
9. Do not defeat the safety purpose of the polarized or grounding-type plug. A polarized plug has two blades with one wider than the other. A grounding type plug has two blades and a third grounding prong. The wide blade or the third prong is provided for your safety. If the provided plug does not fit into your outlet, consult an electrician for replacement of the obsolete outlet.
10. Protect the power cord from being walked on or pinched particularly at plugs, convenience receptacles, and the point where they exit from the apparatus.
11. Only use attachments/accessories specified by the manufacturer.
12. Use only with a cart, stand, tripod, bracket, or table recommended by the manufacturer, or sold with the product. When a cart is used, use caution when moving the cart/apparatus combination to avoid injury from tip-over.

13. Unplug this apparatus during lightning storms or when unused for a long periods of time.
14. Refer all servicing to qualified service personnel. Servicing is required when the apparatus has been damaged in any way, such as power-supply cord or plug is damaged, liquid has been spilled or objects have fallen into the apparatus, the apparatus has been exposed to rain or moisture, does not operate normally, or has been dropped.
15. This appliance shall not be exposed to dripping or splashing water and that no object filled with liquids such as vases shall be placed on the apparatus.
16. Do not overload wall outlet. Use only power source as indicated.
17. Use replacement part as specified by the manufacturer.
18. Upon completion of any service or repairs to this product, ask the service technician to perform safety checks.
19. Power Sources - This product should be operated only from the type of power source indicated on the marking label. If you are not sure of the type of power supply to your home, consult your product dealer or local power company. For products intended to operate from battery power, or other sources, refer to the operating instruction.

20. Object and Liquid Entry - Never push objects of any kind into this product through openings as they may touch dangerous voltage points or short-out parts that could result in a fire or electric shock. Never spill liquid of any kind on the product.
21. Damage Requiring Service - Unplug this product from the wall outlet and refer servicing to qualified service personnel under the following conditions:

a) When the power-supply cord or plug is damaged,
b) If liquid has been spilled, or objects have fallen into the product,
c) If the product has been exposed to rain or water,
d) If the product does not operate normally by following the operating instructions. Adjust only those controls that are covered by the operating instructions as an improper adjustment of other controls may result in damage and will often require extensive work by a qualified technician to restore the product to its normal operation.
e) If the product has been dropped or damaged in any way, and
f) When the product exhibits a distinct change in performance - this indicates a need for service.

22. Mains plug is used as disconnect device and it should remain readily operable during intended use. In order to disconnect the apparatus from the mains completely, the mains plug should be disconnected from the mains socket outlet completely.
23. Battery shall not be exposed to excessive heat such as sunshine, fire or the like.
24. Excessive sound pressure from earphones and headphone can cause hearing loss.
25. Minimum distances of 10 cm around the apparatus for sufficient ventilation.
26. The ventilation should not be impeded by covering the ventilation openings with items, such as newspapers, table-cloths, curtains, etc.
27. No naked flame sources, such as lighted candles, should be placed on the apparatus.
28. The use of apparatus in moderate climates.
29. Attention should be drawn to the environmental aspects of battery disposal

This symbol indicates that this product incorporates double insulation between hazardous mains voltage and user accessible parts.

CAUTION:
TO PREVENT ELECTRIC SHOCK, MATCH WIDE BLADE OF AC PLUG TO WIDE SLOT. FULLY INSERT.

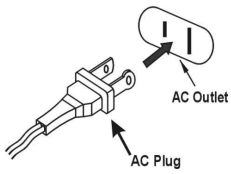

SAVE THESE INSTRUCTIONS

COMPLIANCE WITH FCC REGULATIONS

FCC ID: RQU-HF630PB

This device complies with Part 15 of the FCC Rules. Operation is subject to the following two conditions:

(1) This device may not cause harmful interference, and

(2) This device must accept any interference received, including interference that may cause undesired operation.

This equipment has been tested and found to comply with the limits for a Class B Digital Device, pursuant to Part 15 of the FCC Rules. These limits are designed to provide reasonable protection against harmful interference in a residential installation. This equipment generates, uses and can radiate radio frequency energy and, if not installed and used in accordance with the instructions, may cause harmful interference to radio communications. However, there is no guarantee that interference will not occur in a particular installation. If this equipment does cause harmful interference to radio or television reception, which can be determined by turning the equipment off and on, the user is encouraged to try to correct the interference by one or more of the following measures:

- Reorient or relocate the receiving antenna.
- Increase the separation between the equipment and receiver.
- Connect the equipment into an outlet on a circuit different from that to which the receiver is connected.
- Consult the dealer or an experienced radio/TV technician for help.

WARNING

Changes or modifications to this unit not expressly approved by the party responsible for compliance could void the user's authority to operate the equipment.

CAUTION

CLASS 1 LASER PRODUCT

CLASS 1 LASER PRODUCT
APPAREIL LASER DE CLASSE 1
PRODUCTO LASER DE CLASE 1

CAUTION
INVISIBLE LASER RADIATION
WHEN OPEN AND INTERLOCKS DEFEATED.
AVOID EXPOSURE TO BEAM

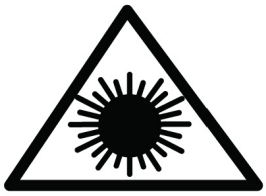

This product contains a low power laser device.

Follow the advice below for safe operations.

ON PROTECTION AGAINST LASER ENERGY EXPOSURE

- As the laser beam used in this compact disc player is harmful to the eyes, do not attempt to disassemble the casing.
- Stop operation immediately if any liquid or solid object should fall into the cabinet.
- Do not touch the lens or poke at it. If you do, you may damage the lens and the player may not operate properly.
- Do not put anything in the safety slot. If you do, the laser diode will be ON when the CD door is still open.
- If the unit is not to be used for a long period of time, make sure that all power sources are disconnected from the unit. Remove all batteries from the battery compartment.
- This unit employs a laser. The use of controls or adjustment or performance of procedures other than those specified here may result in exposure to hazardous radiation.

Should any trouble occur, remove the power source and refer servicing to qualified personnel.

BATTERY INSTALLATION

The battery compartment is located on the back of the remote control.

1. Remove the battery compartment door by pressing in on the tab and lifting it off.
2. Insert two (2) AAA size batteries (not included) into the battery compartment as the polarity markings inside the battery compartment.
3. Replace the battery compartment door.

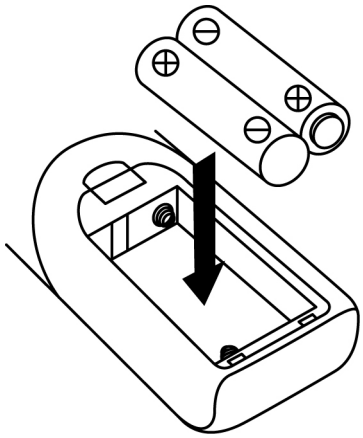

BATTERY PRECAUTIONS

Follow these precautions when using a battery in this device:

1. Use only the size and type of battery specified.
2. Be sure to follow the correct polarity when installing the battery as indicated in the battery compartment. A reversed battery may cause damage to the device.
3. Do not mix different types of batteries together (e.g. Alkaline and Carbon-zinc) or old batteries with fresh ones.
4. If the batteries in the device are consumed or the device is not to be used for a long period of time, remove the battery to prevent damage or injury from possible battery leakage.
5. Do not try to recharge the battery not intended to be recharged; it can overheat and rupture. (Follow battery manufacturer’s directions.)
6. Do not dispose of batteries in fire or sunshine. Battery may explodes or leak.
7. Clean the battery contacts and also those of the device prior to battery installation.

LOCATION OF CONTROLS

1-3) DISC 1,2,3 SELECTOR
4) CD OPEN BUTTON
5) STANDBY/ON BUTTON
6) SLEEP/TIMER BUTTON
7) X-BASS BUTTON
8) MEM/CLK-ADJ BUTTON
9) PLAY MODE BUTTON
10) PRESET UP/DOWN BUTTON
11) STOP/ST-MONO BUTTON
12) SKIP DOWN BUTTON
13) USB PORT
14) DISC SKIP BUTTON
15) STANDBY INDICATOR
16) LCD DISPLAY
17) FUNCTION BUTTON
18) REMOTE SENSOR
19) VOLUME KNOB
20) EQ BUTTON
21) PLAY/PAUSE BUTTON
22) SKIP UP BUTTON
23) HEADHONE JACK
24) AUX IN JACK
25) FM ANTENNA
26) SUB-WOOFER TERMINAL
27) SPEAKER/ TERMINAL
28) AC LINE CORD

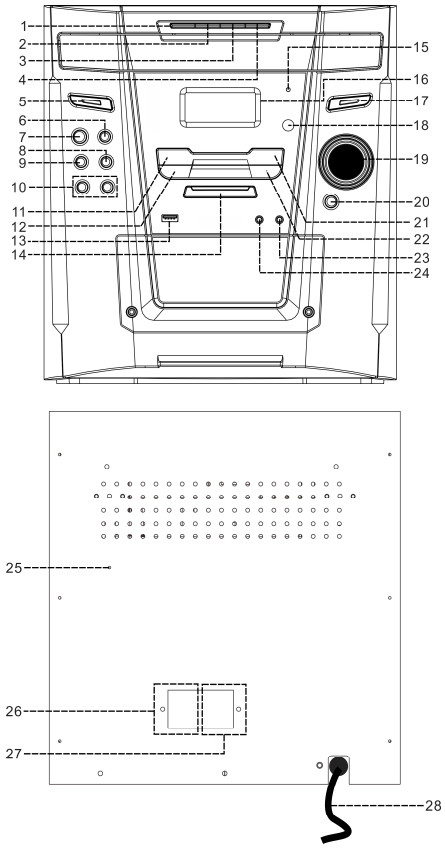

CAUTION:

USAGE OF CONTROLS OR ADJUSTMENTS OR PERFORMANCE OF PROCEDURES OTHER THAN THOSE SPECIFIED HEREIN MAY RESULT IN HAZARDOUS RADIATION EXPOSURE.

THIS UNIT SHOULD NOT BE ADJUSTED OR REPAIRED BY ANYONE EXCEPT QUALIFIED SERVICE PERSONNEL.

IMPORTANT:

SINCE MOVEMENT OF THE CD MECHANISM AND THE SENSITIVE CIRCUITY MAY CAUSE INTERFERENCE TO THE RADIO TUNER NEARBY, SWITCH THIS UNIT OFF WHILE OPERATING OTHER RADIO DEVICES.

PRECAUTIONS FOR USE

INSTALLATION

- UNPACK ALL PARTS AND REMOVE PROTECTIVE MATERIAL.
- DO NOT CONNECT THE UNIT TO THE MAINS BEFORE CHECKING THE MAINS VOLTAGE AND BEFORE ALL OTHER CONNECTIONS HAVE BEEN MADE.
- DO NOT COVER ANY VENTS AND MAKE SURE THAT THERE IS A SPACE OF SEVERAL CENTIMETERS AROUND THE UNIT FOR VENTILATION.

CONNECTION

1. CONNECT THE POWER CORD (28) TO AC OUTLET AND SWITCH ON THE MAIN POWER SWITCH AT THE BACK OF UNIT.
2. WHEN YOU FIRST PLUG THE UNIT INTO THE MAINS, THE LCD DISPLAY (16) WILL LIGHT UP FOR FEW SECONDS AND THEN ENTER STANDBY MODE.
3. CONNECT THE SPEAKER WIRE (RED TO RED/BLACK TO BLACK) TO THE SPEAKER TERMINAL (27) LOCATED AT THE REAR SIDE OF THE UNIT. CONNECT THE SUB-WOOFER WIRE (PURPLE TO PURPLE/BLACK TO BLACK) TO THE SUB-WOOFER TERMINAL (26) LOCATED AT THE REAR SIDE OF THE UNIT.
4. TURN ON THE UNIT BY ON BUTTON (5). IF THE LCD DISPLAY (16) IS ON WITH BACKLIGHTING, IT MEANS THE POWER SUPPLY IS NORMAL. NOW YOUR SYSTEM IS READY TO PLAY THE MUSIC.

SETTING THE CLOCK

1. SET UNIT IN STANDBY MODE.
2. PRESS THE “MEM/CLK-ADJ” BUTTON (8), THE FIRST DIGIT OF “00” IS FLASHING. PRESS SKIP UP ⏭ OR DOWN ⏮ BUTTON (22,12) TO SET THE CORRECT HOUR (24 HOURS FORMAT). PRESS ”MEM/CLK-ADJ” BUTTON (8) TO STORE THE CORRECT HOUR.
3. THE OTHER TWO DIGITS OF “00” IS FLASHING, PRESS THE SKIP UP ⏭ OR DOWN ⏮ BUTTON (22,12) TO SET THE CORRECT MINUTES. PRESS “MEM/CLK-ADJ” (8) TO STORE THE CORRECT MINUTE.

➢ **THE PRE-SET TIME WILL BE RE-SET COMPLETELY IF SWITCHING OFF THE MAIN POWER BUTTON ON SYSTEM. YOU ARE RECOMMENDED TO SWITCH THE SYSTEM INTO STANDBY MODE FOR CONVENIENCE USAGE.**

LISTENING TO RADIO

MANUAL TUNING

1. PRESS “FUNCTION” BUTTON (17) TO SELECT TUNER.
2. TUNE TO THE REQUIRED STATION BY PRESSING THE TUNING UP OR DOWN BUTTON (22,12).
3. ADJUST VOLUME KNOB (19) TO THE DESIRED VOLUME LEVEL .

AUTO TUNING

1. PRESS “FUNCTION” BUTTON (17) TO SELECT TUNER.
2. PRESS AND HOLD THE TUNING UP OR DOWN BUTTON (22,12) FOR 1-2 SECONDS AND THEN RELEASE
3. THE UNIT WILL START SEEKING AUTOMATICALLY AND STOP UNTIL A RADIO STATION IS REACHED.
4. REPEAT STEP 2 & 3 UNTIL THE DESIRED RADIO STATION IS BEING REACHED.
5. ADJUST VOLUME KNOB (19) TO THE DESIRED VOLUME LEVEL.

PRESET STATIONS

YOU CAN STORE UP TO TOTAL OF 20 RADIO STATIONS IN THE MEMORY.

1. SET TO RADIO MODE
2. TURN TO THE DESIRED RADIO STATION BY “ MANUAL” OR “AUTO” TUNING METHOD.
3. PRESS “MEM/CLK-ADJ” BUTTON (8) TO ENABLE PROGRAM STATE AND MEMORY POSITION “00” IS FLASHING.
4. PRESS “PRE-UP “ OR “ PRE-DN” BUTTON (10) TO SELECT MEMORY POSITION (FROM 1 – 20).
5. PRESS “MEM/CLK-ADJ” BUTTON (8) AGAIN TO CONFIRM THE SETTING.
6. REPEAT STEP 2 TO 5 TO STORE OTHER STATIONS.
7. PRESS “PRE-UP “ OR “ PRE-DN” BUTTON (10) TO SELECT THE PRESET STATIONS IN ORDER.
8. TO RETURN NORMAL TUNER MODE, LEAVE KEYS FREE.

- **THE PRE-SET MEMORIES WILL BE CANCELLED COMPLETELY IF AC POWER WAS DISCONNECTED. YOU ARE RECOMMENDED TO SWITCH THE SYSTEM INTO STANDBY MODE FOR CONVENIENCE USAGE.**
- THE PROGRAM MODE WILL RETURN TO NORMAL MODE IF THERE IS NO BUTTON BEING PRESSED IN 3 SECONDS.
- YOU CAN OVERWRITE A PRESENT STATION BY STORING ANOTHER FREQUENCY IN ITS PLACE.

FM & FM-STEREO RECEPTION

- PRESS THE “ MONO-ST/REPEAT ” BUTTON (11) REPEATEDLY, THE FM PROGRAMS ARE RECEIVING IN MONO AND STEREO MODE REPEATEDLY. IN PARTICULAR WHEN STEREO SIGNALS ARE WEAK. IT IS PREFERABLE TO RECEIVE THE PROGRAM IN MONO.
- IF STEREO SIGNAL IS BEING RECEIVED, THE “ST” INDICATOR “ (ST) ” WILL APPEAR ON LCD (16) TO SHOW FM STEREO PROGRAM IS NOW RECEIVING.

HINTS FOR BEST RECEPTION:-

- FM : THE RECEIVER HAS A BUILD-IN FM WIRE ANTENNA (25) HANGING AT THE REAR CABINET. THIS WIRE SHOULD BE TOTALLY UNRAVELED AND EXTENDED FOR THE BEST RECEPTION.

PLAYING COMPACT DISC

GETTING START

1. PRESS FUNCTION BUTTON (17) TO SELECT CD MODE.
2. PRESS “OPEN/CLOSE” BUTTON (4) TO OPEN THE CD DOOR.
3. PLACE A CD WITH THE PRINTED SIDE FACING UP INSIDE THE TRAY.
4. PRESS THE “ (DISC) “ BUTTON (14) OR “ DISC SKIP “ BUTTON ON REMOTE TO TURNING THE CD TRAY, AND LOADING OUT THE OTHER DISC COMPARMENT.
5. PRESS THE “OPEN/CLOSE” BUTTON (4) TO CLOSE THE CD DOOR.
6. CD SEARCH IS PERFORMING, THE LCD DISPLAY (16) WILL SHOW THE TOTAL NUMBER OF DISC, NUMBER OF TRACKS & PLAYING TIME OF DISC.

NOTED : CD SEARCHING WILL BE PERFORMAED EVERYTIME WHEN SWITCHING TO CD MODE OR CLOSING THE CD DOOR. ALL CD FUNCTIONS WILL BE RESPONSED ONLY AFTER THE CD SEARCHING IS COMPLETED. IT NEED ABOUT 1 MINUTES TO COMPLETE THE FOCUS SEARCH.

PLAY / PAUSE MODE►II

1. PRESS THE “PLAY/PAUSE” BUTTON (21) TO START PLAYBACK, THE FIRST TRACK OF THE FIRST DISC WILL BE PLAYED AND THE PLAY INDICATOR WILL APPEAR ON THE LCD DISPLAY.
2. OR PRESS EITHER THE “ DISC 1 ” , “ DISC 2 ” , “ DISC 3 ” BUTTON (1-3), UNIT WILL PLAY THE DISC INSIDE THE DESIRE TRAY DIRECTLY.
3. TO INTERRUPT, PRESS THE “PLAY/PAUSE” BUTTON (21) ONCE, AND THE DISPLAY WILL START FLASHING. PRESS AGAIN TO RELEASE & RESUME PLAYBACK.

STOP MODE■

1. IF “STOP” BUTTON (11) IS PRESSED DURING PLAY OR PAUSE MODE, SYSTEM WILL GO TO STOP MODE.

- **SKIP MODE (SKIP UP▶▶I/SKIP DOWNI◀◀)**

1. DURING PLAY OR PAUSE MODE, IF SKIP UP BUTTON (22) IS PRESSED IT WILL GO TO NEXT TRACK AND DISPLAY THE TRACK NO. AND THEN REMAIN THE PLAY OR PAUSE MODE.
2. DURING PLAY OR PAUSE MODE, IF SKIP DOWN BUTTON (12) IS PRESSED. IT WILL GO BACK TO THE BEGINNING OF THE TRACK, ORIGIANL TRACK NO. IS DISPLAY AND REMAIN THE PLAY OR PAUSE MODE.
3. AFTER STEP 2, PRESS SKIP DOWN BUTTON (12) AGAIN WILL GO TO THE PREVIOUS TRACK AND REMAIN THE PLAY OR PAUSE MODE.

- **SEARCH MODE (SEARCH UP+/SEARCH DOWN-)**

1. DURING PLAY MODE, IF SKIP UP BUTTON (22) IS PRESSED & HOLD FOR FEW SECONDS, IT WILL START SEARCHING FORWARD.
2. DURING PLAY MODE, IF " SKIP DOWN BUTTON (12) IS PRESSED & HOLD FOR FEW SECONDS. IT WILL STAR SEARCHING BACKWARDS.

- **REPEAT MODE**

PRESS THE " PLAY MODE " BUTTON (9) DURING PLAYBACK TO SELECT REPEAT AND RANDOM FUNCTION, A SINGLE TRACK, ALL THE TRACKS REPEAT AND RANDOM CAN BE PLAYED IN DIFFERENCE MODE AS FOLLOW:-

FOR CD

(1) REPEAT ALL DICS → (2) REPEAT ONE DISC → (3) REPEAT ONE → (4) OFF MODE

PLAY MODE	INDICATOR ON LCD DISPLAY
REPEAT ALL DISC	↻ & ALL DISC
REPEAT ONE DISC	↻ & ONE DISC
REPEAT ONE	↻ & ONE
OFF MODE	----------

CD DISC PROGRAMMING

UP TO 60 TACKS CAN BE PROGRAMMED FOR DISC PLAY IN ANY ORDER. BEFORE USE, BE SURE TO PRESS THE " CD STOP " BUTTON (11)

1. SET IN CD MODE & STOP THE CD PLAYBACK.
2. PRESS THE "MEM/CLK-ADJ" BUTTON (8) " MEMMORY " WILL APPEAR ON LCD DISPLAY (16) AND FLASHING.
3. SELECT A DESIRED DISC AND TRACK BY PRESSING DISC 1,2,3 BUTTON (1-3) AND SKIP UP▶▶I OR DOWN I◀◀ BUTTONS (22,12) DIRECTLY. AND THE POSITION OF MEMORY " P-01 " WILL START FLASHING.
4. PRESS THE "MEM/CLK-ADJ" BUTTON (8) TO STORE THE TRACE INTO MEMORY.
5. REPEAT STEPS 3 AND 4 TO ENTER ADDITIONAL TRACKS INTO THE MEMORY IF NECESSARY.
6. WHEN ALL THE DESIRED TRACKS HAVE BEEN PROGRAMMED, PRESS CD " PLAY/PAUSE " BUTTON (21) TO START PLAYBACK IN ORDER.
7. PRESS " CD STOP" BUTTON (11) TO STOP PLAYBACK & PRESS AGAIN TO CANCEL ALL STORED PROGRM, AND " MEMORY " INDICATOR WILL DISAPPEAR ON LCD DISPLAY (16).

➢ AFTER PROGRAM COMPLETE, PRESS " MEM/CLK-ADJ " BUTTON (8) REPEATEDLY TO REVIEW THE TRACKS BEING PROGRAMMED.

BLUETOOTH CONNECTING AND PLAYBACK

1. PRESS THE FUNCTION BUTTON (17) TO SELECT " BLUETOOTH (BT) " MODE.
2. THE LCD DISPLAY WILL FLASHING "BT", IT MEANS THE BLUETOOTH IN NON CONNECTION / SEARCHING MODE.
3. SWITCH ON THE BLUETOOTH FEATURE OF YOUR BLUETOOTH DEVICE(SUCH AS MOBILE PHONE) AND SELECT "BT9279" BLUETOOTH EQUIPMENT TO CONNECTING.
4. ONCE THE CONNECTING WAS FINISH AND CONNECT SUCCESSFULLY, THE LCD DISPLAY (16) WILL CHANGE TO SHOW "BT".
5. START TO PLAYBACK YOUR BLUETOOTH DEVICE AND ENJOY THE MUSIC BY THE MAIN UNIT.
6. TO CONNECT ANOTHER BT DEVICE, PRESS THE AND HOLD THE " PLAY/PAUSE ▶II " BUTTON (21) TO DISCONNECT THE EXISTING CONNECTED BT DEVICE, LCD DISPLAY WILL FLASHING "PAIRING" AGAIN, REPEAT STEP 3 & 4 TO CONNECT ANOTHER BT DEVICE.

USB CHARGING

1. THIS UNIT CAN PROVIDE DC5V/2.1A FOR ANOTHER ELECTRONIC DEVICE CHARGING (SUCH AS MOBILE PHONE) THROUGH USB PORT (13).
2. USB CHARGING WAS AVAILABLE DURING UNIT IN STANDBY MODE.

REMARK : DUE TO FIRMWARE/SOFTWARE OF MOBILE PHONE WAS VARIOUS AND UPDATE TIME TO TIME, MAYBE SOME OF MOBILE PHONE CANNOT COMPACTIBLE WITH CHARGING FUNCTION. THIS IS NOT THE MALFUNCTION.

MORE FEATURES

A. SLEEP SETTING

1. PRESS & HOLD THE " SLEEP " BUTTON ON REMOTE CONTROL, TO ACTIVE & ADJUST THE SLEEP TIMER IN THE ORDER OF 90 > 80 >70….10 MINUTES AUTOMATICALLY.
2. SYSTEM WILL STOP AND GOTO STANDBY MODE AUTOMATICALLY AFTER THE SELECTED TIMING.
3. TO CANCEL THE SLEEP MODE, PRESS THE " SLEEP " BUTTON ONCE UNTIL " SLEEP " INDICATOR DISAPPEAR.

B. TIMER SETTING

THIS FUNCTION ALLOWS THE SYSTEM TO TURN ON AUTOMATICALLY AND WAKE YOU UP BY MUSIC FROM CD, TUNER.

* BEFORE SET THE TIMER, PLEASE ENSURE THE CURRENT CLOCK TIME WAS SETTED REFER THE CLOCK SETTING SECTION

1) ENTER TIMER SET MODE : PRESS AND HOLD " TIMER " BUTTON (6) TO ENTER SETTING MODE, ON WILL FLASH AT DISPLAY.
2) ON TIME SETTING : PRESS " MEM/CLK-ADJ. " (8) & THEN PRESS SKIP UP ▶▶I/ DOWN I◀◀ " BUTTON (12/22) TO SET THE HOUR & THEN PRESS " MEM/CLK-ADJ " BUTTON (8) TO ENTER THE HOURS. PRESS SKIP UP ▶▶I/ DOWN I◀◀ " BUTTON (12/22) TO SET MINUTES AND PRESS " MEM/CLK/ADJ " BUTTON (8) TO STORE THE TIMER ON TIME.
3) OFF TIME SETTING : PRESS "TIMER" (6) THEN PRESS " MEM/CLK-ADJ. (8) & THEN PRESS SKIP UP ▶▶I/ DOWN I◀◀ " BUTTON (12/22) TO SET THE HOUR & THEN PRESS " MEM/CLK-ADJ " BUTTON (8) TO ENTER THE HOURS. PRESS SKIP UP ▶▶I/ DOWN I◀◀ " BUTTON (12/22) TO SET MINUTES AND PRESS " MEM/CLK/ADJ " BUTTON (8) TO STORE THE TIMER OFF TIME.
4) MODE : PRESS "TIMER" (6) THEN PRESS " MEM/CLK-ADJ. (8) & THEN PRESS SKIP UP ▶▶I/ DOWN I◀◀ " BUTTON (12/22) TO SELECT THE TIMER ON MODE (CD/TUNER) THEN " MEM/CLK/ADJ " BUTTON (8) TO STORE THE TIMER ON MODE.

REMARK

- IF THERE IS NO MUSIC SOURCE BEING DETECTED (FROM CD) WHEN THE PRESET TIME IS REACHED, SYSTEM WILL SELECT TUNER MODE AUTOMATICALLY.
- FOR TUNER MODE, IT WILL BE PRESET AUTOMATICALLY AND FOLLOW THE LAST RADIO STATION BEING LISTENED JUST BEFORE POWER OFF IN THE LAST TIME.

● ACTIVE/DE-ACTIVE TIMER FUNCTION (BY REMOTE CONTROL)

1. PRESS THE " SLEEP/TIMER " BUTTON ON REMOTE CONTROL ONCE AT STANDBY MODE & THE TIMER INDICATOR IS SHOWN ON LCD DISPLAY (1).
2. TO CANCEL ALARM FUNCTION BY PRESS AGAIN "SLEEP/TIMER" BUTTON UNTIL THE TIMER INDICATOR " " DISAPPEAR

C. PRESETS EQ FUNCTION

THIS UNIT PROVIDES 5 DIFFERENCES SOUND MODE TO ENHANCE YOUR LISTENING EXPERIENCE. YOU CAN SELECT THE DESIRED EFFECT BY PRESSING THE "EQ" BUTTON (17) REPEATEDLY AT FOLLOWING SEQUENCE:-

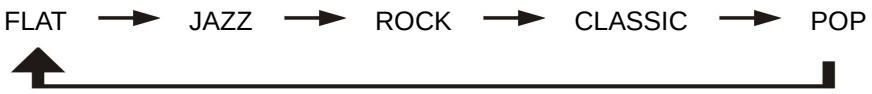

D. X-BASS FUNCTION

PRESS THE X-BASS BUTTON (23) TO ACTIVE X-BASS FUNCTION, THE DISPLAY WILL SHOW " XBAS ON " AND " XBAS OFF " TO REPRESENT X-BASS FUNCTION ON AND OFF RESPECTIVELY.

E. MUTE FUNCTION (ON REMOTE ONLY)

PRESS TO TERMINATE THE SOUND OUTPUT FROM SYSTEM TEMPORARILY AND PRESS AGAIN TO CANCEL THIS MODE.

REMOTE CONTROL TRANSMITTER
CONTROL FUNCTIONS

BATTERY INSTALLATION (BATTERY NOT PROVIDED)
THE INFRA-RED TRANSMITTER REQUIRE 2 PCS “ AAA “ BATTERY FOR OPERATION

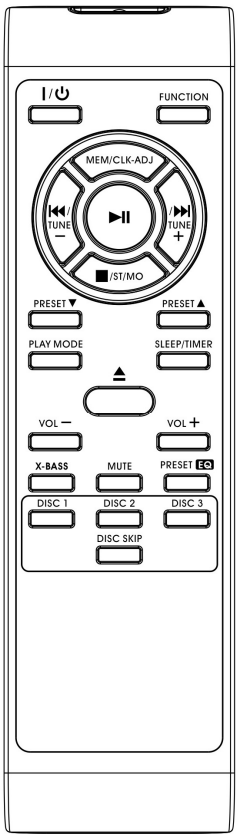

BUTTON DESCRIPTION

POWER	PRESS TO SWITCH THE SYSTEM INTO STANDBY MODE
FUNCTION	PRESS TO SELECT DIFFERENT FUNCTION MODE
CLK-ADJ/MEMORY	IN STANDBY MODE : PRESS TO ACTIVE CLOCK SETTING IN TUNER MODE : PRESS TO PRE-SET RADIO MEMORY IN CD : PRESS TO ACTIVE PROGRAMMING FUNCTION
SKIP UP/DOWN	IN CD/SD/USB MODE : TO SELECT PREVIOUS / NEXT TRACK IN TUNER MODE : PRESS TO STEP UP/DOWN OF BAND FREQUENCY IN CLOCK SETTING : PRESS TO SELECT HOUR AND MINUTES
PLAY/PAUSE▶II	IN CD MODE, PRESS ONCE TO START PLAYBACK. PRESS ONCE AGAIN TO STOP PLAYBACK TEMPORARILY
STOP■	IN MODE, PRESS TO TERMINATE THE PLAYBACK IN TUNER MODE, PRESS TO SELECT FM MONO/STEREO
PRE-UP / PRE-DN	IN TUNER MODE : PRESS TO CALL OUT THE PRESET MEMORY IN ORDER UP OR DOWN
PLAY MODE	IN CD MODE : PRESS TO ACTIVE THE REPEAT FUNCTION
TIMER/SLEEP	TIMER MODE : PRESS TO SET THE TIMER MODE ON OR OFF PLAYBACK MODE : PRESS TO SET THE SLEEP TIMER
OPEN/CLOSE	IN CD MODE, OPEN/CLOSE THE CD TRAY
VOLUME -/+	PRESS TO CONTROL VOLUME UP OR DOWN
BASS	PRESS TO ACTIVE OR DE-ACTIVE X-BASS FUNCTION
MUTE	PRESS TO ACTIVE MUTE FUNCTION
EQ	PRESS TO SELECT DIFFERENCE EQ MODE
DISC 1,2,3	PRESS TO SELECT THE DISC FOR PLAYBACK DIRECTLY, AFTER CLOSING THE CD DOOR
DISC SKIP	PRESS TO SELECT THE NEXT DESIRE DISC AND ROTATE THE DISC TRAY

SPECIFICATION

Power Requirement

Main unit:	AC120V~ 60Hz
Remote control	2 x 1.5V “AAA” size batteries (not included)

Frequency Range

Radio Band	FM 87.5 ~ 108 MHz

Output Power

Speaker (RMS):	2x40 Watts
Subwoofer (RMS):	2x50 Watts
Total P.M.PO:	800 Watts

USB Port

Charging Port:	5V/2.1A

CARB statement:

" The products indicated in this shipment were produced with medium quality fiberboard. We hereby certify that these products were produced in compliance with the applicable California emission standards specified in Section 93120.2(a) of the ATCM to Reduce Formaldehyde from Composite Wood Products. "

iTrak
by Encore

3-YEAR LIMITED WARRANTY

ELECTRO BRAND INC. (EBINC) warrants to the original consumer of this *iTrak* by Encore product that it will furnish a replacement for, or, at its sole option, repair any part which proves (upon inspection by EBINC) to be defective under normal use within 3 years of the original purchase date.

This warranty does not apply to appearance items, including, but not limited to, antennas, knobs, cabinets or cases, and in the case of batteries, for damage caused by leaking batteries. It also does not apply to the product, or to any part thereof, that has been damaged through misuse or negligence.

Furthermore, this warranty will become invalid if, in the judgment of EBINC the product or any part thereof has been installed incorrectly, repaired or altered by other than EBINC Warranty Service Department.

This warranty gives you specific legal rights and you may also have other rights which vary from state to state. Some states do not allow the exclusion or limitation of incidental or consequential damages or limitations on how long an implied warranty lasts, so the above exclusions and limitations may not apply to you.

For Service, Warranty, or Product Information,
Please contact the Electro Brand, Inc.,
Customer Service Department at:

Distributed by Electro Brand Inc.
Westchester, IL 60154
1-800-982-3954, Ext. 117

between the hours of 8:00 a.m. and 4:00 p.m. Central Standard Time
Monday through Friday.

PLEASE SAVE THIS CARD TOGETHER WITH ORIGINAL DATED PROOF OF PURCHASE FOR YOUR RECORDS AND FOR CUSTOMER SERVICE.

Date purchased _____ Model number _____