# All in one Music System

# TCD-386WEBT

# INSTRUCTION MANUAL

MP3 PLAYBACK Bluetooth USB COMPACT disc DIGITAL AUDIO ENCODE TURNTABLE

# WARNING

TO PREVENT FIRE OR SHOCK HAZARD, DO NOT USE THIS PLUG WITH AN EXTENSION CORD, RECEPTACLE OR OTHER OUTLET UNLESS THE BLADES CAN BE FULLY INSERTED TO PREVENT BLADE EXPOSURE. TO PREVENT FIRE OR SHOCK HAZARD, DO NOT EXPOSE THIS APPLIANCE TO RAIN OR MOISTURE.

| | | |
|---|---|---|
| The lightning flash with arrowhead symbol, within an equilateral triangel is intended to alert the user to the presence of uninsulated dangerous voltage within the product is endosure that may be of sufficient magnitude to constitute a risk of electric shock to persons. | CAUTION<br>RISK OF ELECTRIC SHOCK<br>DO NOT OPEN<br>CAUTION: TO REDUCE THE RISK OF ELECTRICSHOCK, DO NOT REMOVE COVER (OR BACK).NO USER-SERVICEABLE PARTS INSIDE. REFERSERVICING TO QUALIFIED SERVICE PERSONEL. | The exclamation point within an equilateral triangel is intended to alert the user to the presence of important operating and maintenance (servicing) instructions in the literature accomoanying the appliance. |

THE CAUTION MARKING AND RATING LABEL ARE LOCATED AT THE BOTTOM OF THE UNIT

## IMPORTANT SAFETY INSTRUCTIONS

1. Read these instructions.
2. Keep these instructions.
3. Heed all warnings.
4. Follow all instructions.
5. Do not use this apparatus near water.
6. Clean only with dry cloth.
7. Do not block any ventilation openings. Install in accordance with the manufacturer's instructions.
8. Do not install near any heat sources such as radiators, heat registers, stoves, or other apparatus (including amplifiers) that product heat.
9. Do not defeat the safety purpose of the polarized or grounding-type plug. A polarized plug has two blades with one wider than the other. A grounding type plug has two blades and a third grounding prong. The wide blade or the third prong is provided for your safety. If the provided plug does not fit into your outlet, consult an electrician for replacement of the obsolete outlet.
10. Protect the power cord from being walked on or pinched particularly at plugs, convenience receptacles, and the point where they exit from the apparatus.
11. Only use attachments/accessories specified by the manufacturer.
12. Use only with a cart, stand, tripod, bracket, or table recommended by the manufacturer, or sold with the product. When a cart is used, use caution when moving the cart/apparatus combination to avoid injury from tip-over.

13. Unplug this apparatus during lightning storms or when unused for a long periods of time.
14. Refer all servicing to qualified service personnel. Servicing is required when the apparatus has been damaged in any way, such as power-supply cord or plug is damaged, liquid has been spilled or objects have fallen into the apparatus, the apparatus has been exposed to rain or moisture, does not operate normally, or has been dropped.
15. This appliance shall not be exposed to dripping or splashing water and that no object filled with liquids such as vases shall be placed on the apparatus.
16. Do not overload wall outlet. Use only power source as indicated.
17. Use replacement part as specified by the manufacturer.
18. Upon completion of any service or repairs to this product, ask the service technician to perform safety checks.
19. Power Sources - This product should be operated only from the type of power source indicated on the marking label. If you are not sure of the type of power supply to your home, consult your product dealer or local power company. For products intended to operate from battery power, or other sources, refer to the operating instruction.
20. Object and Liquid Entry - Never push objects of any kind into this product through openings as they may touch dangerous voltage points or short-out parts that could result in a fire or electric

shock. Never spill liquid of any kind on the product.

21. Damage Requiring Service - Unplug this product from the wall outlet and refer servicing to qualified service personnel under the following conditions:
    a) When the power-supply cord or plug is damaged,
    b) If liquid has been spilled, or objects have fallen into the product,
    c) If the product has been exposed to rain or water,
    d) If the product does not operate normally by following the operating instructions. Adjust only those controls that are covered by the operating instructions as an improper adjustment of other controls may result in damage and will often require extensive work by a qualified technician to restore the product to its normal operation.
    e) If the product has been dropped or damaged in any way, and
    f) When the product exhibits a distinct change in performance - this indicates a need for service.
22. Mains plug is used as disconnect device and it should remain readily operable during intended use. In order to disconnect the apparatus from the mains completely, the mains plug should be disconnected from the mains socket outlet completely.
23. Excessive sound pressure from earphones and headphone can cause hearing loss.
24. Minimum distances of 10 cm around the apparatus for sufficient ventilation
25. The ventilation should not be impeded by covering the ventilation openings with items, such as newspapers, table-cloths, curtains, etc.
26. No naked flame sources, such as lighted candles, should be placed on the apparatus.
27. The use of apparatus in moderate climates.

This symbol indicates that this product incorporates double insulation between hazardous mains voltage and user accessible parts.

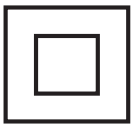

**CAUTION**
TO PREVENT ELECTRIC SHOCK, MATCH WIDE BLADE OF PLUG TO WIDE SLOT. FULLY INSERT THE PLUG TO MAIN POWER SOCKET.

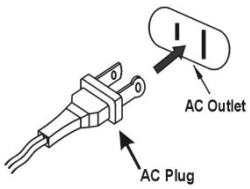


# SAVE THESE INSTRUCTIONS

## CAUTION

**CLASS 1 LASER PRODUCT**

**CLASS 1 LASER PRODUCT**
**APPAREIL LASER DE CLASSE 1**
**PRODUCTO LASER DE CLASE 1**

**CAUTION**
**INVISIBLE LASER RADIATION WHEN OPEN AND INTERLOCKS DEFEATED.**
**AVOID EXPOSURE TO BEAM**

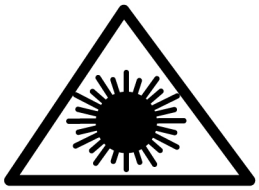

**This product contains a low power laser device.**

Follow the advice below for safe and appropriate operation.

**ON PROTECTION AGAINST LASER ENERGY EXPOSURE**

- As the laser beam used in this compact disc player is harmful to the eyes, do not attempt to disassemble the casing.
- Stop operation immediately if any liquid or solid object should fall into the cabinet.
- Do not touch the lens or poke at it. If you d o, you may damage the lens and the player may not operate properly.

- Do not put anything in the safety slot. If you do, the laser diode will be ON when the CD door is still open.
- This unit employs a laser. The use of controls or adjustment or performance of procedures other than those specified here may result in exposure to hazardous radiation.

**ON PLACEMENT**

- Do not use the unit in places which are extremely hot, cold, dusty or humid.
- Place the unit on a flat and even surface.
- Do not restrict the air-flow of the unit by placing it in a place with poor ventilation, by covering it with a cloth or by placing it on a carpet.

**ON CONDENSATION**

- When left in a heated room where it is warm and damp, water droplets or condensation may form inside the unit.
- When there is condensation inside the unit, the unit may not function normally. Let it stand for 1 to 2 hours before turning the power on, or gradually heat the room up and dry the unit before use.

Should any trouble occur, remove the power source and refer servicing to qualified personnel.

## PRECAUTION FORE USE

- **UNPACK ALL PARTS AND REMOVE PROTECTIVE MATERIAL.**
- **DO NOT CONNECT THE UNIT TO THE MAINS BEFORE CHECKING THE MAINS VOLTAGE AND ALL OTHER CONNECTIONS HAVE BEEN MADE.**
- **DO NOT COVER ANY VENTS AND MAKE SURE THAT THERE IS A SPACE OF SEVERAL CENTIMETERS AROUND THE UNIT FOR VENTILATION.**

### IMPORTANT NOTES

Avoid installing the unit in locations described below:

- Places exposed to direct sunlight or close to heat radiating appliances such as electric heaters.
- Places subject to constant vibration.
- Dusty, humid or moist places.
- Unplug the unit from the electrical power outlet immediately in case of malfunction.

This device complies with Part 15 of the FCC Rules. Operation is subject to the following two conditions:

(1) This device may not cause harmful interference.

(2) This device must accept any interference received, including interference that may cause undesired operation.

**PROTECT YOUR FURNITURE!!**

This model is equipped with non-skid rubber 'feet' to prevent the product from moving when you operate the controls. These 'feet' are made from non-migrating rubber material specially formulated to avoid leaving any marks or stains on your furniture. However certain types of oil based furniture polishes, wood preservatives, or cleaning sprays may cause the rubber 'feet' to soften, and leave marks or a rubber residue on the furniture. To prevent any damage to your furniture we strongly recommend that you purchase small self-adhesive felt pads, available at hardware stores and home improvement centers everywhere, and apply these pads to the bottom of the rubber 'feet' before you place the product on fine wooden furniture.

## BATTERY INSTALLATION

The battery compartment is located on the back of the remote control.

1. Remove the battery compartment door by pressing in on the tab and lifting it off.
2. Insert two (2) AAA size batteries (not included) into the battery compartment following the polarity markings inside the battery compartment.
3. Replace the battery compartment door.

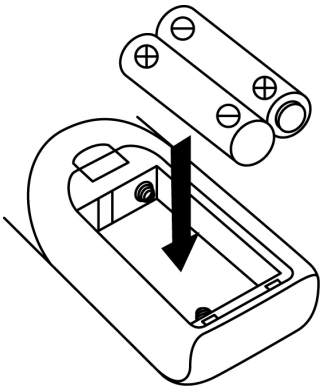

**Battery Precautions**

- Replacement of batteries must be done by an adult.
- Do not mix old and new batteries.
- Do not mix alkaline, standard (carbon-zinc) or rechargeable (nickel-cadmium) batteries.
- The supply terminals are not to be short-circuited.
- Non-rechargeable batteries are not to be recharged.
- Exhausted batteries are to be removed.
- Only batteries of the equivalent type are to be used.
- Batteries are to be inserted with the correct polarity.
- Dispose of batteries properly. Do not dispose of batteries in fire. The batteries may explode or leak.

## LOCATION OF CONTROLS

1) Dust cover
2) LCD display
3) Record button
4) Source button
5) Bluetooth LED indicator
6) Function selector
7) 3.5mm headphone jack
8) USB socket
9) Cassette deck (1) door
10) FM/FM stereo selector
11) CD door open button
12) MP3 folder up button
13) Skip down⏮ button
14) Deck 1 control key
    - ● record key
    - ► playback key
    - ◄◄ rewind key
    - ►► fast forward key
    - ■⏏ stop/eject key
    - ❚❚ pause key
15) CD door
16) Play/pause/stop►❚❚/■ button
17) Bluetooth/Phono button
18) Remote sensor
19) Power on/off / volume up/down knob
20) Tuning knob
21) FM stereo LED indicator
22) Cassette deck (2) door
23) Hi-speed dubbing button
24) Skip up⏭ button
25) LED dial pointer
26) Deck (2) control keys
27) Spindle adaptor
28) Turntable speed selector
29) Pick-up holder
30) Auto Stop on/off switch
31) FM antenna
32) Left / Right speaker
33) Line out RCA socket
34) DC jack
35) AC/DC adaptor
36) DC plug

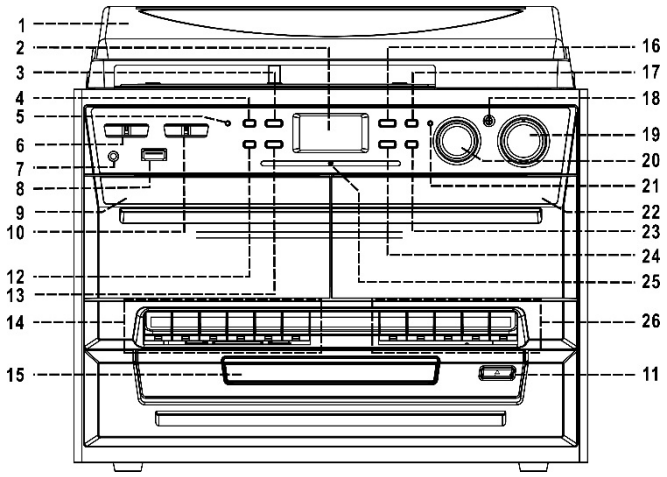


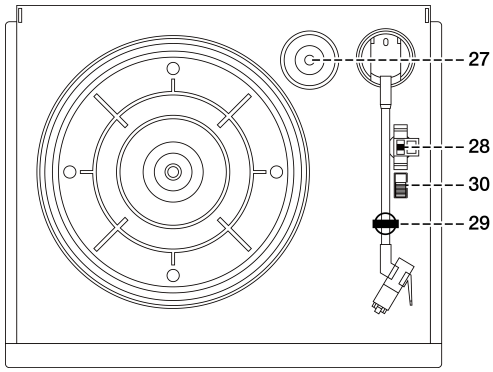


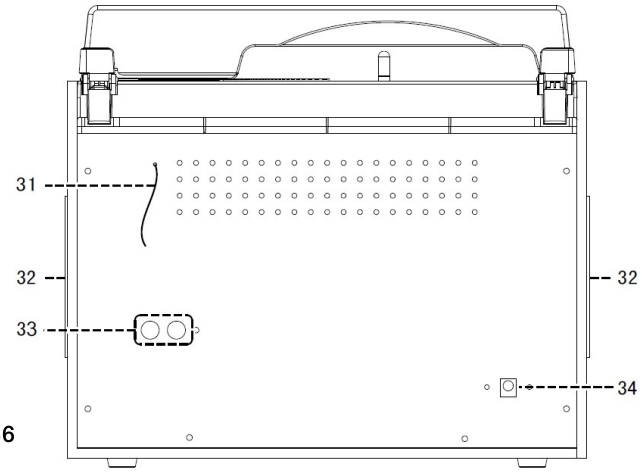


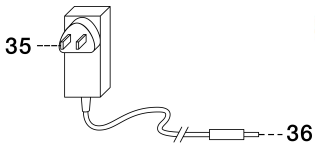


**Caution:**
Usage of controls or adjustments or performance of procedures other than those specified herein may result in hazardous radiation exposure.
This unit should not be adjusted or repaired by anyone except qualified service personnel.

## Precautions for use

### Installation

- Unpack all parts and remove protective material.
- Do not connect the unit to the mains before checking the mains voltage and before all other connections have been made.
- Do not cover any vents and make sure that there is a space of several centimeters around the unit for ventilation.

## Remote control transmitter

**Battery installation** (battery not provided)

The infra-red transmitter requires 2 pcs AAA size battery for operation

**Button description**

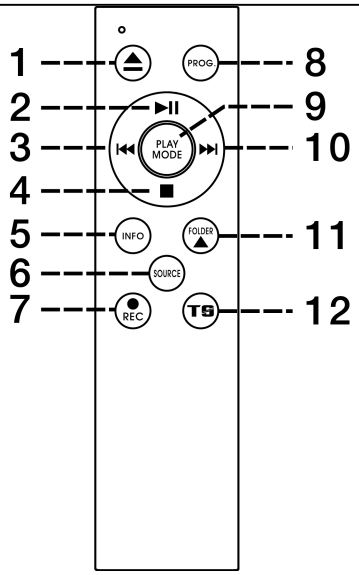


| | | |
|---|---|---|
| (R1) | ⏏ OPEN/ CLOSE | Press to open or close the CD door |
| (R2) | PLAY/PAUSE▶II | In CD/USB mode, press once to start playback. Press again to enter Pause mode. |
| (R3) | SKIP/SEARCH BACKWARD ⏮ | Press once to skip to the previous track. Press and hold to search backward. |
| (R4) | STOP ■ | In CD/USB mode, press to stop playback or cancel the stored program. |
| (R5) | INFO | In Phono mode, press to select the Encoding bit rate. Use this button to erase tracks on an MP3 player/USB flash drive. |
| (R6) | SOURCE | Under CD/USB function band, press repeatedly to select different function modes. |
| (R7) | REC | Press to activate the encoding or recording function. Also press to confirm when deleting MP3 files. |
| (R8) | PROGRAM | In CD/USB mode, press to activate the programming function. |
| (R9) | PLAY MODE | In CD/USB mode, press to activate the Repeat / Intro or Random function. |
| (R10) | SKIP/SEARCH FORWARD ⏭ | Press once to skip to the next track. Press and hold to search forward. |
| (R11) | FOLDER UP▲ | In USB Mode, press to select Folder up. |
| (R12) | TRACK SEPARATION | Press this each time you wish to separate an individual music track from turntable or cassette tape during encoding and recording. |

## Top cover assembly

1. Push the metal bracket to rear side.
2. Connect the metal bracket to the top cover
3. Connect the hinge of the top cover to the main unit

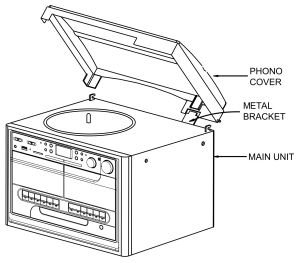

## Connection

1. Insert the DC plug (36) to the DC jack (34) of the unit, then connect the AC/DC adaptor (35) to AC outlet.
2. Turn the power on/off button (19) clockwise until hear a “ click “ sound.
3. Switch the function selector (6) to “ Tuner “ function. If the LCD display (2) light up with blue backlight, it’s mean the power supply is normal. Now your system is ready to play the music.

# Operation

## Listening to radio

### Manual tuning

1. Turn Function selector (6) to select “ Tuner ” mode and then select desire band (FM or FM-stereo) at “ FM/FM-ST “ selector (10).
2. Turn the TUNING Knob (20) to tune into the desired station, as indicated by the LED Dial Pointer (25).
3. Turn the VOLUME Knob (19) for the desired volume level.

### FM & FM-stereo reception

- Set the “ FM/FM-ST “ selector (10) at “ FM ” position. Programs are received in mono mode. In particular when stereo signals are weak. It is preferable to receive the program in mono.
- Set the “ FM/FM-ST “ selector (10) at “FM-ST” position for receiving stereo programs. The “FM-ST” LED indicator will light up to show FM stereo program is receiving.

### Hints for best reception:-

- FM : The receiver has a build-in FM wire antenna (31) hanging at the rear cabinet. This wire should be totally unraveled and extended for best reception.

## Playing compact disc

- **Getting start**

1. Slide the Function selector (6) to select “ CD/USB ” mode.
2. Press “Open/close” button (11) to open the CD door (15).
3. Place a CD with the printed side facing up inside the tray & then close the CD door.
4. Focus search is performing, the LCD display (2) will show the total number of tracks & total playing time.

- **Play / pause / stop mode ▶II / ■**

1. Press the “ Play/pause/stop ” button (16) to start playback, the first track will start playback.
2. To interrupt, press the “ Play/pause/stop ” button (16) once, the playing time will be freeze & flashing on the LCD display (2). Press again to resume normal playback.
3. If press and hold the “ Play / pause stop “ button (16) for over 2 seconds during playback mode. The system will go to stop mode.

- **Skip/search mode (skip/search up ▶▶I / skip/search down I◀◀)**

1. During play or pause mode, if “skip up” button (24/R10) is pressed. It will go to next track and display the track no. And then remain the play or pause mode.
2. During play or pause mode, if “skip down” button (13/R3) is pressed. It will go back to the beginning of the track, original track no. Is display and remain the play or pause mode.
3. After step 2, press “skip down” button (13/R3) again will go to the previous track and remain the play or pause mode.
4. If press and hold the “ skip up/down button “ (24, 13 – R10, R3) during CD/MP3 playback, the playing track will go fast forward or backward until the button being released.

- **For MP3 disc**

1. Press “ Folder up “ button (12 – R11), the folder nr. will goes up
2. Press “ Skip up “ or Skip down (24,13 – R10, R3) button, the track no. Change.
3. When the desired track is being selected, press the CD “ Play/pause/stop ” button (16) to start playback.

### ID3 (track/album title) function (by remote handset)

1. Press the “ Info “ (R5) button during playback of MP3 disc, the song title is being displayed.
2. Press the “ Info ” button again to disable the function.

### MP3 track format requirement:-

- MP3 bit rate : 32 kbps~256 kbps.
- The performance of playing MP3 disc is various from the quality of recording disc and the method of recording. Furthermore, the searching lead-time for MP3-CD is longer than normal CD due to difference in format.

- **Repeat/intro/random mode**

Press the PLAY MODE button (R9) before or during playback, a single track, single folder (MP3 only) or all the tracks can be played in difference mode as follow:-

**For CD**

(1) repeat 1 → (2) repeat all tracks → (3) intro → (4) random → (5) off mode

| Play mode | Indicator on LCD display |
|---|---|
| Repeat one track | ↻ |
| Repeat all | ↻ ALL |
| Intro | INTRO |
| Random | RANDOM |
| Off mode | ---------- |

**For MP3 disc**

(1) repeat 1 → (2) repeat all tracks → (3) repeat 1 folder → (4) intro play → (5) random → (6) off mode → (1) repeat 1

| Play mode | Indicator on LCD display |
|---|---|
| Repeat single track | ↻ |
| Repeat all tracks | ↻ ALL |
| Repeat single folder | ↻ FOLDER |
| Intro play mode | INTRO |
| Random mode | RANDOM |
| Off mode | ---------- |

- **Repeat play**

This function allows repeated listening to the desired tracks or folder.

- **Intro play (by remote control)**

This function allows you to listen to the first ten seconds of each CD track to save time when searching for a particular song.

- **Random play**

This function allows listening to all CD tracks or folders in random order.

**CD disc programming (by remote control)**

Up to 40 tracks can be programmed for CD or MP3 file and play in any order.
Before use, be sure the system is at stop mode ■ before programming:-

1. Set in CD/USB mode (6) & stop the CD playback. (16/R4)
2. Press the Program" button, (R8) " PROG " will appear on LCD display (2). Moreover, it will indicate program no. and digits for track no. To be programmed.
3. Select a desired track by pressing skip ⏮ or ⏭ buttons (R3, R10).
4. Press the " Program " button to store the trace into memory.
5. Repeat steps 3 and 4 to enter additional tracks into the memory if necessary.
6. When all the desired tracks have been programmed, press CD " Play/pause/stop " ▶II/■ button (16) to play the disc in assigned order.
7. To cancel the programmed file, press "stop" button on remote handset until " PROG " is disappear on LCD display (2)

## Playback of MP3 song via USB storage media

**Connecting**

The system is able to decode and playback all MP3 file which stored in the memory media with USB connecting port.

Set Function selector (6) at USB position and then press source button (4) to select " USB" mode.

1. Plug-in the USB plug with the face up & make sure it going into completely. Insert straight without bending.

- **Connecting the USB upside down or backwards could damage the audio system or the storage media (USB thumb drive). Check to be sure the direction is correct before connection.**

2. The system will start reading the storage media automatically after connecting, and LCD display (2) will show the total number of MP3 files and total number of folder being detected.
3. Repeat the same playback procedure as playing CD/MP3 disc as above

### Remark

- The system can detect and read the file under MP3 format only though the USB port.
- **If connect the system to MP3 player via the USB socket, due to variances in MP3 encoding format, some MP3 player may not be able to play via the USB socket. This is not a malfunction of the system.**
- **USB port does not support connection with USB extension cable and is not designed for communication with computer directly.**

## Phono

### Note:

- Remove the stylus protector.
- Be sure that the tone arm is being detached from the tone arm rest before operating and re-secured again afterwards.
-

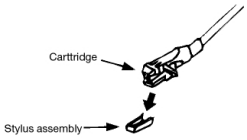


**IMPORTANT NOTE:** Make sure the **BT/PHONO button** (17) is in the highest position for the **PHONO Function** to work. If the Bluetooth LED Indicator light (5) is on and you find this button is pressed in , the unit is **in Bluetooth mode and it will not be possible to play a record as the turntable will not rotate** – press the button again so it is in the high position . (See page E-9 for Bluetooth operation)

1. Set the speed selector (28) to the proper position depending on the record to be played.
2. Place the record on the platter (use the spindle adaptor (27) if required).
3. Lift the tone arm from the rest and slowly move it to the record side. The platter will start to rotate.
4. Place the tone arm to the desired position of the record.
5. Adjust the volume to the desired level.
6. At the end of record, the platter will automatically stop rotating. Lift the tone arm from the record and return it to the rest.
7. To stop manually, lift the tone arm from the record and return it to the rest.

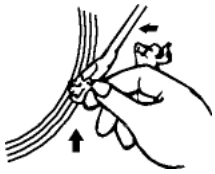

### AUTO-STOP FUNCTION

Some vinyl records will stop playing before the last track has finished, because the auto-stop area is set outside the area pre-set for the unit. If that is the case, move the AUTO-STOP Switch (30) to the "OFF" position**, the tone arm will then carry on to the end of the record. However, the turntable will continue rotating and will not stop automatically. To stop the turntable rotating, turn the unit off or switch the AUTO-STOP switch (30) back to the "ON" position, then return the tone arm to its rest. **Note**:** with the Auto-Stop switch set at the "OFF" position, the turntable will start rotating as soon as Phono function (6) is selected and will keep turning at the end of the record.

**Remark** : As some kind of record the auto-stop area was out of the unit setting, so it will stop before the last rack finish. In this case, select the auto-stop switch to " off " position, then it will run to the end of the record but will not stop automatically (turn off the power button or switch back the auto-stop switch (30) to " on " position to stop the platter rotate). Then put back the tone arm to the rest position.

## Listing to tape

### General operation

| | |
|---|---|
| Stop / eject key | Press to stop all deck operation. Press again to open the cassette door. |
| Fast forward key & Fast rewind key | Press to start rapid tape winding in either forward or reverse direction. Press stop / fast rewind key eject keys when the cassette spools stop turning. |
| Play key | Press to start playing tape. |
| Pause key | Press to stop tape operation temporarily. Press again to resume play. |
| Record key (deck 1 only) | Press together with play key to start tape recording. |

## Playback

- Select “Tape” function (6).
- Put in the cassette tape.
- Press Play key to active playback
- Adjust the volume control (19) to the desire level.
- Use pause key when you want to stop playback temporarily.
- Press Stop / eject key when finished.

**Remark:**
It is possible to play both cassette players one after the other. If you press the button “Pause” and “Play” at deck 1 and button “Play” at deck 2, than the tape of deck 1 will be start to play automatically after the tape of deck 2 is finished.

## Recording

**A. Recording from tape (deck 2 to deck 1)**
This unit enables you to duplicate a pre-recorded tape to another tape. It is performed only one way from deck 2 (playback) to deck 1 (recording).

### Dubbing at normal speed

- Select “ TAPE ” function (6) and set the dubbing button (23) at the “ nor. ▁▇▁ “ position.
- Insert a pre-recorded cassette tape into Deck 2 and a blank cassette tape into Deck 1.
- Press the “ PAUSE ” key and then press the “ RECORD ” and “ PLAY ” key together at Deck 1.
- Press the “ PLAY ” key to start playback at Deck 2 and then press the “ PAUSE ” key at Deck 1 to start dubbing.
- Press the “ PAUSE ” key at Deck 1 and then the “ STOP ” key at Deck 2 when finished recording.

**Dubbing at high speed**
This unit has high speed dubbing, which can save dubbing time by two-thirds when compared to normal speed:

- Press the “ HI-SPEED DUBBING “ button (23) to the “hi ▁▇▁ ” position and then follow the same procedures as described in the “dubbing at normal speed” section.
- To avoid having to listen to the noise produced by hi-speed dubbing, set the volume control to a minimum level.
- **Do not** activate/de-activate the “hi-nor. Dubbing” button during dubbing, this will vary the speed of recording and may damage the cassette tape.

**B. Recording from radio to cassette**

- Select “ Tuner ” function (6).
- Tune to the desire station and insert a blank cassette tape in deck 1.
- Press “Record” & “Play“ key to start recording.
- Press “Pause” keys and then “Stop/eject” key when finish.

**NOTE:** During recording of some FM radio stations, some interference in reception may be experienced. This is normal and not a malfunction of the system.

**C. Recording from phono to cassette**

- Select “Phono” function (6).
- Insert a blank cassette tape in deck 1 which suitable for recording.
- Press “Pause” key first and then “Record” & “Play“ key at cassette. Recording function is now stand by.
- Start the playback at phono and then press “Pause key” at cassette to start recording.
- To stop recording, press “ Pause ” key and then “Stop/eject” key on cassette tape deck first, then return the tone arm back to the rest station at phono.

**D. Recording from CD/USB to cassette**

- Select “ CD/USB ” function (6).
- Insert a blank cassette tape in Deck 1.
- Press the “ PAUSE ” key first and then the “ RECORD ” & “ PLAY ” keys together at cassette Deck 1 controls. The recording function is now in standby.
- Start playback of either CD/USB mode, and then press the “ PAUSE KEY ” at Deck 1 to start recording.
- To stop recording, press and hold the “ STOP ” button (16) in CD/USB mode first, then press the “ PAUSE ” key at Deck 1 and then the cassette “ STOP/EJECT ” key.

.

## Encoding of CD, Phono or cassette tape into MP3 file

The system is able to encode CD, record (from phono) and cassette deck file (from tape) to MP3 format and recording at memory media with USB connecting port. Before encoding, make sure one of these is connected to the relevant port/slot and has enough free memory space

### A) CD encoding

**I) recording 1 track**

1. Play the CD track you want to encode/record, as normal.
2. Press the " Record " button (3) during playback of the desired track
3. " USB " & " REC " will be flashing on the LCD display to show encoding is in progress.
4. After the encoding process has finished, the unit will stop playback automatically.

**II) Recording the complete CD**

1. Place a CD with the printed side facing up inside the CD tray & then close the cd door.
2. After disc search has been completed, press the " Record " button (3/R7)
   **Note:**
   Do not press "Play" and then "Record", or only the selected track will be recorded.
3. " USB " & " REC " will be flashing on the LCD display to show encoding is in progress.
4. After the encoding process has finished, the unit will stop playback automatically

**Remark:-**

- The recording speed is 1:1 and according to the actual plying time of the CD/ phono or tape
- During copy mode, the system will copy the MP file only.
- The system will create a " audio " folder for encoding file and " fcopy " for copying file.
- The recording format is preset at – MP3 bit rate : 128 kbps, sampling rate : 44.1khz
- No song title will be recorded during encoding mode
- To interrupt the recording, press the " Record " button again during record mode.
- **Copy MP3 file from USB will be successful only entire song being copied, if terminate the copying process intermediately, there is no track being recorded nor stored to the USB**

**III) Copying of MP3 file (by remote control handset)**

If putting a MP3 disc instead of a CD-disc, the system will copy the files to the USB if press the " Record " button (3). The operation procedures is same as CD encoding as stipulate on above, and the system will switch to copying mode only if MP3 file being read.

### B) Phono encoding

1) Plug in the USB pen drive for recording (make sure it had enough empty space).
2) Set the function button (6) to " Phono " position and then press the " record " button (3) directly.
3) The LCD display (2) with show the word " **USB** " and flashing, after then display " USB " & " REC " and flashing. Now the system is starting the encoding mode.
4) Start playback at phono for the track which you want to record to USB.
5) After finish of recoding, press and hold the " Record " button (3) until the LCD stop flashing and return to " phono " mode.

### C) Cassette encoding

1) Plug in the USB pen drive for recording (make sure it had enough empty space).
2) Set the function button (6) to " Tape " mode and then press the " record " button (3) directly.
3) The LCD display (2) with show the word " **USB** " and flashing, after then display " USB " & " REC " and flashing. Now the system is starting the encoding mode.
4) Start playback of cassette tape(at either deck 1 or 2) which the track you prepare to encoding to MP3 format.
5) After finish of recoding, press and hold the " Record " button (3) until the symbol " USB " & " REC " disappear and resume to " Tape " mode on LCD display (2).

### D) Bluetooth encoding

1) Plug in the USB pen drive for recording (make sure it had enough empty space).
2) Connect the Bluetooth device with the unit following the instruction under "Bluetooth Connection and Playback" on E-8.
3) Press the " record " button (3) directly. The LCD display (2) with show the word " **USB** " and flashing, after then display " USB " & " REC " and flashing. Now the system is starting the encoding mode.
4) Start playback of the track on the Bluetooth device that you prepare to encoding to MP3 format.
5) After finish of recoding, press and hold the " Record " button (3) until the symbol " USB " & " REC " disappear and resume to " BT " mode.

### D) Encoding bitrate (by remote handset)

You can select the desired bitrate during encoding, the higher bit rate will generate better sound quality and occupy more space of memory. The selectable range is from 32 / 64 /96 /128 / 192 / 256 kbps respectively

6) Set in " Phono " function (6) & remain stop mode (16/R4).
7) Press the " Info " function and the LCD display (2) will show the default bitrate (128 kbps)
8) Press skip ▶▶I or I◀◀ buttons (13,24 / R3, R10) to select the desire bitrate for encoding.
9) Press again the " Info " to confirm the setting and the LCD display (2) will resume to " Phono " mode

### E) Track separation (by remote handset)

When recording vinyl long playing records or cassette tapes, the music tracks would normally be recorded as one long track. If you wish to separate the tracks while encoding/recording music from Phono or Tape to USB, the procedure is as follows:

1. Play and record the first track (on either record or tape), as described previously.

2. When the first track has finished playing/encoding, press the " TS " (track separation) button (R12) on the remote control handset once before the next track on Phono/Cassette starts playing and recording, the system will generate a new track and continue recording this. When the word " PHONO " or " tape " flashes up on the LCD display, this indicates the unit is successfully creating a new track.
3. Repeat this process until each track has been recorded.
4. When you have completed recording the last track, press and hold the " RECORD " button (R3) until the LCD display stops flashing and returns to " PHONO " mode.

**Note:** As vinyl records and cassette tapes have no digital information, no MP3 song information will be stored on the device. However, if required, individual tracks can be transferred to, viewed and named on a computer.

## File delete at USB (by remote control)

The system is able to erase the file stored inside the USB pen drive by following:-

### A) Single file delete (by remote control)

1 . Select at " USB " mode.
2 . Press and hold the " Info " button for 3 seconds and the LCD display (2) will show (del ---001)
3 . Press Skip forward▶▶I or Skip backwardI◀◀ button to select the file going to delete
4 . Press the " REC" button to enter " yes / no " mode and then press skip forward▶▶I or skip backwardI◀◀ to select " yes " or " no ".
5 . Press the " REC " button again to confirm the setting.

### B) All files delete (by remote control)

1. Select at " USB " mode.
2. Press and hold the " Info " button for 3 seconds and the LCD display (2) will show (del ---001)
3. Press and hold the " Info " button again and the LCD will show " format / y/n " and flashing. Then press Skip forward▶▶I or Skip backwardI◀◀ to select " y (yes) " or " n (no) ".
4. Press the " REC " button again to confirm the setting.

**Remark** :

- All the files inside the USB storage media will be deleted completely after confirming to " y (yes) " mode.
- Press " Stop " button once at remote handset to quite delete mode

### Removing of USB

To remove the USB, turn off the power or switch the function mode to either CD, tape or tuner first. Then, un-plug it by pulling out the USB socket directly.

## Bluetooth connecting and Playback

1. Select the Main Function selector (6) to " PHONO/BT " mode. Then press the Bluetooth/Phono button (17) to "BT" position.
3. The Bluetooth LED indicator (5) will flash, it means the Bluetooth in non connection / searching mode.
4. Switch on the Bluetooth feature of your Bluetooth device (such as mobile phone) and select **"BTSMC386"** Bluetooth equipment to connecting.
5. Once the connecting has been completed and connected successfully, the Bluetooth LED (5) will light up in blue color.
6. Start to playback your Bluetooth device and enjoy the music by the main unit.

## Line out connection

You can connect the system to your whole hi-fi system by connecting the line out socket (33) to the auxiliary input socket with a RCA cable (not included).

## SPECIFICATIONS

DC Input 12V ⎓ 1.2A

# CARE AND MAINTENANCE

1. Avoid operating your unit under direct sunlight or in hot, humid or dusty places.
2. Keep your unit away from heating appliances and sources of electrical noise such as fluorescent lamps or motors.
3. Unplug the unit from the electrical power outlet immediately in case of malfunction.

## CLEANING THE UNIT

- To prevent fire or shock hazard, disconnect your unit from the AC power source when cleaning.
- The finish on the unit may be cleaned with a dust cloth and cared for as other furniture, Use caution when cleaning and wiping the plastic parts.
- If the cabinet becomes dusty wipe it with a soft dry dust cloth. Do not use any wax or polish sprays on the cabinet.
- If the front panel becomes dirty or smudged with fingerprints it may be cleaned with a soft cloth slightly dampened with a mild soap and water solution. Never use abrasive cloths or polishes as these will damage the finish of your unit.

**CAUTION:** Never allow any water or other liquids to get inside the unit while cleaning.

### Disclaimer

Updates to Firmware and/or hardware components are made regularly. Therefore some of the instruction, specifications and pictures in this documentation may differ slightly from your particular situation. All items described in this guide for illustration purposes only and may not apply to particular situation. No legal right or entitlements may be obtained from the description made in this manual.

**Warning Statement**

This device complies with part 15 of the FCC Rules. Operation is subject to the following two conditions: (1) This device may not cause harmful interference, and (2) this device must accept any interference received, including interference that may cause undesired operation.

Any Changes or modifications not expressly approved by the party responsible for compliance could void the user's authority to operate the equipment.

Note: This equipment has been tested and found to comply with the limits for a Class B digital device, pursuant to part 15 of the FCC Rules. These limits are designed to provide reasonable protection against harmful interference in a residential installation. This equipment generates uses and can radiate radio frequency energy and, if not installed and used in accordance with the instructions, may cause harmful interference to radio communications. However, there is no guarantee that interference will not occur in a particular installation. If this equipment does cause harmful interference to radio or television reception, which can be determined by turning the equipment off and on, the user is encouraged to try to correct the interference by one or more of the following measures:

-Reorient or relocate the receiving antenna.
-Increase the separation between the equipment and receiver.
-Connect the equipment into an outlet on a circuit different from that to which the receiver is connected.
-Consult the dealer or an experienced radio/TV technician for help.

This equipment complies with FCC radiation exposure limits set forth for an uncontrolled environment. This equipment should be installed and operated with minimum distance 20cm between the radiator & your body.