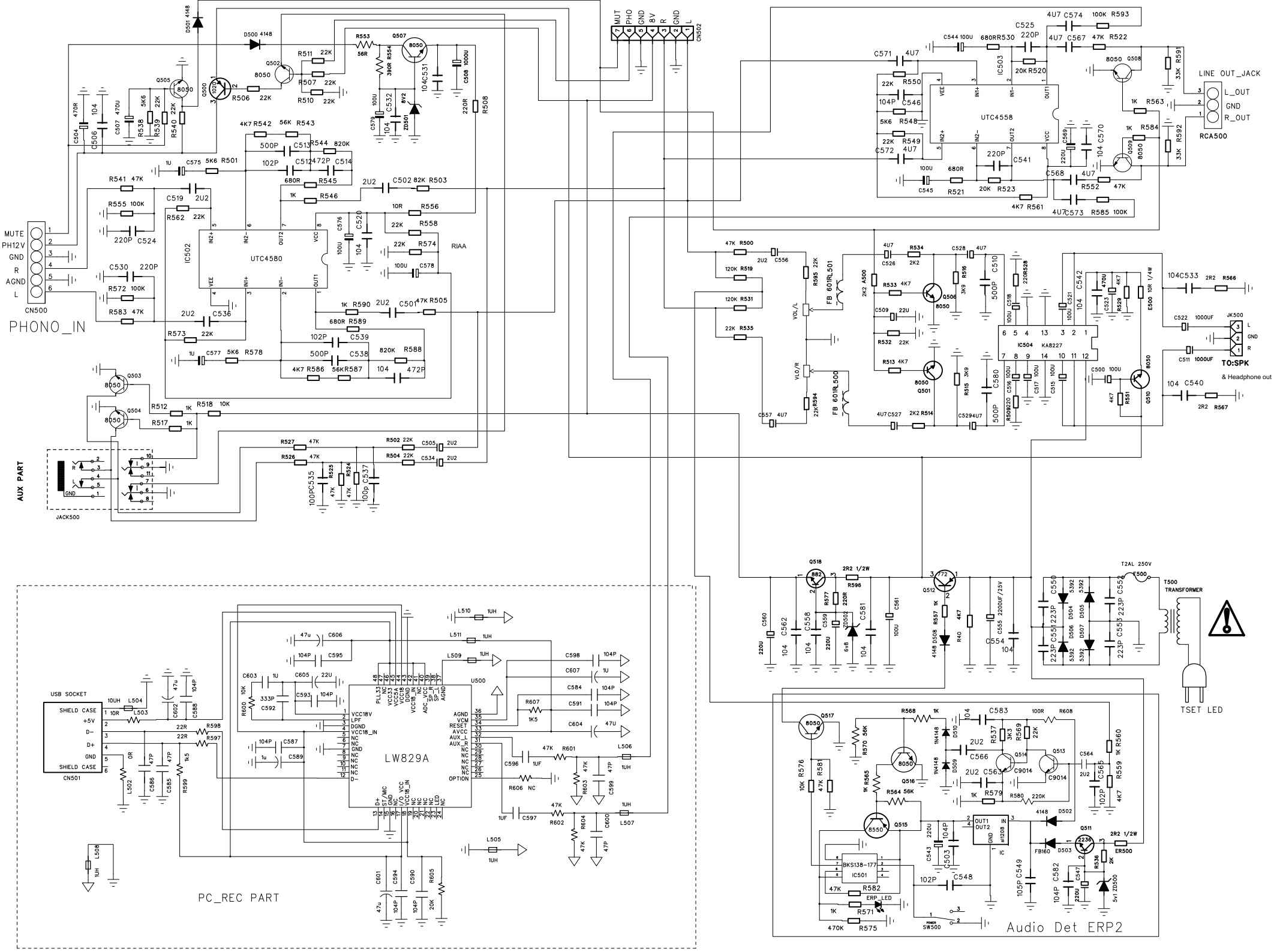
PHONO_IN
CN500
MUTE
PH12V
GND
R
AGND
L
IC502
UTC4580
RIAA
AUX PART
JACK500
CN502
MUT
PHO
GND
8V
R
GND
L
IC503
UTC4558
LINE OUT_JACK
L_OUT
GND
R_OUT
RCA500
IC504
KA8227
JK500
TO:SPK
& Headphone out
FB 601RL501
FB 601RL500
VOL/L
VOL/R
T500
TRANSFORMER
T2AL 250V
TSET LED
USB SOCKET
SHIELD CASE
+5V
D-
D+
GND
SHIELD CASE
CN501
LW829A
U500
PC_REC PART
IC501
BKS138-177
ERP_LED
SW500
Audio Det ERP2

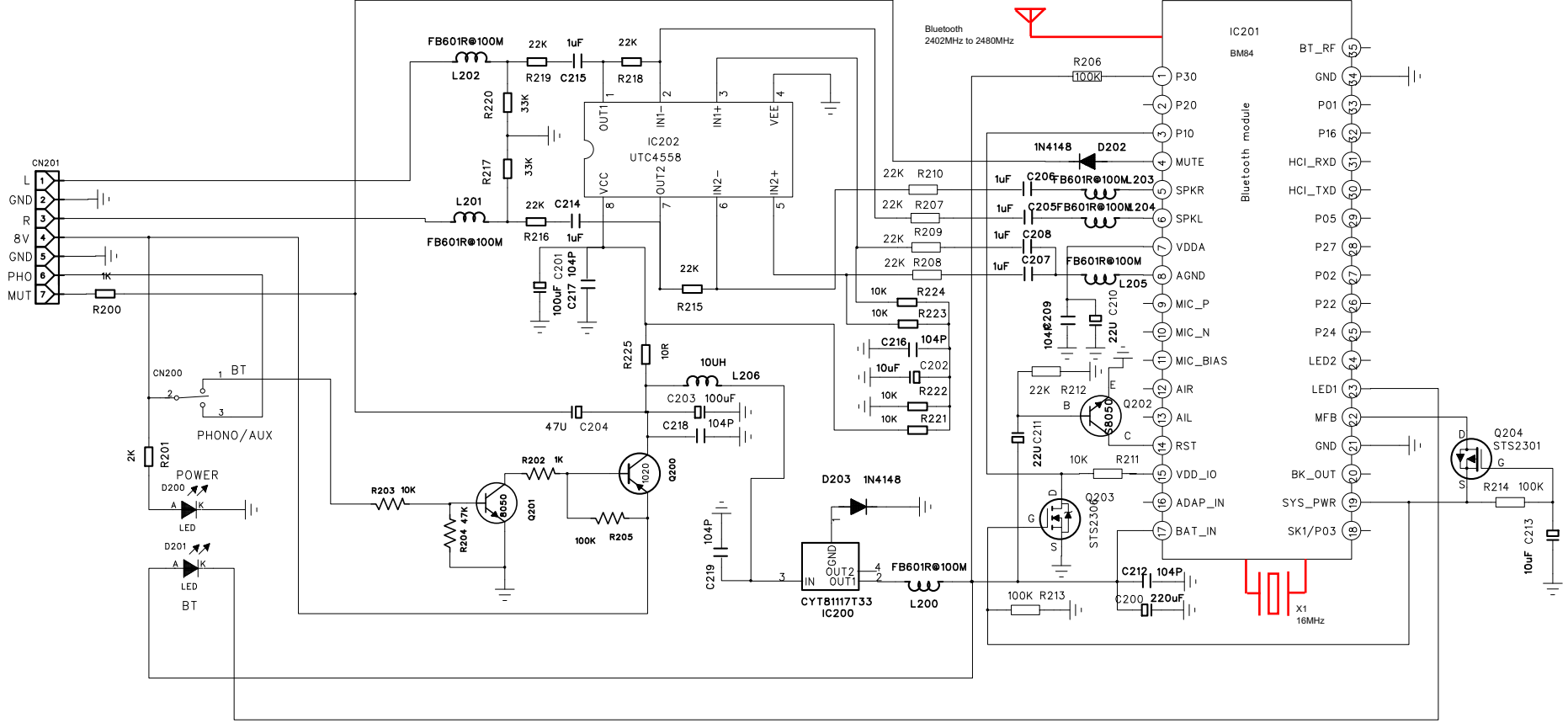
Bluetooth
2402MHz to 2480MHz
IC201
BM84
Bluetooth module
IC202
UTC4558
CN201
CN200
PHONO/AUX
POWER
LED
BT
CYT81117T33
IC200
X1
16MHz
Q204
STS2301
Q203
STS3306
Q202
8050
Q201
8050
Q200
1020
FB601R@100M
L202
L201
L203
L204
L205
L206
L200
D202
1N4148
D203
1N4148
D200
D201
R200
R201
R202
R203
R204
R205
R206
R207
R208
R209
R210
R211
R212
R213
R214
R215
R216
R217
R218
R219
R220
R221
R222
R223
R224
R225
C200
C201
C202
C203
C204
C205
C206
C207
C208
C209
C210
C211
C212
C213
C214
C215
C216
C217
C218
C219
R1 1K8
R2 100R
VR200
TONE200
S200
SW200-F
MOTRO
D204 4001
D2 4001
D3 4148
TO:PHONO
CARTRIDGE
PHONO PART

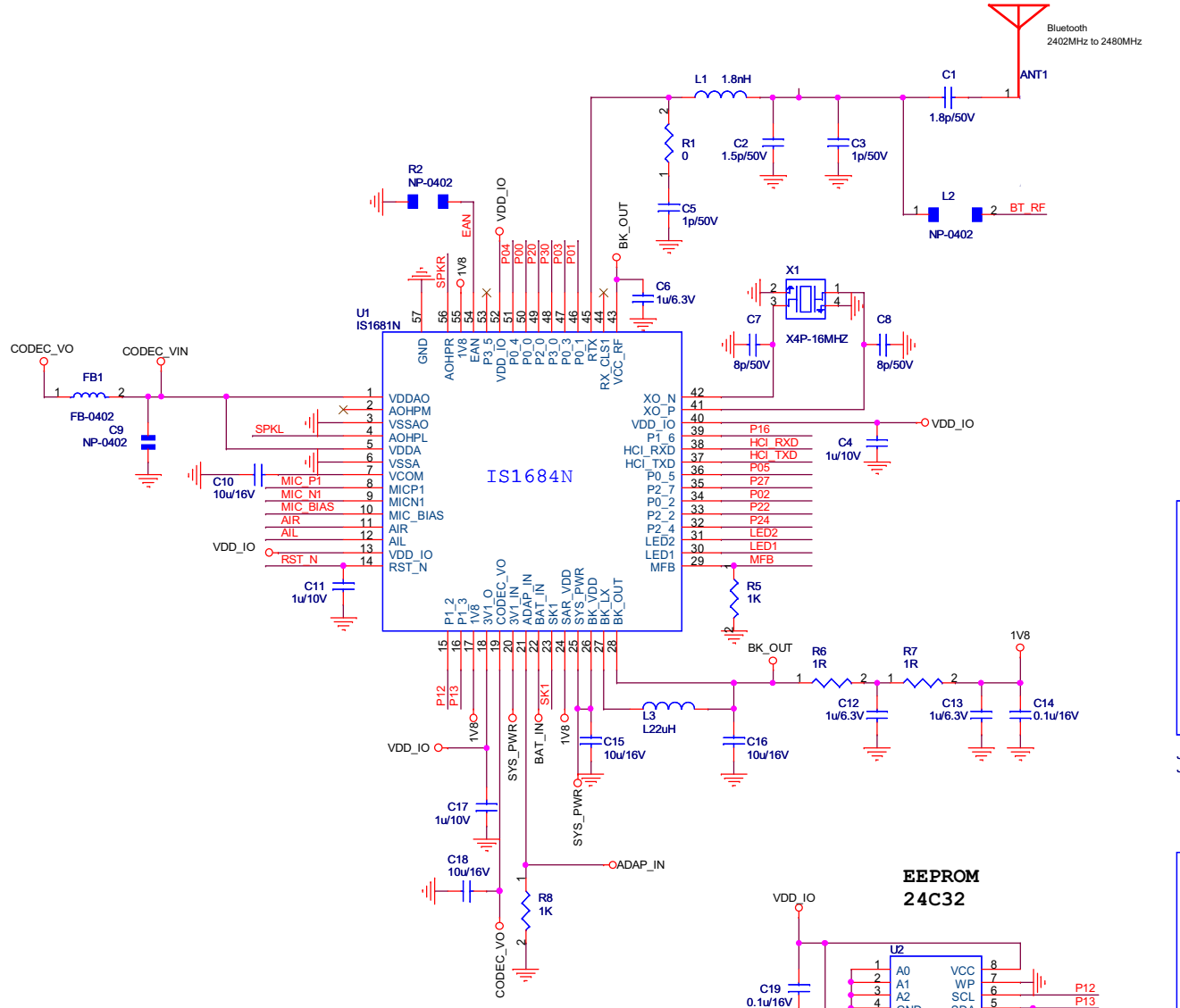

PIN DEFINATION

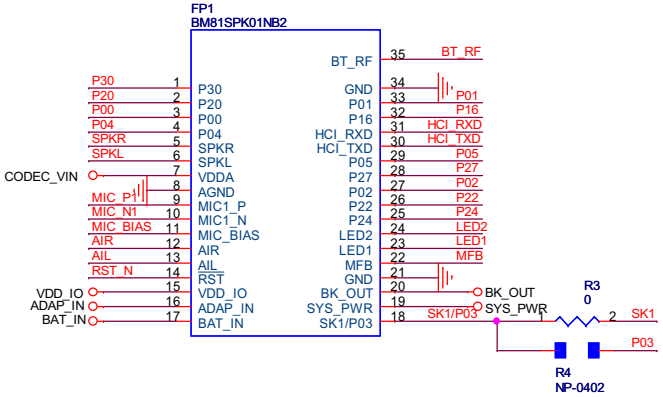

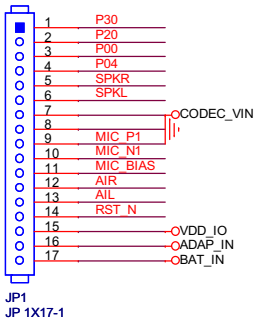

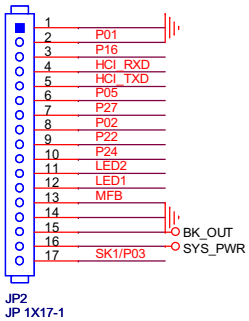

GPIO Description

P00	Slide Switch Detect/TX_IND
P01	Volume up
P02	Play/Pause
P03	RX_IND
P04	Audio AMP Enable
P05	REV
P16	Volume down
P20	System Configuration
P22	Keep alive for external LDO
P24	System Configuration
P27	FWD
P30	Line-in detect

EEPROM 24C32

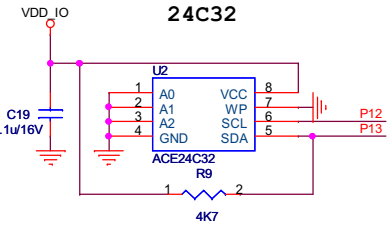

BOM NAME	R3	R4	NOTE
BOM_BM81SPK01NB2_V1_20110809	0 OHM	NP	Pin 18 = SK1
BOM_BM81SPK01NB3_V1_20110809	NP	0 OHM	Pin 18 = P03

ISSC Technologies Corp.
ADD. 4F, No.8, Dusing Rd., Hsinchu Science Park, Hsinchu City 30078, Taiwan
TEL. 886-3-5778385

Board Name	BM81SPK01NB2 / BM81SPK01NB3	P/N
Size B	Title SCH_BM81SPK01NB2_V1_20110809 SCH_BM81SPK01NB3_V1_20110809	Rev V1
Date: Monday, November 07, 2011	Sheet 1 of 1	