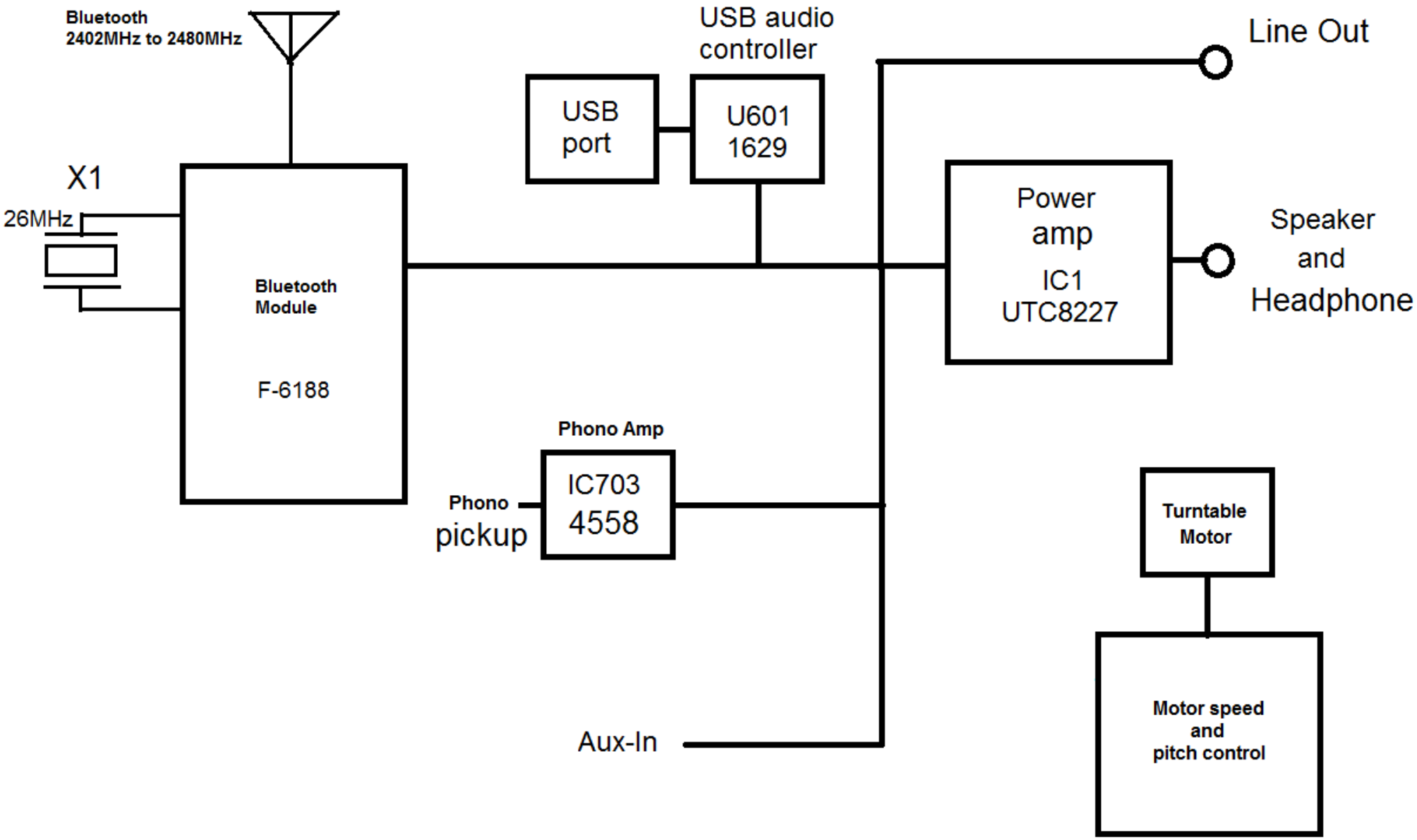
Bluetooth
2402MHz to 2480MHz
X1
26MHz
Bluetooth
Module
F-6188
USB audio
controller
USB
port
U601
1629
Line Out
Power
amp
IC1
UTC8227
Speaker
and
Headphone
Phono Amp
Phono
pickup
IC703
4558
Aux-In
Turntable
Motor
Motor speed
and
pitch control

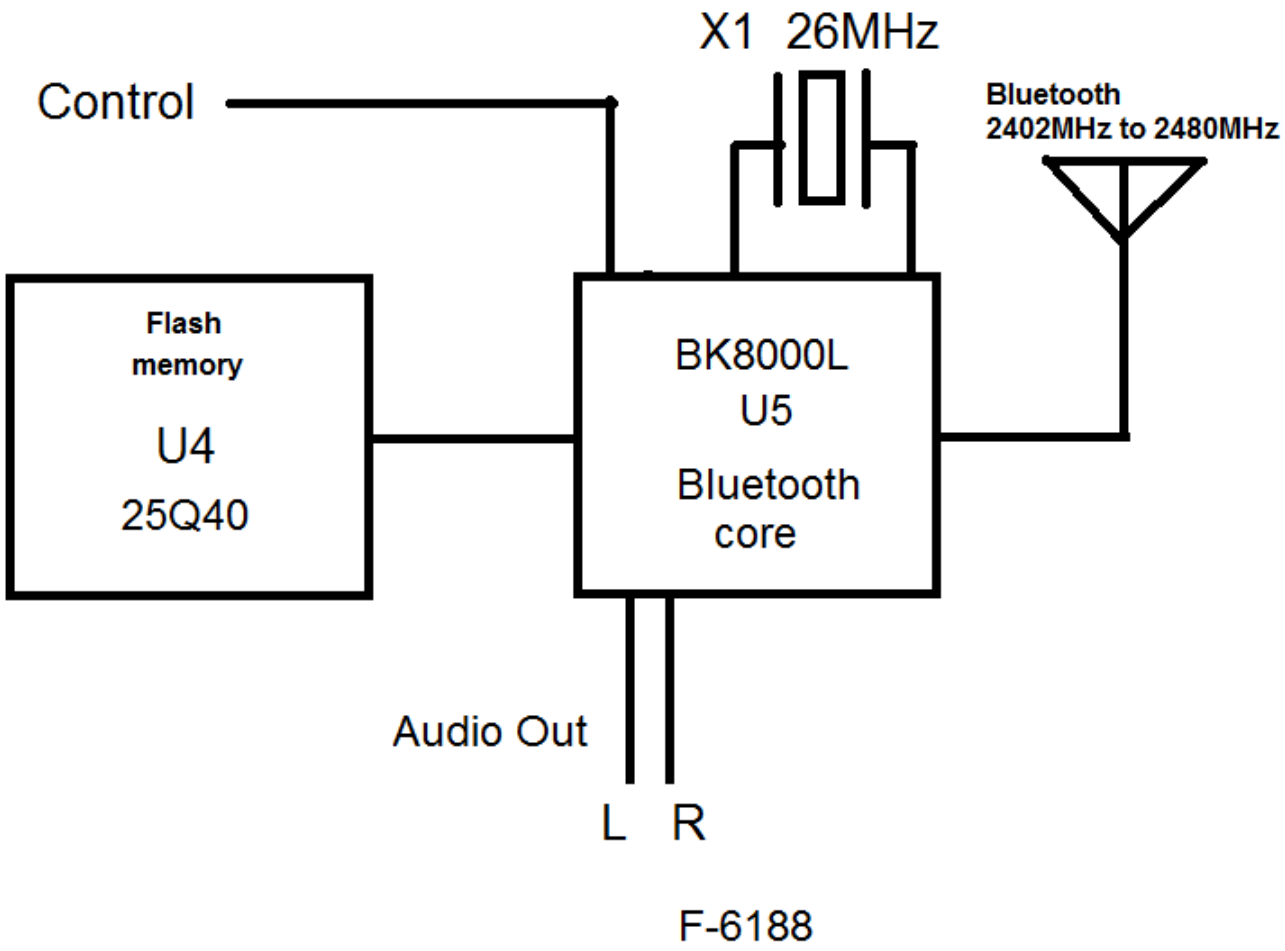


F-6188

**Bluetooth Module**
**Block Diagram**

# 1. General Description

The BK8000L chip is a highly integrated single-chip Bluetooth audio device. It integrates the high-performance transceiver, rich features baseband processor, and Bluetooth audio profile. The BK8000L cache based architecture enables it is fully programmable with any application, that it may be used for control and multimedia hybrid application. The internal dual stereo ADC converts the stereo line in input to digital audio that enables the line in use the digital equalizer. Hardware equalizer and accelerator offload the MCU, and make it suitable for low power headset application.

## 1.1. Features

- Operation voltage from 2.8 V to 4.2 V
- Bluetooth 2.1+EDR compliant
- -92 dBm sensitivity for 2 Mbps mode and 5 dBm transmit power
- A2DP v1.2, AVRCP v1.0 and HFP v1.5 profile
- Integrated 96 dB SNR stereo ADC and stereo DAC
- Five bands hardware equalizer
- Digital equalizer for stereo line in
- Hardware accelerator for low power
- Full duplex hands-free speakerphone
- Up to 250 mA charge controller

## 1.2. Applications
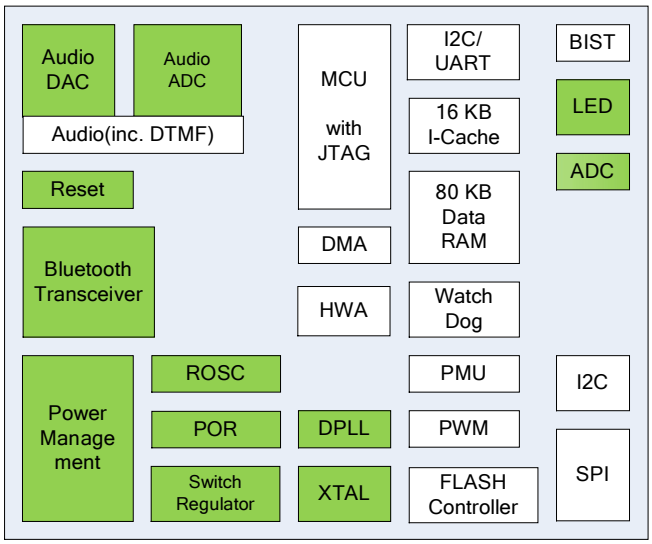
- Bluetooth stereo speaker
- Bluetooth stereo headset
- Bluetooth control and multimedia hybrid