Technical Description

The Equipment Under Test (EUT) is a Stereo Turntable with Bluetooth Receiver and Record Storage Compartment. It can accept input sources such as analog Aux-in (3.5mm phone jack), Phono (Long-Play Record), USB flash memory playback and wireless Bluetooth device. The Bluetooth module in the EUT is operating in the frequency range from 2402MHz to 2480MHz (79 channels with 1MHz channel spacing). The audio signal is amplified and fed to the built-in stereo loudspeakers. The EUT has an analog line-out. It is powered by 120VAC only.

2.4GHz Bluetooth Module:
Modulation Type: GFSK
Antenna Type: Integral, Internal (PCB Trace)
Frequency Range: 2402MHz - 2480MHz, 1MHz channel spacing, 79 channels

Nominal field strength is 90BµV/m @ 3m
Production Tolerance of field strength is +/- 3dB
Antenna gain is 0dBi

The functions of main ICs are mentioned below.

1. Bluetooth module (IC4):

1) MT6622 acts as the 2.4GHz radio core of Bluetooth module IC4.
2) 26MHz crystal provides clock for Bluetooth RF IC MT6622.
3) BM5064 acts as DSP core and CODEC.
4) 32.768kHz crystal provides clock for BM5064.

2. Audio portion:

1) IC1 (KA8227) is stereo power amplifier for loudspeakers and Line-Out.
2) IC7 (D4558) is RIAA equalizer of the stereo phono pick-up.

Channel Frequency Table of Bluetooth Module

CH. NO.	FRE.	Hex Value		CH. NO.	FRE.	Hex Value		CH. NO	FRE.	Hex Value		CH. NO	FRE.	Hex Value
CH0	2402MHz	0		CH26	2428MHz	1A		CH52	2454MHz	34		CH78	2480MHz	4E
CH1	2403MHz	1		CH27	2429MHz	1B		CH53	2455MHz	35				
CH2	2404MHz	2		CH28	2430MHz	1C		CH54	2456MHz	36				
CH3	2405MHz	3		CH29	2431MHz	1D		CH55	2457MHz	37				
CH4	2406MHz	4		CH30	2432MHz	1E		CH56	2458MHz	38				
CH5	2407MHz	5		CH31	2433MHz	1F		CH57	2459MHz	39				
CH6	2408MHz	6		CH32	2434MHz	20		CH58	2460MHz	3A				
CH7	2409MHz	7		CH33	2435MHz	21		CH59	2461MHz	3B				
CH8	2410MHz	8		CH34	2436MHz	22		CH60	2462MHz	3C				
CH9	2411MHz	9		CH35	2437MHz	23		CH61	2463MHz	3D				
CH10	2412MHz	A		CH36	2438MHz	24		CH62	2464MHz	3E				
CH11	2413MHz	B		CH37	2439MHz	25		CH63	2465MHz	3F				
CH12	2414MHz	C		CH38	2440MHz	26		CH64	2466MHz	40				
CH13	2415MHz	D		CH39	2441MHz	27		CH65	2467MHz	41				
CH14	2416MHz	E		CH40	2442MHz	28		CH66	2468MHz	42				
CH15	2417MHz	F		CH41	2443MHz	29		CH67	2469MHz	43				
CH16	2418MHz	10		CH42	2444MHz	2A		CH68	2470MHz	44				
CH17	2419MHz	11		CH43	2445MHz	2B		CH69	2471MHz	45				
CH18	2420MHz	12		CH44	2446MHz	2C		CH70	2472MHz	46				
CH19	2421MHz	13		CH45	2447MHz	2D		CH71	2473MHz	47				
CH20	2422MHz	14		CH46	2448MHz	2E		CH72	2474MHz	48				
CH21	2423MHz	15		CH47	2449MHz	2F		CH73	2475MHz	49				
CH22	2424MHz	16		CH48	2450MHz	30		CH74	2476MHz	4A				
CH23	2425MHz	17		CH49	2451MHz	31		CH75	2477MHz	4B				
CH24	2426MHz	18		CH50	2452MHz	32		CH76	2478MHz	4C				
CH25	2427MHz	19		CH51	2453MHz	33		CH77	2479MHz	4D				

MT6622

Bluetooth V2.1+EDR/V3.0 single chip

Version: 1.5

Release date: 2013-11-25

For MVSilicon Only

© 20112008 - 201320122012- 2009 MediaTek Inc.

This document contains information that is proprietary to MediaTek Inc.

Unauthorized reproduction or disclosure of this information in whole or in part is strictly prohibited.

Specifications are subject to change without notice.

For MVSilicon Only

This document contains information that is proprietary to MediaTek Inc.

Unauthorized reproduction or disclosure of this information in whole or in part is strictly prohibited.

Document Revision History

Revision	Date	Author	Description
0.1	2011-03-09	PC Lin	Initial Draft
1.0	2011-05-30	Jason Hung	Fix BT Sleep mode power description and update order information
1.1	2011-06-15	Jason Hung	Add new part number of WLCSP package
1.2	2011-09-19	Jason Hung	Add interface signal specification
1.3	2011-11-04	Jason Hung	Add interface signal specification, WLCSP POD
1.4	2012-03-28	Jason Hung	Add support Bluetooth spec. V3.0
1.5	2012-05-29	Jason Hung	Fix some typo

For MVSilicon Only

This document contains information that is proprietary to MediaTek Inc.

Unauthorized reproduction or disclosure of this information in whole or in part is strictly prohibited.

TABLE OF CONTENTS

Document Revision History **1**

1 System overview **4**

1.1 General description 4

1.2 Features 4

1.3 Applications 5

1.4 Block diagram 6

2 Product description **7**

2.1 Pin description 7

2.2 Package information 10

2.2.1 QFN40 pin map 10

2.2.2 QFN40 Package dimensions 11

2.2.3 WLCSP ball map 12

2.2.4 WLCSP Package dimensions 13

2.2.5 Top marking 14

2.3 Ordering information 15

3 Electrical characteristics **16**

3.1 Absolute maximum ratings 16

3.2 Recommended operating range 16

3.3 DC characteristics of digital IO 16

3.4 Typical current consumption 17

3.5 Regulator specifications 17

4 Functional description **19**

4.1 Power subsystem 19

4.2 Clock generation 19

4.3 Chip operating mode and power management 20

For MVSilicon Only

This document contains information that is proprietary to MediaTek Inc.

Unauthorized reproduction or disclosure of this information in whole or in part is strictly prohibited.

4.4 MCU subsystem....22
4.5 Bluetooth subsystem....22
5 Interface Descriptions....24
5.1 UART Interface....24
5.2 PCM Interface....25
5.2.1 Data format....25
5.2.2 Detailed Interface Descriptions....27
5.2.3 PCM timing information....29
5.3 Wireless LAN Co-existence Interface....31
5.4 Specification of External Reference Clock....32
5.5 LDO28EN/SYSRST__B/SRCLKENA Timing Information....33
6 Bluetooth radio characteristics....34
6.1 Basic rate....34
6.1.1 Receiver specifications....34
6.1.2 Transmitter specifications....34
6.2 Enhanced data rate....35
6.2.1 Receiver specifications....35
6.2.2 Transmitter specifications....36
7 Terminology....37

For MVSilicon Only

This document contains information that is proprietary to MediaTek Inc.
Unauthorized reproduction or disclosure of this information in whole or in part is strictly prohibited.

1 System overview

1.1 General description

MT6622 is a monolithic single chip that integrates Bluetooth V2.1+EDR/V3.0. It can be incorporated in varieties of mobile platforms to provide Bluetooth connectivity.

MT6622 is available in QFN40 and WLCSP package. With a very small package size and require few external BOM components, a compact footprint can be designed for today's slim mobile device.

Unparalleled performance of sensitivity and interference rejection featured, MT6622 also provides uncompromising low power performance. It also supports 10dBm transmit power with efficient power control, which provide the user with excellent link quality.

1.2 Features

- **BT Radio features**
  - Fully compliant with Bluetooth specification V2.1+EDR / V3.0
  - Low out-of-band spurious emissions supports simultaneous operation with GPS, GSM/GPRS worldwide radio systems
  - Integrated balun
  - Supports low power scan mode support
  - Fully integrated power amplifier provides 10dBm (class 1) output power
  - -95dBm sensitivity with excellent interference rejection performance
  - AGC dynamically adjusts receiver performance in changing environments
- **BT Baseband features**
  - Up to 4 simultaneous active ACL links
  - Support SCO and eSCO link with re-transmission
  - Scatternet support: Up to 4 piconets simultaneously with background inquiry/page scan
  - Sniff mode support
  - AFH and PTA collaborative support for WLAN/BT coexistence
  - PCM interface and built-in transcoders for A-law, μ-law and linear voice with re-transmission support.

For MVSilicon Only

This document contains information that is proprietary to MediaTek Inc.

Unauthorized reproduction or disclosure of this information in whole or in part is strictly prohibited.

- Built-in hardware modem engine for access code correlation, header error correction, forward error correction, CRC, whitening, and encryption
- Channel quality driven data rate adaptation
- Channel assessment for AFH

- **Platform features**
  - 32-bit RISC microprocessor
  - Integrated LDO enables direct connection to battery.
  - Wide range of frequency of crystal and external reference clock support.
  - High speed UART supports up to 4Mbps baud rate
  - Built-in RAM and ROM with patch system.
  - External LPO clock support for sleep mode.
  - Supports standard HCI interface.
  - Idle mode and sleep mode design enables ultra low power performance

1.3 Applications

A typical example with connection to a baseband chip of a cellular phone is illustrated in **Figure 1**. The UART interface supports hardware flow control as well as high-speed baud rate connection. Both master and slave operating mode are provided on PCM interface with programmable data frequency to connect to the voice channel on the host chip. The PTA interface accommodates different arbitration scheme in which channel utilization can be efficiently performed in a co-existence environment. The external reference clock interface supports wide ranges of frequency common to mobile phone applications.

For MVSilicon Only

This document contains information that is proprietary to MediaTek Inc.

Unauthorized reproduction or disclosure of this information in whole or in part is strictly prohibited.

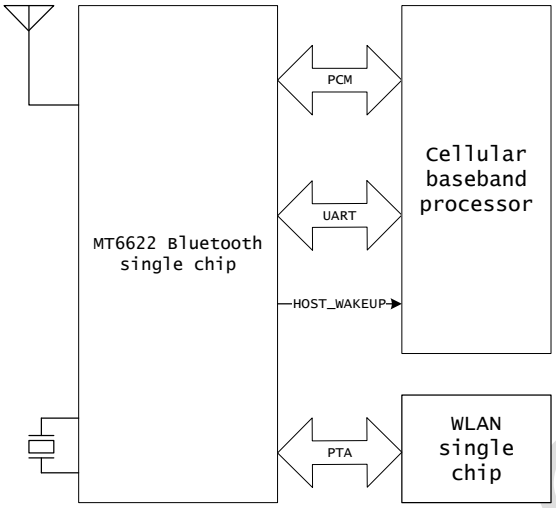

Figure 1 Mobile phone application.

1.4 Block diagram

The connections between internal modules, as well as, external interfaces can be found in **Figure 2**. The Bluetooth transceiver section of MT6622 incorporates the complete receiving and transmitting paths, including PLL, VCO, LNA, PA, modulator, and demodulator. The Bluetooth baseband signal processor incorporates hardware engines to perform frequency hopping, error correcting, whitening, encrypting, data packet assembling.

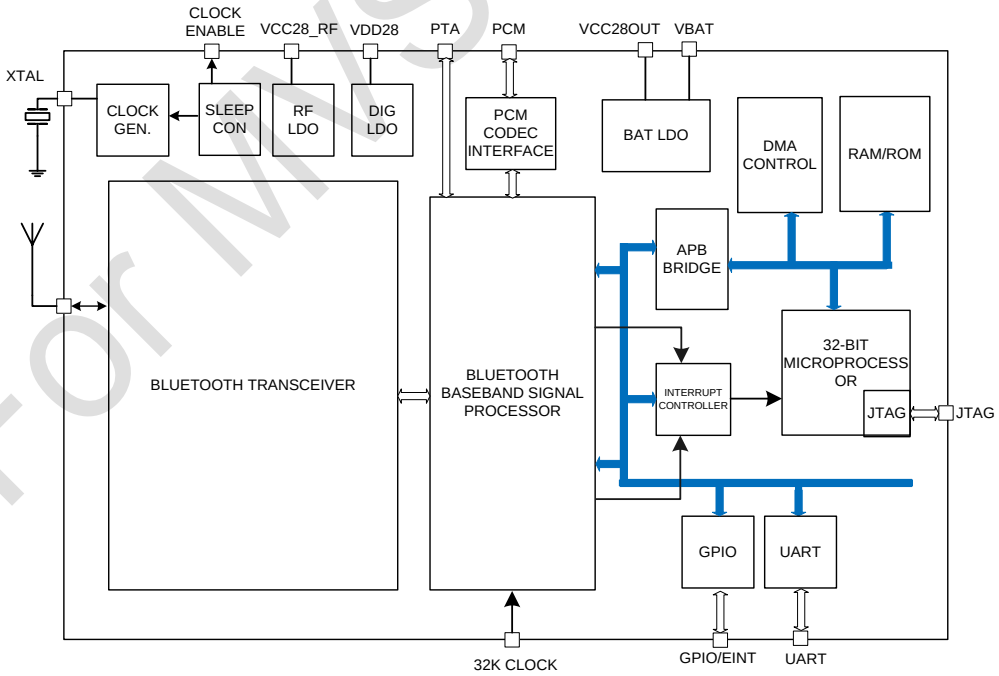

Figure 2 MT6622 functional block diagram

For MVSilicon Only

This document contains information that is proprietary to MediaTek Inc.

Unauthorized reproduction or disclosure of this information in whole or in part is strictly prohibited.

2 Product description

2.1 Pin description

QFN40 lead	WLCSP Ball	Pin Name	Pin description	Default PU/PD	I/O	Supply domain
Test, reset, and clocks						
38	B5	TESTMODE	Test mode enable 1: test mode. 0: normal mode.	PD	Input	VDD28
2	C4	SYSRST_B	External system reset active low 1: normal mode. 0: reset.	PU	Input	VDD28
13	D1	OSC_IN	Crystal input or external clock input	N/A	Input	AVDD28_SX
37	D6	SRCLKENA	Source clock enable to the host or the oscillator. 1: ask host to give MT6622 reference clock. (BT Active or Idle mode) 0: inform host that MT6622 doesn't need reference clock. (BT Sleep or power off mode)	N/A	Output	VDD28
39	E6	EXT32K	External 32KHz or 32.768KHz low power clock input. Its worst case accuracy is +-250ppm (same as BT spec).	PD	Input	VDD28
26		ECLK_SEL	External clock select 0: enable crystal oscillator in MT6622. 1: disable crystal oscillator in MT6622 but enable external clock path.	N/A	Input	VDD28
UART interface						
40	C5	UTXD1	UART data output active high	PU	Input	VDD28
1	D5	URXD1	UART data input active high	PU	Input	VDD28
PCM interface						
4	D4	PCMCLK	PCM interface clock. Default in slave mode.	PD	Input	VDD28
3	E5	PCMSYNC	PCM interface sync. Default in slave mode.	PD	Input	VDD28
7	E3	PCMOUT	PCM synchronous data out	PU	Output	VDD28
6	E4	PCMIN	PCM synchronous data in	PU	Input	VDD28
PTA interface and programmable I/O						
27	A6	GPIO4/BT2WIFI	Programmable input/output/WiFi coexistence	PD	Input	VDD28

For MVsilicon Only

This document contains information that is proprietary to MediaTek Inc.

Unauthorized reproduction or disclosure of this information in whole or in part is strictly prohibited.

24	A5	WIFI2BT	WiFi coexistence	PD	Input	VDD28
36	B6	GPIO0	Programmable input/output	PU	Input	VDD28
28		GPIO1	Programmable input/output	PU	Input	VDD28
25		GPIO2	Programmable input/output	PD	Input	VDD28
29		GPIO3	Programmable input/output	PU	Input	VDD28
30		GPIO6	Programmable input/output	PD	Input	VDD28
31		GPIO7	Programmable input/output	PU	Input	VDD28
32		GPIO8	Programmable input/output	PD	Input	VDD28
33		GPIO9	Programmable input/output	PD	Input	VDD28
Bluetooth radio interface						
22	A2	RF2G_N	RF input	N/A	Input	AVDD28_TRX
21	A1	AVSS_BALUN	RF BALUN ground	N/A		
20	B1	REXT (RES_IN)	15K ohm biasing resistor	N/A		
LDOs						
12	C3	LDO28EN	VBAT linear regulator enable control 1: power on MT6622. (voltage spec: VIH>1.5V) 0: power down MT6622. (voltage spec: VIL<0.8V)	N/A	Input	
11	E1	VBAT	VBAT linear regulator input	N/A	Input	
10	E2	VCC28OUT	VBAT linear regulator output for Bluetooth and digital circuit.	N/A	Output	
8		VCC28_BBLDO	Digital linear regulator input	N/A	Input	
9	D3	LDODVOUT12	Digital linear regulator output	N/A	Output	
Power supplies						
35	C6	VDD28	Digital I/O power supply	N/A	Input	
5, 34	D3	VDD12	Digital core power supply	N/A		
14, 15	C1	AVDD28_SX	Bluetooth RF 2.8V power supply	N/A	Input	
23	A3	AVDD28_TRX	Bluetooth RF 2.8V power supply	N/A	Input	
E-PAD	A4	DVSS	Digital ground	N/A		
E-PAD	B2,B4,C2,D2	AVSS28_RF	RF/PMU ground	N/A		
Debug and unconnected pins						
18		T1N	RF test pin	N/A	Output	

For MVSilicon Only

This document contains information that is proprietary to MediaTek Inc.

Unauthorized reproduction or disclosure of this information in whole or in part is strictly prohibited.

17	B3	T1P	RF test pin	N/A	Output	
16		VCO_MONITOR	RF test pin	N/A	N/A	
19		N/C	Reserved	N/A		

Table 1 Pin description

For MVSilicon Only

This document contains information that is proprietary to MediaTek Inc.

Unauthorized reproduction or disclosure of this information in whole or in part is strictly prohibited.

2.2 Package information

2.2.1 QFN40 pin map

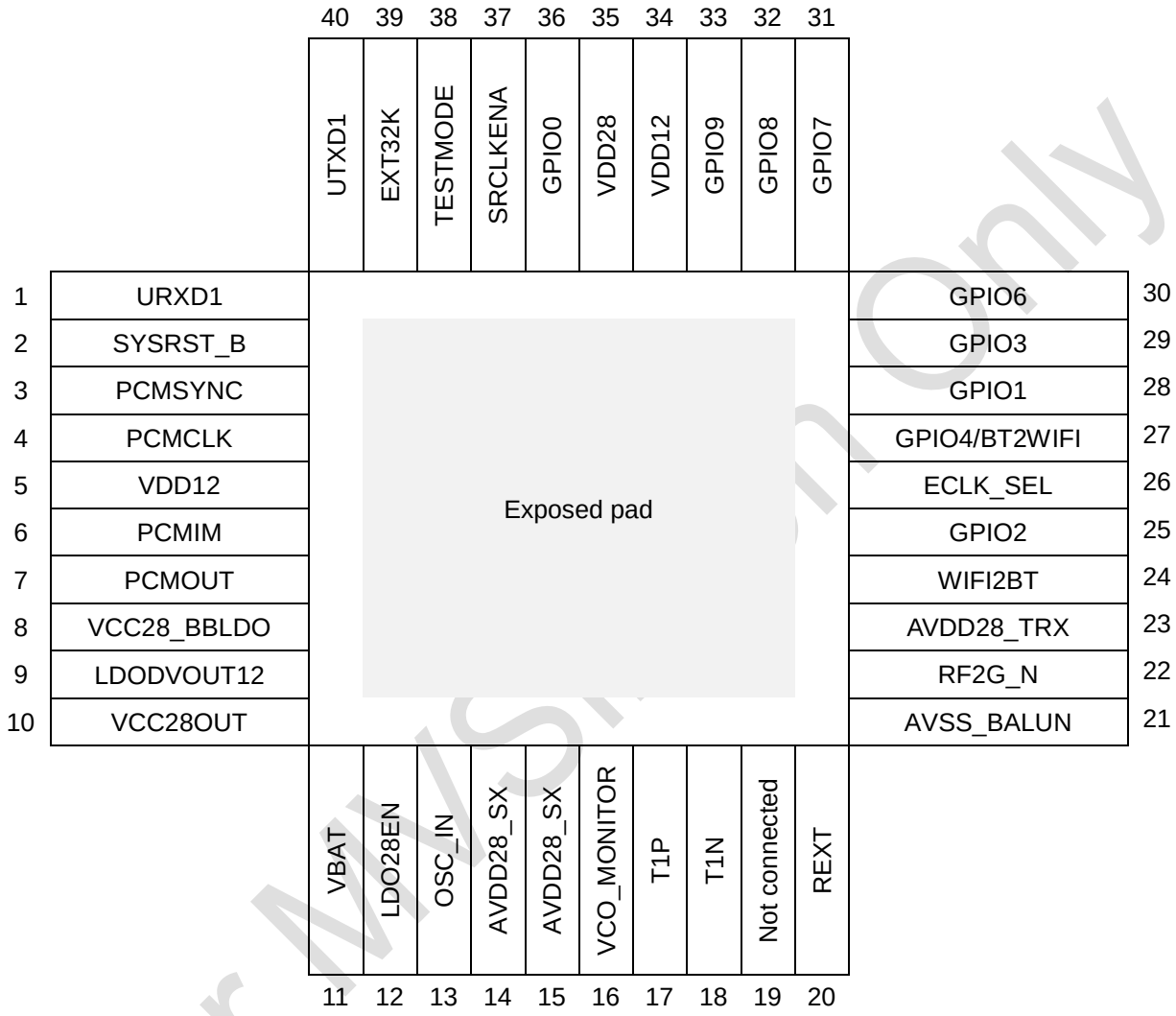

Figure 3 Top view of MT6622 QFN pin-out.

For MVS Team Only

This document contains information that is proprietary to MediaTek Inc.

Unauthorized reproduction or disclosure of this information in whole or in part is strictly prohibited.

2.2.2 QFN40 Package dimensions

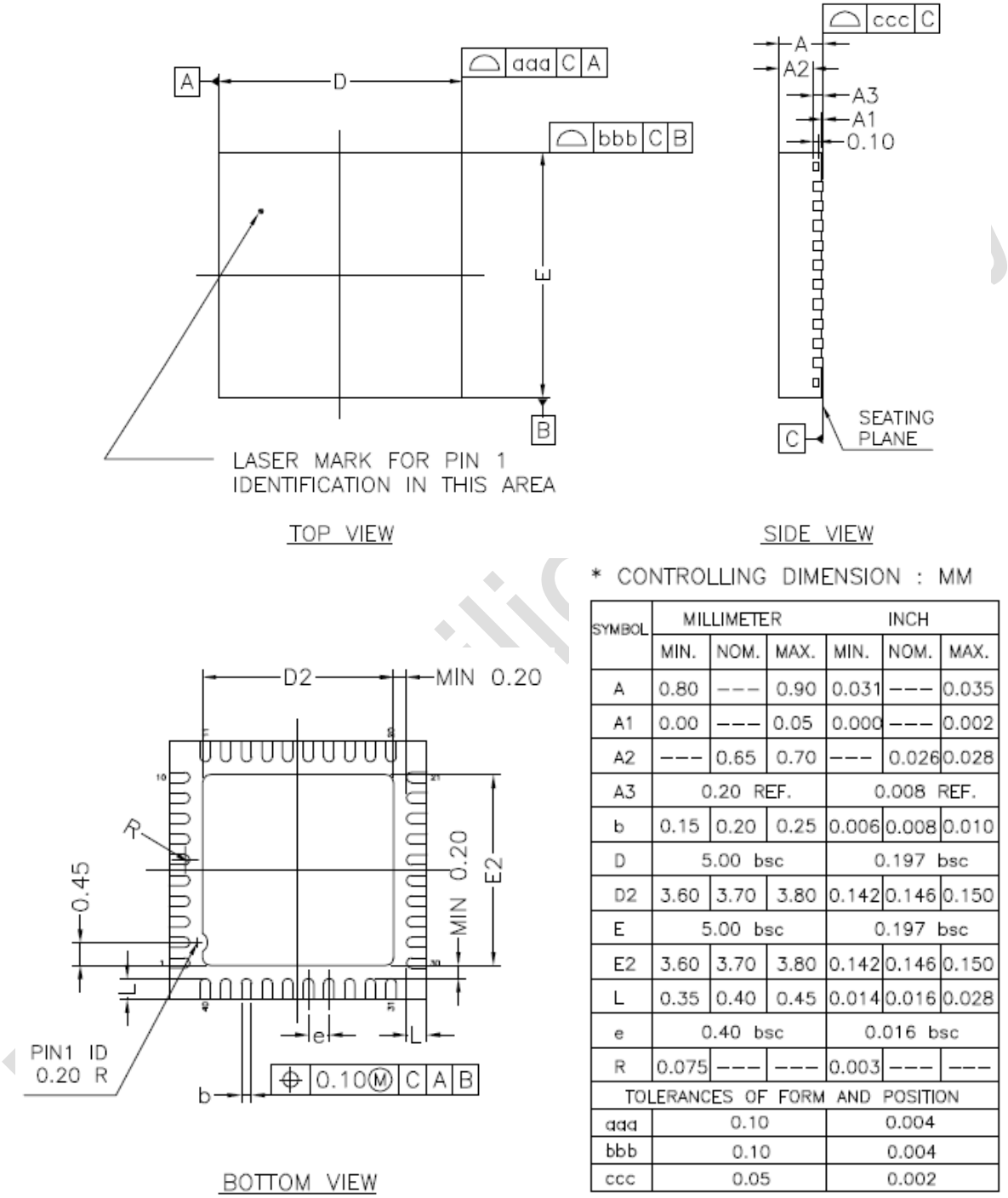

* CONTROLLING DIMENSION : MM

SYMBOL	MILLIMETER			INCH		
	MIN.	NOM.	MAX.	MIN.	NOM.	MAX.
A	0.80	---	0.90	0.031	---	0.035
A1	0.00	---	0.05	0.000	---	0.002
A2	---	0.65	0.70	---	0.026	0.028
A3	0.20 REF.			0.008 REF.		
b	0.15	0.20	0.25	0.006	0.008	0.010
D	5.00 bsc			0.197 bsc		
D2	3.60	3.70	3.80	0.142	0.146	0.150
E	5.00 bsc			0.197 bsc		
E2	3.60	3.70	3.80	0.142	0.146	0.150
L	0.35	0.40	0.45	0.014	0.016	0.028
e	0.40 bsc			0.016 bsc		
R	0.075	---	---	0.003	---	---
TOLERANCES OF FORM AND POSITION						
aaa	0.10			0.004		
bbb	0.10			0.004		
ccc	0.05			0.002		

Figure 4 **Package outline and dimensions of QFN40 5mm x 5mm, 0.4mm pitch Package**

 © 2011 - 2013 MediaTek Inc.

This document contains information that is proprietary to MediaTek Inc.

Unauthorized reproduction or disclosure of this information in whole or in part is strictly prohibited.

2.2.3 WLCSP ball map

MT6622 WLCSP is a compact 30-pin chip-scale package. The ball coordinate is listed in Table 2.

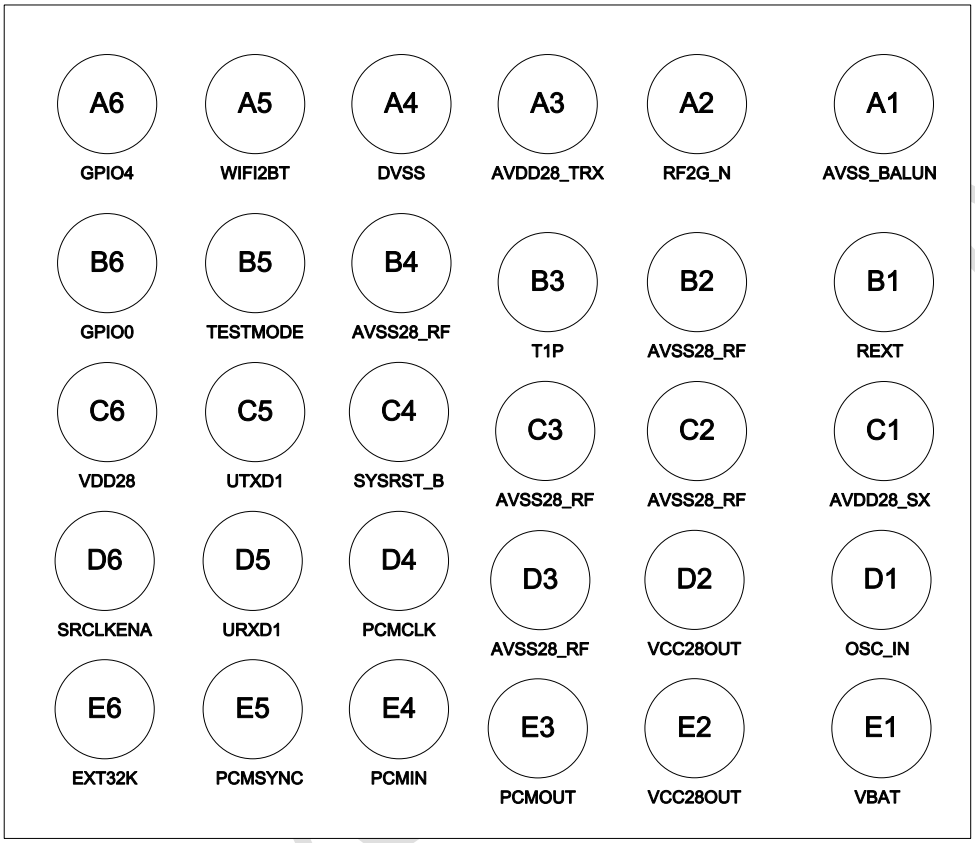

Figure 5 Bottom view of MT6622 WLCSP ball map

For MV

This document contains information that is proprietary to MediaTek Inc.

Unauthorized reproduction or disclosure of this information in whole or in part is strictly prohibited.

2.2.4 WLCSP Package dimensions

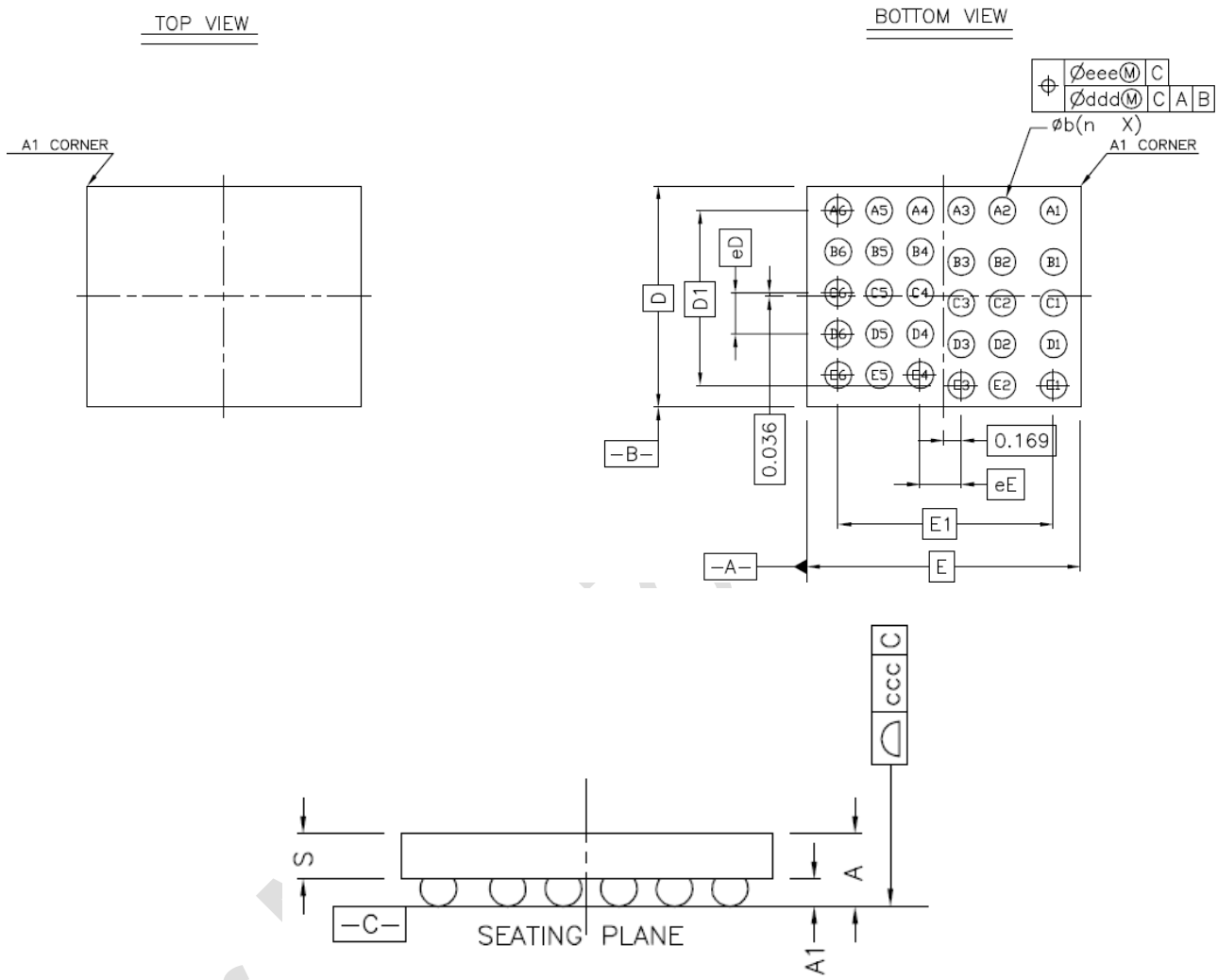

Figure 6 Package outline and dimensions of WLCSP 3.047mm x 2.552mm Package

The detailed ball coordinates is shown below for accurate reference:

Ball	Location X (um)	Location Y (um)	Ball	Location X (um)	Location Y (um)
A1	1068.97	836.07	D1	1068.97	-436.07
A2	568.97	836.07	D2	568.97	-436.07
A3	168.97	836.07	D3	168.97	-436.07
A4	-231.03	836.07	D4	-231.03	-336.07
A5	-631.03	836.07	D5	-631.03	-336.07
A6	-1031.03	836.07	D6	-1031.03	-336.07
B1	1068.97	336.07	E1	1068.97	-836.07
B2	568.97	336.07	E2	568.97	-836.07
B3	168.97	336.07	E3	168.97	-836.07

 © 2011 - 2013 MediaTek Inc.

This document contains information that is proprietary to MediaTek Inc.

Unauthorized reproduction or disclosure of this information in whole or in part is strictly prohibited.

B4	-231.03	436.07	E4	-231.03	-736.07
B5	-631.03	436.07	E5	-631.03	-736.07
B6	-1031.03	436.07	E6	-1031.03	-736.07
C1	1068.97	-63.93			
C2	568.97	-63.93			
C3	168.97	-63.93			
C4	-231.03	36.07			
C5	-631.03	36.07			
C6	-1031.03	36.07			

Table 2 WLCSP Ball Coordinates

2.2.5 Top marking

```
MT6622N  : Part number
DDDD     : Date code
&        : Subcontractor code
BBBBBBB  : Lot number
```

Figure 7 MT6622N product marking (QFN Package)

```
MT6622P  : Part number
DDDD     : Date code
&        : Subcontractor code
BBBBBBB  : Lot number
```

Figure 8 MT6622P product marking (WLCSP Package)

MVSilicon Only

This document contains information that is proprietary to MediaTek Inc.

Unauthorized reproduction or disclosure of this information in whole or in part is strictly prohibited.

```
MT6622BP : Part number
DDDD     : Date code
&        : Subcontractor code
BBBBBBB  : Lot number
```

Figure 9 MT6622BP product marking (WLCSP Package)

2.3 Ordering information

Part number	Package	Operational temperature range
MT6622N/B-L	5x5x0.9 mm 40-QFN	-25~85°C
MT6622P/B-L	3.047x2.552x0.55mm WLCSP with crystal mode	-25~85°C
MT6622BP/B-L	3.047x2.552x0.55mm WLCSP with co-clock mode	-25~85°C

Table 3 MT6622 ordering information

For MVSilicon Only

This document contains information that is proprietary to MediaTek Inc.

Unauthorized reproduction or disclosure of this information in whole or in part is strictly prohibited.

3 Electrical characteristics

3.1 Absolute maximum ratings

Parameter	Description	Min	Max	Unit
VBATT	Battery regulator supply voltage	-0.3	4.73	V
VDDP	I/O supply voltage	-0.3	3.63	V
VDIG	Digital regulator supply voltage	-0.3	3.63	V
VCC	Analog supply voltage	-0.3	3.63	V
VDD	Regulated digital circuit supply voltage	-0.3	1.32	V
TST	Storage temperature	-55	+125	°C
RFMAX	Maximum RF input level	-	+5	dBm

Table 4 Absolution maximum ratings

3.2 Recommended operating range

Parameter	Description	Min	Max	Unit
VBATT	Battery regulator supply voltage	3.2	4.3	V
VDDP	I/O supply voltage	1.62	3.08	V
VDIG	Digital regulator supply voltage	2.52	3.08	V
VCC	Analog supply voltage	2.52	3.08	V
VDD	Regulated digital circuit supply voltage	1.08	1.32	V
TOP	Operating temperature	-25	+85	°C

Table 5 Recommended operating range

3.3 DC characteristics of digital IO

Parameter	Description	Min	Max	Unit
V_{IL} (VDD28 = 2.8v)	Input logic low voltage	-0.3	0.25*VDD28	V
V_{IH} (VDD28 = 2.8v)	Input logic high voltage	0.75*VDD28	VDD28+0.3	V
V_{OL} (VDD28 = 2.8v)	Output logic low voltage		0.15*VDD28	V
V_{IH} (VDD28 = 2.8v)	Output logic high voltage	0.85*VDD28		V
V_{IL} (VDD28 = 1.8v)	Input logic low voltage	-0.3	0.25*VDD28	V
V_{IH} (VDD28 = 1.8v)	Input logic high voltage	0.75*VDD28	VDD28+0.3	V
V_{OL} (VDD28 = 1.8v)	Output logic low voltage		0.15*VDD28	V
V_{IH} (VDD28 = 1.8v)	Output logic high voltage	0.85*VDD28		V

For MVSilicon Only

This document contains information that is proprietary to MediaTek Inc.

Unauthorized reproduction or disclosure of this information in whole or in part is strictly prohibited.

Table 6 DC characteristics of digital IO

3.4 Typical current consumption

Operating mode	Current consumption	Unit
Deep sleep mode	50	µA
Bluetooth continuous transmit (TX output power: 10dBm)	49	mA
Bluetooth continuous receive (TX power: -90dBm)	34	mA
Bluetooth SCO connection, HV3 packets	-	mA
Bluetooth sniff mode + page scan (Page scan interval = 1.28 sec, sniff interval = 500ms.)	-	mA
Bluetooth page scan + inquiry scan (Page scan interval = 1.28s, inquiry scan interval = 2.56s)	0.5	mA
Bluetooth page scan (Page scan interval = 1.28s)	0.34	mA

Table 7 Current consumption specifications

3.5 Regulator specifications

Parameter	Min.	Typ.	Max.	Unit
Input voltage	3.2	-	4.3	V
Output voltage	2.52	2.8	3.08	V
Maximum load current	-	-	100	mA
Quiescent current	-	30	-	µA
Load capacitance (VCC28_BT)	1	-	10	µF
Load capacitor ESR	-	-	500	mΩ
Line regulation	-	1.5	-	mV/V
Load regulation (Iload < 70mA)	-	-	50	mV
PSRR@1KHz	-	-60	-	dB
Turn on time (Cload = 2uF)	-	-	400	µs

Table 8 Battery linear regulator electrical specifications

Parameter	Min.	Typ.	Max.	Unit
Input voltage	2.52	2.8	3.08	V
Output voltage	1.08	1.2	1.32	V
Maximum load current	-	-	40	mA
Quiescent current	-	25	-	µA
Quiescent current (sleep mode)	-	9	-	µA
Load capacitance	-	1	-	µF

For MVSilicon Only

This document contains information that is proprietary to MediaTek Inc.

Unauthorized reproduction or disclosure of this information in whole or in part is strictly prohibited.

Load capacitor ESR	-	-	500	mΩ
Line regulation	-	1.5	-	mV/V
Load regulation (Iload < 40mA)	-	55mV	-	mV
Turn on time	-	-	400	μs

Table 9 Digital linear regulator electrical specifications

For MVSilicon Only

This document contains information that is proprietary to MediaTek Inc.

Unauthorized reproduction or disclosure of this information in whole or in part is strictly prohibited.

4 Functional description

4.1 Power subsystem

MT6622 contains several LV (low voltage, 2.8V to 1.5V) linear regulators to provide power supply for every power domain, including RF circuitry and digital core circuitry. Furthermore, it has built-in BAT linear regulator which allows the chip to connect directly to Li-Ion battery power supply. The supported battery voltage ranges from 3.2V to 4.3V.

The input pin LDO28EN is used by the host controller to turn on and off the BAT regulator. The host can control this pin to enable the whole MT6622 system. The enable voltage (V_{IH}) of pin LDO28EN is 1.5V. Please be sure that the control signal meets this requirement in order for the system to operate correctly.

The built-in LV linear regulators for RF circuitry are cap-less regulators. It provides high PSRR for achieving excellent RF performance. The power controls for these RF LDOs are maintained internally by digital controller for optimized power consumption.

The DIG (digital) LV regulator requires an external capacitor. When the 1.2V power is supplied from the regulator on VDD12 pins, an internal POR (Power-On Reset) will be generated to start the system. An external system reset to start the system is optional according to the application requirement.

The power subsystem is illustrated in Figure 10.

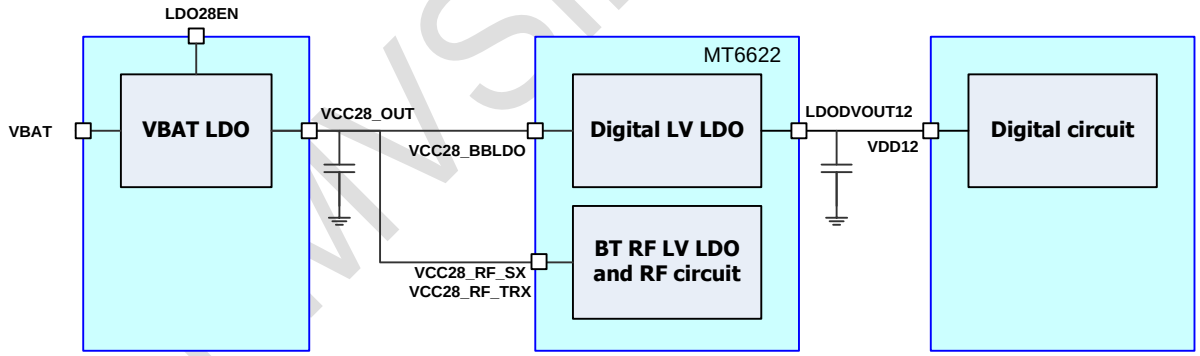

Figure 10 Power subsystem diagram

4.2 Clock generation

There are two clock domains inside MT6622. One is the SYSTEM reference clock which is used for the Bluetooth and MCU system operations. The second is the LPO clock, which is a low-power 32.768KHz reference clock used to maintain Bluetooth link during sleep mode operations.

MT6622 has two options for the SYSTEM clock source input. It can either be a one-pin crystal input, or it can come from external clock source.

For MVSilicon Only

This document contains information that is proprietary to MediaTek Inc.

Unauthorized reproduction or disclosure of this information in whole or in part is strictly prohibited.

MT6622 supports most widely used clock frequencies in the mobile handset platform. They include 13, 16, 19.2, 26, and 32MHz.

To save system BOM cost, the SYSTEM clock can be shared with the clocks available on the mobile handset platform. For example, the reference clock used for mobile base-band chipset can also be used as the MT6622 source clock. In this configuration, an output pin SRCLKENA from MT6622 is used as the enable signal for the external clock source. The generation of the signal is coupled to the internal sleep mode control function.

The input frequencies can be selected by GPIO trapping or detected automatically based on the availability of externally supplied 32.768KHz clock.

The LPO clock can come from the host chip in both QFN40 and WLCSP package.

4.3 Chip operating mode and power management

MT6622 is optimized for low power operation of Bluetooth. With sophisticated built-in state control and advanced power management, the operating mode can be changed seamlessly while achieving minimum power consumption.

MT6622's operating modes can be categorized into 4 major modes:

- Chip power off mode
- Power-on Init mode
- Bluetooth standalone operation mode
- System deep sleep mode

For each of these major operating modes, the individual subsystems may be under different power states as the table below shows:

Operating Modes	Platform Subsystem State	Bluetooth Subsystem State
Chip Power Off	Power off	Power off
Power-on Init	Active	Power-down
System Deep Sleep	Sleep	Power-down
BT Standalone	Active/Idle	Active
	Sleep	Sleep

Table 10 Operating Modes

The power states for each subsystem are further described below:

Chip-level Power States

For MVSilicon Only

This document contains information that is proprietary to MediaTek Inc.

Unauthorized reproduction or disclosure of this information in whole or in part is strictly prohibited.

Power-off mode: Power supply is not enabled or LDO28EN is low. The entire chip is powered off.

Power-on Init mode: When MT6622 is powered on, it first enters the init mode. In this mode, an internal digital PLL is turned on to supply the clock for baseband circuit.

Deep Sleep mode: No link needs to be maintained, the baseband controller can enter sleep mode in order to turn off most of the Bluetooth related circuit in MT6622. In deep sleep mode, the system could be awakened by a external wake up signal from the host controller. During always sleep mode, only the LPO clock reference is active and the Bluetooth baseband controller doesn't maintain any link at all.

Platform Subsystem Power States

Platform Active mode: It is defined as the state where the platform system is in operation.

Platform Idle mode: When firmware no longer has tasks pending to be completed, then the MCU and the relevant buses can be put under power down mode to save current consumption. Under this mode, the platform peripheral system are still in operation and can therefore still receive traffic from the host.

Bluetooth Subsystem Power States

BT Power-down mode: It is defined as the state where BT related RF circuitries and LDO are turned off, and Bluetooth digital circuitries have no clock supply.

BT Active mode: It is defined as the state that RF circuit is enabled to transmit or receive data. Since Bluetooth is a TDD (Time-Division Duplex) system, only TX or RX circuit will be turned on at the same time.

BT Idle mode: When the firmware finishes its task and starts to wait for next hardware trigger, it forces the hardware to enter this mode. In this mode. Part of the logic, like MCU, will enter a low power mode. RF circuit might still be operating in the mode.

BT Sleep mode: For some Bluetooth scenarios, where all links are in low power mode, the baseband controller can enter sleep mode in order to turn off most of the Bluetooth related circuit in MT6622. In sleep mode, the system could be awakened after sleep time expired or by a external wake up signal from the host controller. During sleep mode, only the LPO clock reference is active and the Bluetooth baseband controller maintains the correct link timing based on this reference signal.

	Chip power off	Chip power on Init	Deep Sleep	Platform Active	Platform Idle	BT Power down	BT Active	BT Sleep
VBAT linear regulator	OFF	ON	ON	ON	ON	ON	ON	ON
Digital LV linear regulator	OFF	ON	ON	ON	ON	ON	ON	ON

For MVSilicon Only

This document contains information that is proprietary to MediaTek Inc.

Unauthorized reproduction or disclosure of this information in whole or in part is strictly prohibited.

Bluetooth Digital circuitry	OFF	System clock domain is ON. LPO clock domain is OFF.	Bluetooth Baseband is powered-down with clock supply turned off			Bluetooth Baseband clock is turned off	System clock domain is ON. LPO clock domain is OFF. Bluetooth low power controller is active with LPO clock.	System clock domain is ON. Part of System clock based circuitry might be turned off by the firmware. LPO clock domain is ON.
Bluetooth RF LV linear regulator and BT RF circuitry	OFF	Crystal oscillator is ON. Other RF circuitry is OFF.	OFF	Crystal oscillator and PLL are ON. Other RF circuitry is OFF.	Crystal oscillator and PLL are ON. Other RF circuitry is OFF.	Crystal oscillator and PLL are ON. Other RF circuitry is OFF.	Crystal oscillator and PLL are ON. The other RF circuitry might be in RX or TX modes.	Crystal oscillator and PLL are ON. The other RF circuitry might be in RX or TX modes.

Table 11 Power state description for power management

4.4 MCU subsystem

The MCU (Micro-Controller Unit) subsystem contains the 32-bit RISC microprocessor, internal memory and the ROM patch function. It also contains the UART interface controller and the power/clock management function.

4.5 Bluetooth subsystem

The Bluetooth subsystem contains the Bluetooth baseband subsystem and the Bluetooth RF subsystem.

The Bluetooth baseband subsystem contains a baseband processor which supports timing control, bit-stream processing, encryption, frequency hopping, and modulation/demodulation. It also contains the audio codec, Wi-Fi coexistence interface controller, and a sleep mode controller.

The Bluetooth RF subsystem contains a fully integrated transceiver.

For TX path, the baseband transmit data is digitally modulated in the baseband processor, then up-converted to 2.4GHz RF channels through DA converter, filter, IQ up-converter, and the power amplifier. The power amplifier is capable of transmitting 10dBm power for class-1.5 operation.

For RX path, MT6622 is a low IF receiver architecture. An image-reject mixer down-converts the RF signal to the IF with the LO from the synthesizer, which could support different clock frequencies as the reference clock

For MVSilicon Only

This document contains information that is proprietary to MediaTek Inc.

Unauthorized reproduction or disclosure of this information in whole or in part is strictly prohibited.

as described in section 4.2. The mixer output is then converted to digital signal, down-converted to baseband for demodulation. A fast AGC enables the effective discovery of device within the dynamic range of the receiver.

MT6622 features self calibration schemes to compensate the process and temperature variation to maintain high performance. Those calibrations are performed automatically right after system boot-up.

For MVSilicon Only

This document contains information that is proprietary to MediaTek Inc.

Unauthorized reproduction or disclosure of this information in whole or in part is strictly prohibited.

5 Interface Descriptions

5.1 UART Interface

MT6622 utilizes the Universal Asynchronous Receiver Transmitter (UART) interface as its host control interface. This UART interface supports flexible configurations, as listed in the table below.

Interface Configuration Parameters	Supported values
Data length	8 bits
Flow control	Hardware RTS/CTS Software RTS/CTS NONE
Parity	Even/Odd/None (Note: parity is only supported when Software flow control is disabled)
Stop bit length	1 or 2

Table 12 UART Interface Configurations

The electrical timing characteristic for the UART interface is illustrated below.

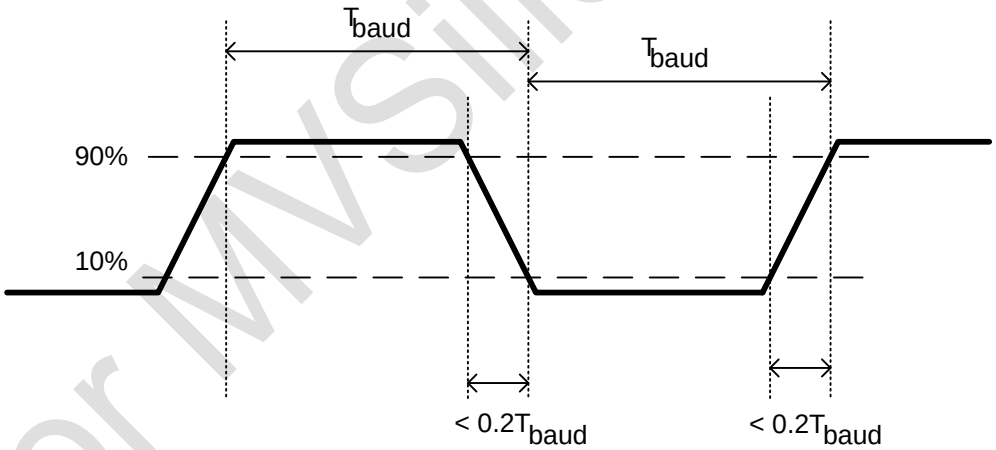

Figure 11 Electrical Timing Characteristics

In addition to the standard baud rates, high speed baud rates are also supported in order to meet the higher bandwidth requirements for EDR data transfers. The default supported baud rates by MT6622 are listed in the table below.

Baud Rate (bps)	Error
110	0.00%
300	0.00%

For MVSilicon Only

This document contains information that is proprietary to MediaTek Inc.

Unauthorized reproduction or disclosure of this information in whole or in part is strictly prohibited.

1200	0.00%
2400	0.00%
4800	0.00%
9600	0.01%
19200	-0.02%
38400	0.04%
57600	-0.08%
115200	-0.08%
230400	-0.08%
460800	0.64%
921600	-0.79%
3200000	0.00%

Table 13 Default UART Baud Rate Support

Other baud rates that are not shown in the default baud rate table above may also be supported through UART register configuration. However, system designers must take care in making sure that the total baud rate frequency mismatch between the 2 sides, along with the electrical signal timings, can still meet the 2% error margin required in order to sustain the rate of operation.

5.2 PCM Interface

5.2.1 Data format

MT6622 incorporates the Pulse Coded Modulation (PCM) interface, which can be used for Bluetooth voice data transfers between the MT6622 system and the host system. Using this interface, the voice signals can be transferred between the 2 devices continuously without mcu intervention for maximum power savings.

The MT6622 PCM interface supports most commonly used interface formats through user configuration. The supported formats are listed below.

Interface Configuration Parameters	Supported values
Line Interface Format	Linear/A-law/U-law
Data length	Linear: 13/14/15/16 bits A-law/U-law: 8 bits
Voice Sampling Rate	8KHz samples
PCM Clock/Sync Source	PCM Master Mode: clock and sync are internally generated PCM Slave Mode: clock and sync are from external
PCM Sync Rate	8KHz
PCM Clock Rate	PCM Master Mode: 64KHz/128KHz/256KHz/512KHz/1024KHz /2048KHz (A-law/U-law)

For MVSilicon Only

This document contains information that is proprietary to MediaTek Inc.

Unauthorized reproduction or disclosure of this information in whole or in part is strictly prohibited.

	128KHz/256KHz/512KHz/1024KHz/2048KHz (Linear) PCM Slave Mode: 64KHz ~ 2400KHz (A-law/U-aw) 128KHz ~ 2400KHz (Linear)
PCM Sync Format	Short sync or long sync
Data Ordering	MSB or LSB first (see configuration matrix for limitation)
Zero Padding	Yes (see configuration matrix for limitation)
Sign extension	Yes (see configuration matrix for limitation)

Table 14 PCM Interface Configurations

Based on the wide range of interface options, the supported configuration matrix is summarized as follows.

(Note that sign extension and zero padding are only relevant when the linear input bits are less than 16bits.)

Configurations	Sign Extension	Zero Padding	MSB First	LSB First	PCM Long Sync	PCM Short Sync
1		●	●		●	
2		●	●			●
3		●		●	●	
4		●		●		●
5	●		●		●	
6	●		●			●

Table 15 PCM Configuration Matrix Summary

For best quality, the recommended settings are:

16b linear CVSD + MSB First + short sync + 256 KHz PCM clock

The illustrations below give 2 common interface timing configuration examples.

Example: 16b linear PCM, 256KHz PCM clock, 8k sync

For MVSR Only

This document contains information that is proprietary to MediaTek Inc.

Unauthorized reproduction or disclosure of this information in whole or in part is strictly prohibited.

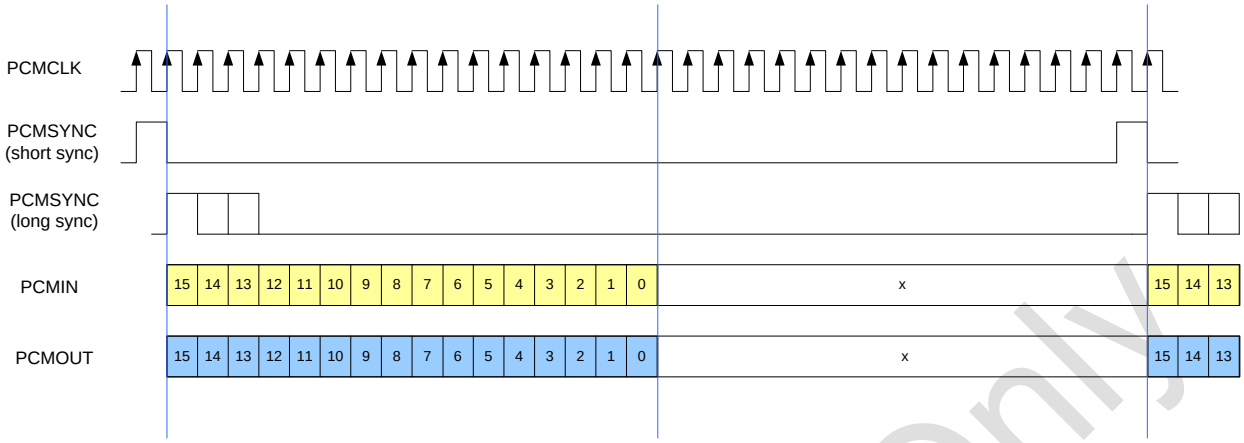

Figure 12 PCM format: 16b Example

Example: 8b a-law/u-law, 256KHz PCM clock, 8k sync

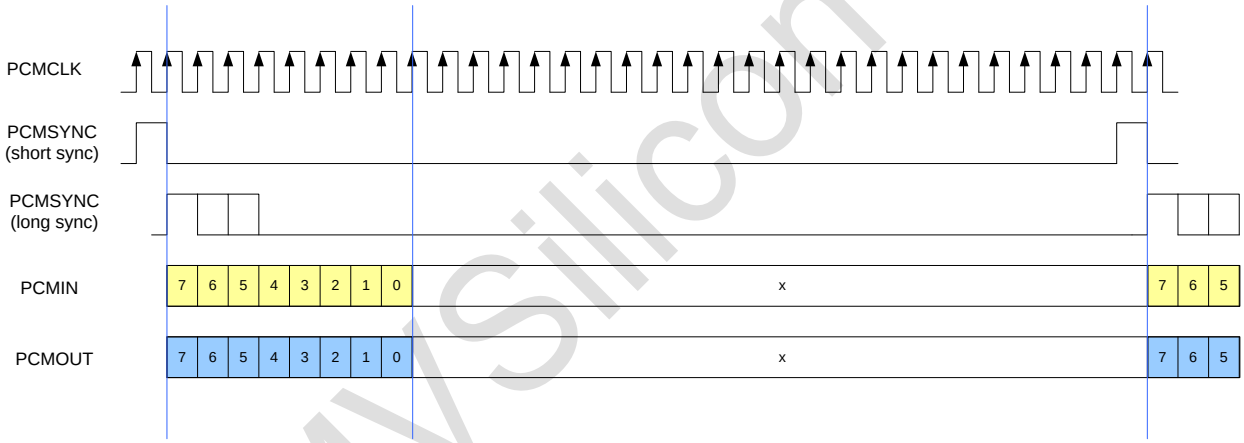

Figure 13 PCM format: 8b Example

5.2.2 Detailed Interface Descriptions

5.2.2.1 PCM Master/Slave Mode

When acting as a PCM Slave, both PCM and PCM clock signals are generated by the external PCM master. When acting as a PCM Master, both PCM sync and PCM clock are generated by MT6622.

For MVSilicon Only

This document contains information that is proprietary to MediaTek Inc.

Unauthorized reproduction or disclosure of this information in whole or in part is strictly prohibited.

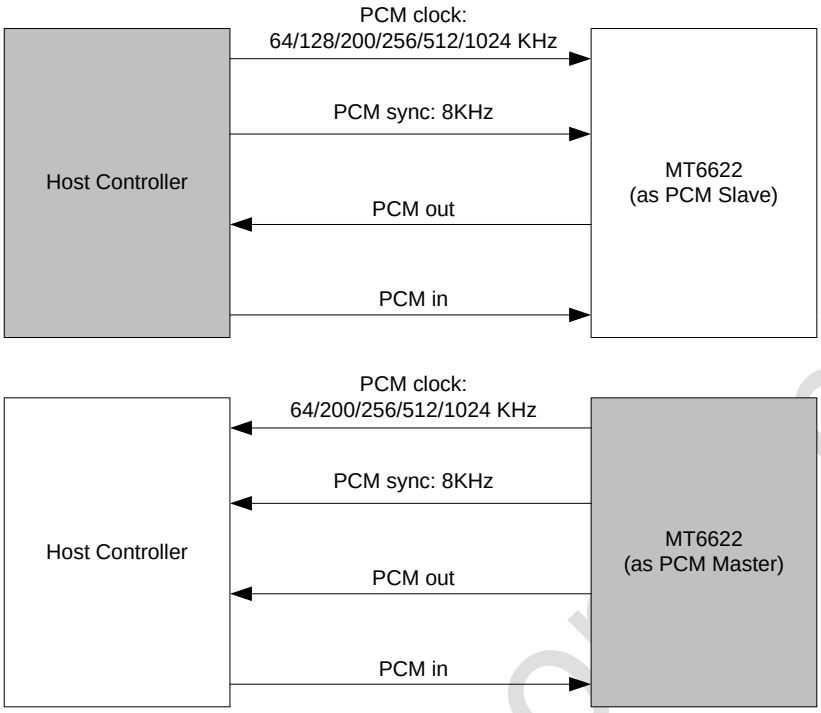

Figure 14 PCM Master/Slave Modes

5.2.2.2 Sign Extension

Sign extension is only meaningful when the linear PCM length is less than 16bits, and it only applies to MSB first data formats.

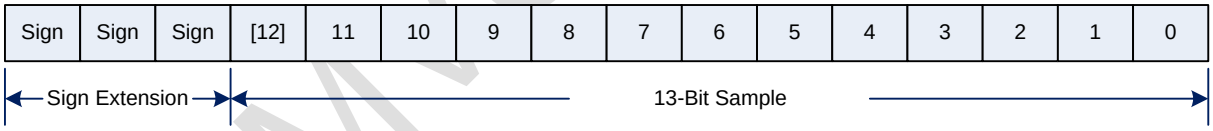

Figure 15 PCM format: Sign Extension

5.2.2.3 Zero Padding

Zero padding is only meaningful when the linear PCM length is less than 16bits, and it only applies to LSB first data formats.

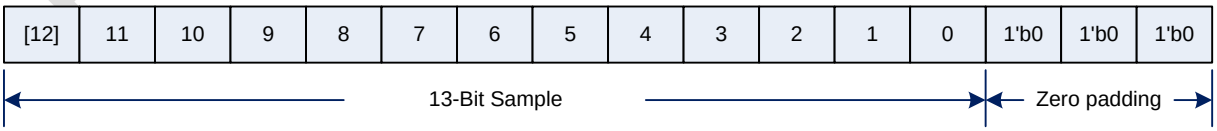

Figure 16 PCM format: Zero Padding

For MVSilicon only

This document contains information that is proprietary to MediaTek Inc.

Unauthorized reproduction or disclosure of this information in whole or in part is strictly prohibited.

5.2.3 PCM timing information

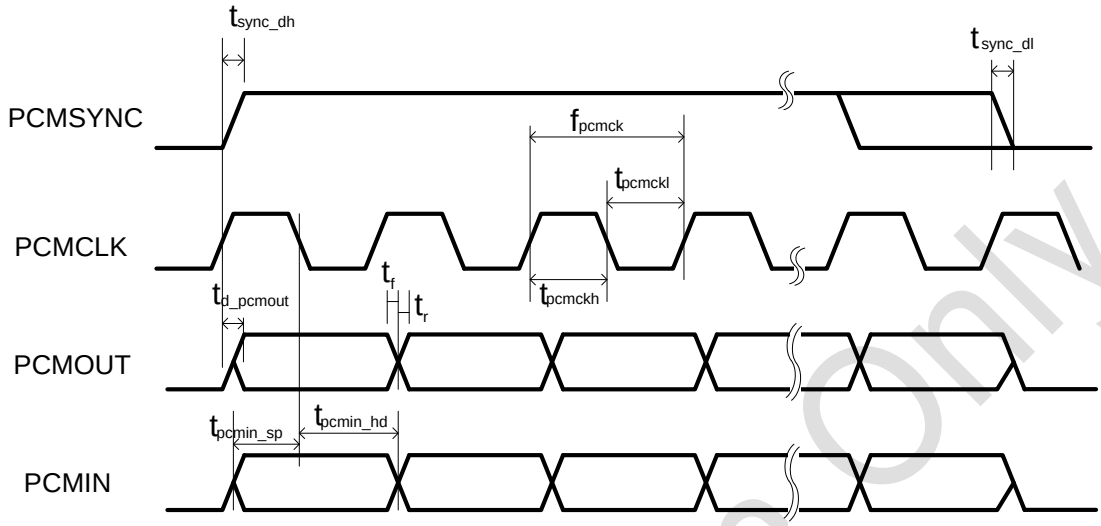

Figure 17 PCM timing: master mode with long sync

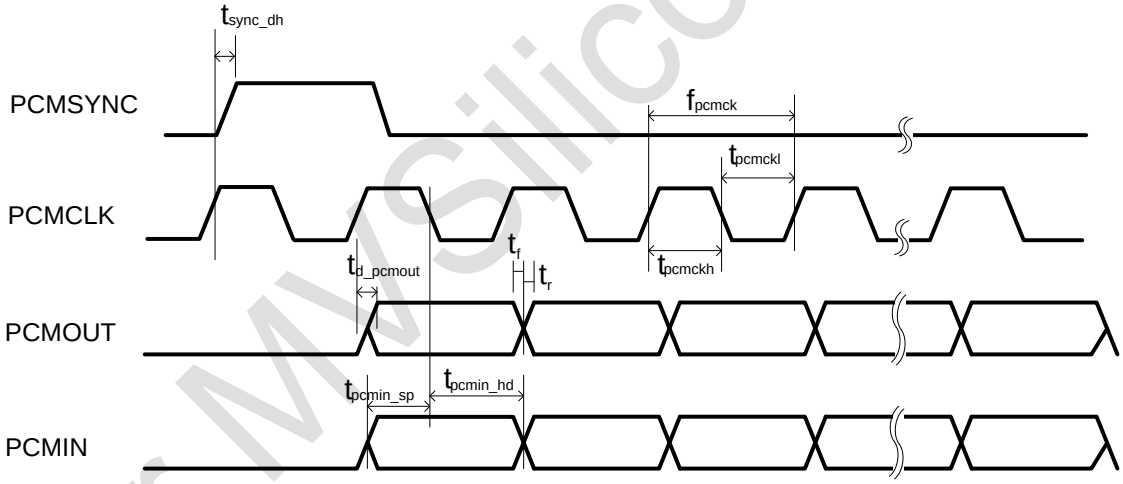

Figure 18 PCM timing: master mode with short sync

Symbol	Parameter	Min	Typ	Max	Unit
fpcmck	PCM clock frequency		-[1]		KHz
tpcmckh	PCM clock high duration	-	500/ fpcmck	-	ns
tpcmckl	PCM clock low duration	-	500/ fpcmck	-	ns
tsync_dh	Delay time from PCM_CLK high to PCM_SYNC high	50	-	150	ns
tsync_dl	Delay time from PCM_CLK low to PCM_SYNC low (Long Frame Sync only)	50	-	150	ns

For MVSilicon Only

This document contains information that is proprietary to MediaTek Inc.

Unauthorized reproduction or disclosure of this information in whole or in part is strictly prohibited.

td_pcmout	PCM_OUT delay time from PCM_CLK low	-	-	20	ns
tf	PCM _OUT falling time from high to low	-	-	5	ns
tr	PCM _OUT rising time from low to high	-	-	5	ns
tpcmin_sp	Setup time for PCM_IN valid to PCM_CLK low	50	-	-	ns
tpcmin_hp	Hold time for PCM_CLK low to PCM_IN invalid	50	-	-	ns

Note 1: Refer to Table 14 for a detail list of clock rate.

Table 16 PCM timing: master mode

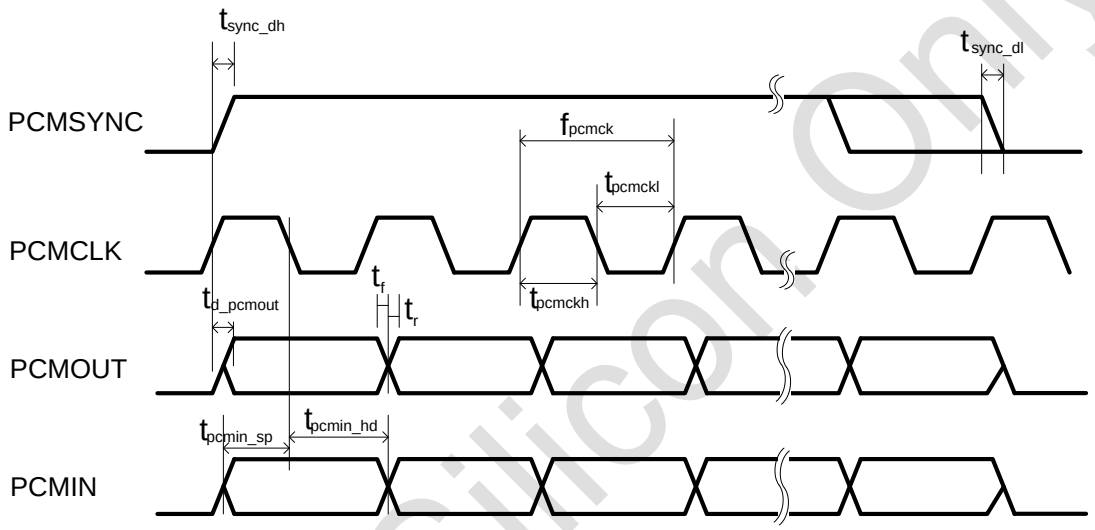

Figure 19 PCM timing: slave mode with long sync

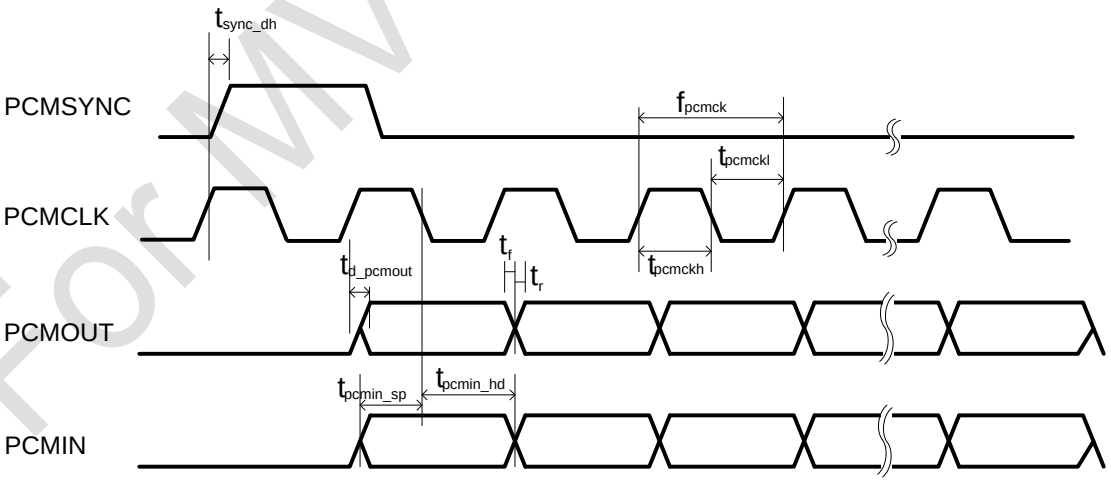

Figure 20 PCM timing: slave mode with short sync

Symbol	Parameter	Min	Typ	Max	Unit
fpcmck	PCM clock frequency (slave: input)	64	-	2400	kHz

For MVSilicon Only

This document contains information that is proprietary to MediaTek Inc.

Unauthorized reproduction or disclosure of this information in whole or in part is strictly prohibited.

tpcmckh	PCM clock high duration	200	-	-	us
tpcmckl	PCM clock low duration	200	-	-	us
tsync_dh	Delay time from PCM_CLK high to PCM_SYNC high	0	-	-	ns
tsync_dl	Delay time from PCM_CLK low to PCM_SYNC low (Long Frame Sync only)	-	-	50	ns
td_pcmout	PCM_OUT delay time from PCM_CLK low	50	-	150	ns
tf	PCM _OUT falling time from high to low with 10pf output load.	-	-	5	ns
tr	PCM _OUT rising time from low to high with 10pf output load.	-	-	5	ns
tpcmin_sp	Setup time for PCM_IN valid to PCM_CLK low	50	-	-	ns
tpcmin_hp	Hold time for PCM_CLK low to PCM_IN invalid	50	-	-	ns

Table 17 PCM timing: slave mode

5.3 Wireless LAN Co-existence Interface

MT6622 supports the Packet Traffic Arbitration (PTA) interface that allows the Bluetooth system to coexist with another Wireless LAN system on the same PCB. This interface is defined by IEEE 802.15.2 as one of the methods for Wireless LAN co-existence. With the PTA features enabled, arbitration is performed in order to prevent collision of the Bluetooth and WLAN signals. The diagram below illustrates this interface connection.

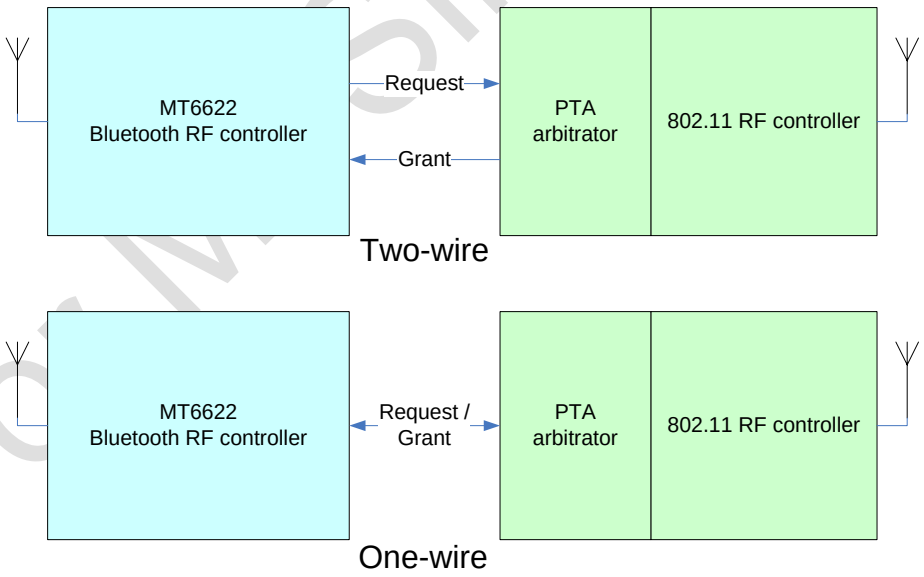

Figure 21 PTA Interface

The interface signal in the diagram above maps to the pad names as follows:

Signal	GPIO	Direction	Description

For MP Silicon Only

This document contains information that is proprietary to MediaTek Inc.

Unauthorized reproduction or disclosure of this information in whole or in part is strictly prohibited.

BT2WIFI	GPIO4	Two wire: Output One wire: Inout	Request from Bluetooth to other 2.4GHz radio
WIFI2BT	GPIO5	Input	Grant from other 2.4GHz radio to Bluetooth

Table 18 PTA Interface Pad Name

For the widest range of compatibility, MT6622's PTA interface supports 5 types of operating modes. Mode 1/2/3/4 selections are governed by the request pin configuration behavior. In addition, a proprietary 1-wire interface mode is also supported for minimum pin requirement.

5.4 Specification of External Reference Clock

If MT6622 clock input path is from external clock, the specification of external reference clock should be as below.

Chip part number	MT6612	MT6616	MT6622	MT6626
Loading (on)	75k//9.8pF	75k//9.8pF	75k//3.5pF	75k//3.5pF
Loading (off)	75k//8.1pF	75k//8.1pF	75k//3.5pF	75k//3.5pF
Swing	1.5V~300mV	1.5V~300mV	1.5V~300mV	1.5V~300mV
Waveform	Analog Signal/Square Wave	Analog Signal/Square Wave	Analog Signal/Square Wave	Analog Signal/Square Wave
PN requirement 1Hz	--	--	--	--
PN requirement 10Hz	--	--	--	--
PN requirement 100Hz	--	--	--	--
PN requirement 1kHz	-128dBc/Hz	-128dBc/Hz	-128dBc/Hz	-128dBc/Hz
PN requirement 10kHz	-140dBc/Hz	-140dBc/Hz	-140dBc/Hz	-140dBc/Hz
PN requirement 100kHz	-147dBc/Hz	-147dBc/Hz	-147dBc/Hz	-147dBc/Hz
Internal AC couple? (to check if external cap needed)	No (need ext AC couple cap)	No	No	No

For Only

This document contains information that is proprietary to MediaTek Inc.

Unauthorized reproduction or disclosure of this information in whole or in part is strictly prohibited.

Table 19 Specification of External Reference Clock

5.5 LDO28EN/SYSRST__B/SRCLKENA Timing Information

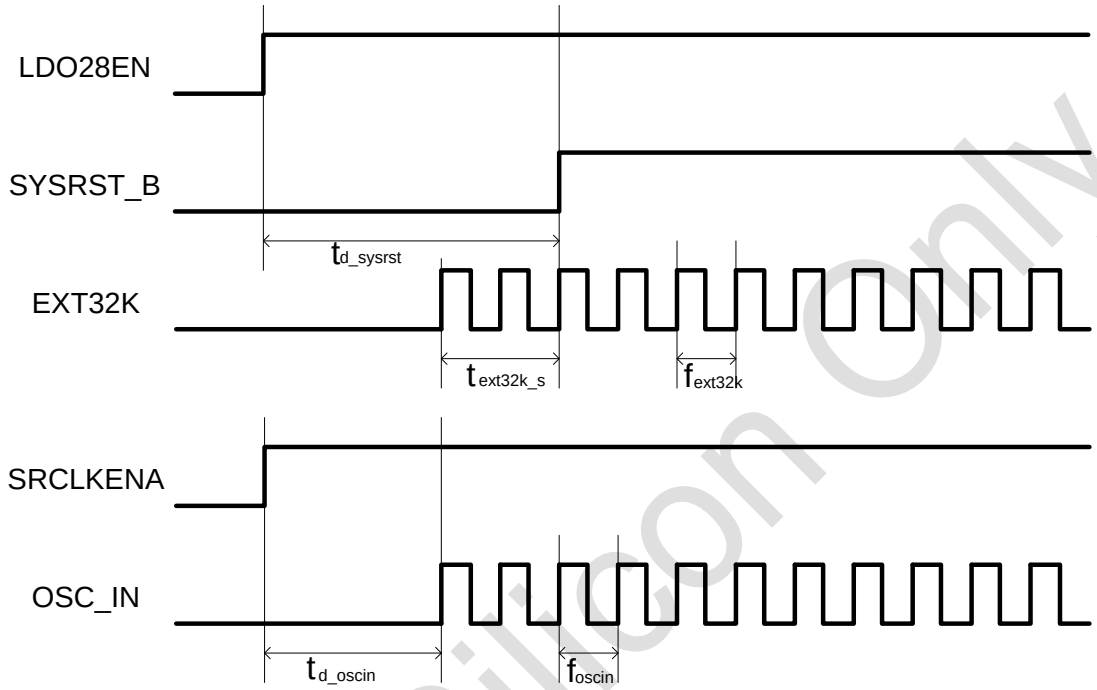

Figure 22 LDO28EN/SYSRST_B/SRCLKENA timing

Symbol	Parameter	Min	Typ	Max	Unit
fext32k	EXT32K frequency	31	32.768	34	KHz
td_sysrst	Delay time form LDO28EN high to SYSRST_B high	10	-	-	ms
text32k_s	Setup time for EXT32K	1	-	-	ms
foscin	OSC_IN frequency		*1		MHz
td_oscin	OSC_IN delay time from SRCLKENA high	*2			ms

Table 20 Specification of LDO28EN/SYSRST_B/SRCLKENA signals

*1 : Typical frequency can be 13, 16, 19.2, 26 or 32MHz. Please refer to section 4.2 clock generation.
*2 : This value depends on the clock stable time of OSC_IN. For example, MT6252 OSC clock stable time is 2ms. AD6548 OSC clock stable is 5ms.

For MT6622 Silicon Only

This document contains information that is proprietary to MediaTek Inc.

Unauthorized reproduction or disclosure of this information in whole or in part is strictly prohibited.

6 Bluetooth radio characteristics

Tests are performed under the normal conditions defined in Bluetooth test specification with external band pass filter. Typical specifications are with default register settings and under recommended operating conditions. Min/Max specifications are for extreme operating voltage and temperature conditions, unless otherwise stated.

6.1 Basic rate

6.1.1 Receiver specifications

Parameter	Description	Min	Typ	Max	Unit
Frequency range		2402	-	2480	MHz
Receiver sensitivity[1]	BER<0.1%	-	-95	-	dBm
Maximum usable signal	BER<0.1%	-	0	-	dBm
C/I co-channel (BER<0.1%)	Co channel selectivity	-	6	11	dB
C/I 1MHz (BER<0.1%)	Adjacent channel selectivity	-	-9	0	dB
C/I 2MHz (BER<0.1%)	2nd adjacent channel selectivity	-	-40	-30	dB
C/I≥3MHz (BER<0.1%)	3rd adjacent channel selectivity	-	-45	-40	dB
C/I Image channel (BER<0.1%)	Image channel selectivity	-	-20	-9	dB
C/I Image 1MHz (BER<0.1%)	1MHz adjacent to image channel selectivity	-	-43	-20	dB
Out-of-band blocking	30MHz to 2000MHz	-10	-3		dBm
	2000MHz to 2399MHz	-27	-9	-	dBm
	2498MHz to 3000MHz	-27	-8	-	dBm
	3000MHz to 12.75GHz	-10	-1	-	dBm
Intermodulation	Max interference level to maintain 0.1% BER, interference signals at 3MHz and 6MHz offset.	-39	-33	-	dBm

Note 1: The receiver sensitivity is measured on the chip input interface.

Table 21 Basic rate receiver specifications

6.1.2 Transmitter specifications

Parameter	Description	Min	Typ.	Max	Unit
Frequency range		2402	-	2480	MHz

For MySilicon Only

This document contains information that is proprietary to MediaTek Inc.

Unauthorized reproduction or disclosure of this information in whole or in part is strictly prohibited.

Output power[1]	At maximum power output level	6	10	12	dBm
Gain step		2	4	8	dB
Modulation characteristics	Δf1avg	140	157	175	KHz
	Δf2max (For at least 99.9% of all Δf2max)	115	130	-	KHz
	Δf1avg /Δf2avg	0.8	0.98	-	KHz
ICFT	Initial carrier frequency tolerance	-75	+5	+75	KHz
Carrier frequency drift	One slot packet (DH1)	-25	+13	+25	KHz
	Two slot packet (DH3)	-40	+15	+40	KHz
	Five slot packet (DH5)	-40	+15	+40	KHz
	Max drift rate	-	7	20	KHz/50μs
TX output spectrum	20dB bandwidth	-	920	1000	KHz
In-Band spurious emission	±2MHz offset	-	-40	-20	dBm
	±3MHz offset	-	-48	-40	dBm
	>±3MHz offset	-	-48	-40	dBm
Output-of-Band spurious emission	30MHz to 1GHz, operating mode	-	-76	-	dBm
	1GHz to 12.75GHz, operating mode	-	-52	-	dBm
	1.8GHz to 1.9GHz	-	-80	-	dBm
	5.15GHz to 5.3GHz	-	-78	-	dBm

Note 1: The output power is measured on the chip output interface.

Table 22 Basic rate transmitter specifications

6.2 Enhanced data rate

6.2.1 Receiver specifications

Parameter	Modulation	Min	Typ.	Max	Unit
Receiver sensitivity (BER<0.01%)[1]	π/4 DQPSK	-	-96	-	dBm
	8PSK	-	-89	-	dBm
Maximum usable signal (BER<0.1%)	π/4 DQPSK	-	0	-	dBm
	8PSK	-	0	-	dBm
C/I co-channel (BER<0.1%)	π/4 DQPSK	-	9	13	dB
	8PSK	-	16	21	dB
C/I 1MHz (BER<0.1%)	π/4 DQPSK	-	-12	0	dB
	8PSK	-	-5	5	dB
C/I 2MHz (BER<0.1%)	π/4 DQPSK	-	-48	-30	dB
	8PSK	-	-42	-33	dB
C/I≥3MHz (BER<0.1%)	π/4 DQPSK	-	-51	-40	dB

For MVSilicon Only

This document contains information that is proprietary to MediaTek Inc.

Unauthorized reproduction or disclosure of this information in whole or in part is strictly prohibited.

	8PSK	-	-44	-33	dB
C/I Image channel (BER<0.1%)	π/4 DQPSK	-	-24	-7	dB
	8PSK	-	-18	0	dB
C/I Image 1MHz (BER<0.1%)	π/4 DQPSK	-	-51	-20	dB
	8PSK	-	-44	-13	dB

Note 1: The receiver sensitivity is measured on the chip input interface.

Table 23 Enhanced data rate receiver specifications

6.2.2 Transmitter specifications

Parameter	Description and modulation		Min	Typ.	Max	Unit
Frequency range			2402	-	2480	MHz
Maximum transmit power[1]	π/4 DQPSK		4	7.5	9	dBm
	8PSK		4	7.5	9	dBm
Relative transmit power	π/4 DQPSK		-	-1.7	-	dB
	8PSK		-	-1.7	-	dB
Frequency stability	maximum carrier frequency stability, ωo	π/4 DQPSK	-10	4	10	KHz
		8PSK	-10	4	10	KHz
	maximum carrier frequency stability, ωi	π/4 DQPSK	-75	10	75	KHz
		8PSK	-75	10	75	KHz
	maximum carrier frequency stability, |ωo + ωi|	π/4 DQPSK	-75	10	75	KHz
		8PSK	-75	10	75	KHz
Modulation accuracy	RMS DEVM	π/4 DQPSK	-	5	30	%
		8PSK	-	5	20	%
	99% DEVM	π/4 DQPSK	-	9	-	%
		8PSK	-	9	-	%
	Peak DEVM	π/4 DQPSK	-	15	35	%
		8PSK	-	15	25	%
In-Band spurious emission	±1MHz offset	π/4 DQPSK	-	-33	-26	dB
	±1MHz offset	8PSK	-	-33	-26	dB
	±2MHz offset	π/4 DQPSK	-	-30	-20	dBm
	±2MHz offset	8PSK	-	-30	-20	dBm
	±3MHz offset	π/4 DQPSK	-	-42	-40	dBm
	±3MHz offset	8PSK	-	-42	-40	dBm

Note 1: The output power is measured on the chip output interface.

Table 24 Enhanced data rate transmitter specifications

For MVSilicon Only

This document contains information that is proprietary to MediaTek Inc.

Unauthorized reproduction or disclosure of this information in whole or in part is strictly prohibited.

7 Terminology

π/4 DQPSK	π/4 Differential Quadrature Phase Shift keying
8PSK	8 Phase Shift Keying
AFH	Adaptive Frequency Hopping
AGC	Automatic Gain Control
LDO	Low Drop-Out
LNA	Low Noise Amplifier
LO	Local Oscillator
LPO	Low Power Oscillator
LSB	Least Significant Bit
MCU	Micro-Controller Unit
MSB	Most Significant Bit
PCM	Pulse Code Modulation
PLL	Phase Locked Loop
PTA	Packet Traffic Arbitration
RAM	Random Access Memory
ROM	Read Only Memory
VCO	Voltage Control Oscillator
WLCSP	Wafer-Level Chip-Scale Packaging

For MVSilicon Only

This document contains information that is proprietary to MediaTek Inc.

Unauthorized reproduction or disclosure of this information in whole or in part is strictly prohibited.