ESTECH Co., Ltd. 3rd Fl., Chungdam Bldg., 119-1 Chungdam-dong, Kangnamgu, Seoul	MIC KOLAS VCI FC	Electromagnetic Interference Test Report

Compliance Test Report for FCC

Report Number		ESTF150401-001			
Applicant	Company name	Huwell Technology Inc.			
	Address	82-21 Nonhyeon-dong Gangnam-gu Seoul Korea			
	Telephone	82-2-525-9577			
Product	Product name	Digital IP Set-top Box			
	Model No.	TERABEE		Manufacturer	Huwell Technology Inc.
	Serial No.	NONE		Country of origin	Korea
Test date	2004-01-27 ~ 2004-01-27			Date of issue	2004-01-27
Testing location	ESTECH. Co., Ltd. 97-1 Hoiuk-Ri Majang-Myon, Icheon-city, KyungKi-Do, Korea				
Standard	FCC PART 15 2002 , ANSI C 63.4 2001				
Test item	■ Conducted Emission	☐ Class A	■ Class B	Test result	OK
	■ Radiated Emission	☐ Class A	■ Class B	Test result	OK
Measurement facility registration number		94696			
Tested by	Senior Engineer J.M. Yang		(Signature)		
Reviewed by	Director T.K. Lee		(Signature)		
Abbreviation	OK, Pass = Passed, Fail = Failed, N/A = not applicable				

* Note

- This is certified that the above mentioned producs have been tested for the sample provided by client
- No part of this document may be duplicated or reproduced by any means without the express written permission of the Estech Co., Ltd.

Contents

1. Laboratory Information ····· 3
2. Description of EUT ····· 4
3. Test Standards ····· 5
4. Measurement condition ····· 6
5. Measurement of radiated emission ····· 8
   5.1 Measurement equipment ····· 8
   5.2 Environmental conditions ····· 8
   5.3 Test data ····· 9
6. Measurement of conducted emission ····· 10
   6.1 Measurement equipment ····· 10
   6.2 Environmental conditions ····· 10
   6.3 Test data ····· 11
7. Photographs of test setup ····· 12~13
8. Photographs of EUT ····· 14

Appendix 1. Spectral diagram

Appendix 2. Phorographs of EUT in side PCB

Appendix 3. Block diagram of EUT

Appendix 4. Circuit Diagram

1. Laboratory Information

1.1 General

This EUT (Equipment Under Test) has been shown to be capable of compliance with the applicable technical standards and is tested in accordance with the measurement procedures as indicated in this report.
ESTECH attests to accuracy of test data. All measurement reported herein were performed by ESTECH Co., Ltd.
ESTECH assume full responsibility for the completeness of these measurements and vouch for the qualifications of all persons taking them.

1.2 Test Lab.

Corporation Name : ESTECH Co. Ltd

Head Office : 3 rd Fl., Chungdam Bldg., 119-1 Chungdam-dong Kangnam-gu , Seoul, Korea
(Safety & Telecom. Test Lab)

EMC Test Lab : 58-1 Osan-Ri, GaNam-Myon, YeoJoo-Gun, KyungKi-Do, Korea
97-1 Hoiuk-Ri Majang-Myon, Icheon-city, KyungKi-Do, Korea

1.3 Official Qualification(s)

FCC : Filed Laboratory at Federal Communications Commission

2. Description of EUT

2.1 Summary of Equipment Under Test

Product	: Digital IP Set-top Box
Model Number	: TERABEE
Serial Number	: NONE
Manufacturer	: Huwell Technology Inc.
Country of origin	: Korea
Rating	: 120V, 60Hz , Max 30W
Receipt Date	: 2003-12-26

2.2 General descriptions of EUT

- RF Modulator Freqency:101~847Mhz
- RF Modulator Output Channel:Channe 2~Channe 69
- Receving Syestem :NTSC M
- Syestem Resource(Processor):32Bit Processor(266Mhz)
- Syestem Resource(SRAM):128MB
- Syestem Resource(Flash):32MB
- Syestem Resource(EEPROM):256KB
- Video Decoder Type :MPEG2
- Video Decoder Video Format:NTSC
- Video Decoder Resolution:720*576,720*480
- MPEG Audio TYpe:Stereo

3. Test Standards

Test Standard : FCC PART 15 (2002)

This Standard sets out the regulations under which an intentional, unintentional, or incidental radiator may be operated without an individual license. It also contains the technical specifications, administrative requirements and other conditions relating to the marketing of Part 15 devices.

Test Method : ANSI C 63.4 (2001)

This standard sets forth uniform methods of measurement of radio-frequency (RF) signals and noise emitted from both unintentional and intentional emitters of RF energy in the frequency range 9 kHz to 40 GHz. Methods for the measurement of radiated and AC power-line conducted radio noise are covered and may be applied to any such equipment unless otherwise specified by individual equipment requirements. These methods cover measurement of certain decides that deliberately radiate energy, such as intentional emitters, but does not cover licensed transmitters. This standard is not intended for certification/approval of avionic equipment or for industrial, scientific, and medical (ISM) equipment These method apply to the measurement of individual units or systems comprised of multiple units

4. Measurement Condition

4.1 EUT Operation.

* The EUT was in the following operation mode during all testing
* The operational conditions of the EUT was determined by the manufacturer according to the typical use of the EUT with respect to the expected hightest level of emission

- Place the EUT as following diagram
- Sending the color bar from TV Signal Generator to EUT.
- EUT display the color bar to the LCD monitor
- Connect one of Ethernet cable from PC/Internet to EUT and receiving real time data from internet.

4.2 Configuration and Peripherals

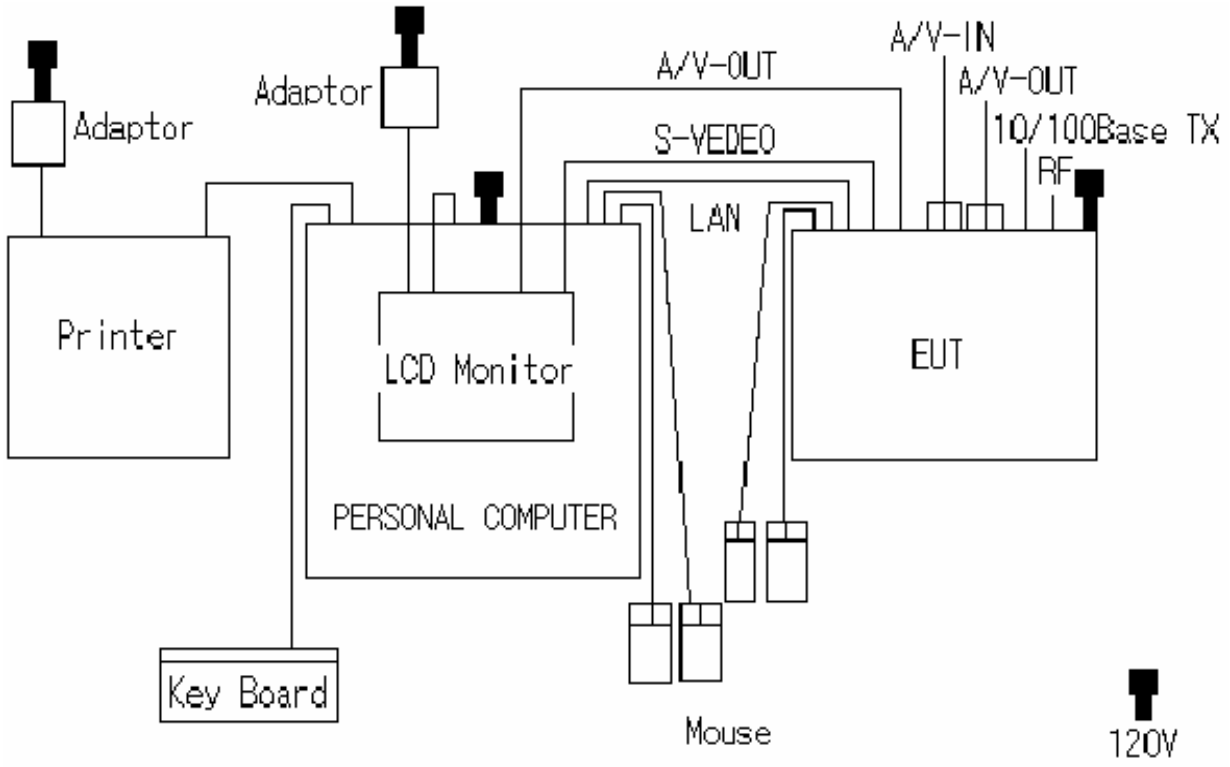

4.3 EUT and Support equipment

Equipment Name	Model Name	S/N	Manufacturer	Remark (FCC ID)
Digital IP Set-top Box	TERABEE	NONE	Huwell Technology Inc.	EUT
LCD MONITOR	2000FP-005	NONE	DELL Computer Corp.	-
ADAPTER	ADP-70EB	TH-09364H-17971 -18E-00VX	PATENTS PENDING LPS	-
KEY BOARD	SEM-DT35	32006557	SamsungElectro Mechanics Co,.Ltd	-
MOUSE	M-S48a	HCA11804896	Logitech	-
MOUSE	M-BJ58	LNA21702606	Logitech	-
MOUSE	MSW-5	NONE	A4TECH	
MOUSE	M-BE58	LZE11103398	Logitech	
PRINTER	C6414J	TH18M149P2	HP	
ADAPTER	C6409-60152	C1H14B	YOKOGAWA	
PERSONAL COMPUTER	Optiplex GX270	NONE	DELL Computer Corp.	

4.4 Cable Connecting

Start Equipment		End Equipment		Cable Standard		Remark
Name	I/O port	Name	I/O port	Length	Shielded	
Digital IP Set-top Box	S-Video	LCD MONITOR	S-Video	2	Y	-
Digital IP Set-top Box	A/V-OUT	LCD MONITOR	A/V-IN	2	Y	-
Digital IP Set-top Box	INTERNET OUT	PERSONAL COMPUTER	10/100BaseTX	2	N	-
Digital IP Set-top Box	INTERNET IN	HUB	10/100BaseTX	25	N	-
Digital IP Set-top Box	A/V-OUT	-	-	2	N	-
Digital IP Set-top Box	A/V-IN	-	-	2	N	-
Digital IP Set-top Box	RF	ETHERNAL TV SIGNAL GENERATOR	RF	2	Y	-
Digital IP Set-top Box	USB	MOUSE	USB	2	N	-
Digital IP Set-top Box	USB	MOUSE	USB	2	N	-
PERSONAL COMPUTER	SERIAL	MOUSE	SERIAL	2	N	-
PERSONAL COMPUTER	PS/2MOUSE	MOUSE	PS/2MOUSE	2	N	-
PERSONAL COMPUTER	PS/2KEYBOARD	KEY BOARD	PS/2KEYBOARD	2	N	
PERSONAL COMPUTER	VIDEO	MONITOR	VIDEO	2	Y	-
PERSONAL COMPUTER	PARALLEL	PRINTER	PARALLEL	2	Y	-
PRINTER	DC Power	ADAPTER	-	2	Y	-
LCD MONITOR	DC Power	ADAPTER	-	2	Y	-

5. Measurement of radiated disturbance

Above 30 MHz Electric Field strength was measured in accordance with FCC Part 15 (2002) & ANSI C 63.4 (2001). The test setup was made according to FCC Part 15 (2002) & ANSI C 63.4 (2001) on an open test site, which allows a 3m distance measurement. The EUT was placed in the center of wooden turntable. The height of this table was 0.8m. The measurement was conducted with both horizontal and vertical antenna polarization. The turntable has fully rotated. For further description of the configuration refer to the picture of the test set-up.

5.1 Measurement equipments

Equipment Name	Type	Manufacturer	Serial No.	Next Calibration date
Receiver	ESPC	Rohde & Schwarz	845296/021	2003.6.21
Spectrum Analyzer	R3261B	ADVANTEST	1720302	2004.2.7
LogBicon Antenna	VULB 9160	S/B	3107	2003.6.7
Turn Table	2087	EMCO	2129	-
Antenna Mast	2070-01	EMCO	9702-203	-
ANT Mast Controller	2090	EMCO	1535	-
Turn Table Controller	2090	EMCO	1535	-

5.2 Environmental Condition

Test Place : Open site(3m)

Temperature (°C) : 7 ℃

Humidity (%) : 52 %

5.3 Test data

Measurement Distance : 3 m

Frequency (MHz)	Reading (dBμV)	Position (V/H)	Height (m)	Correction Factor		Result Value		
				Ant Factor (dB)	Cable (dB)	Limit (dBμV/m)	Result (dBμV/m)	Margin (dBμV/m)
30.99	17.80	V	1.0	12.27	0.9	40.0	30.96	-9.04
43.76	18.40	V	1.0	12.74	1.0	40.0	32.14	-7.86
55.66	13.40	V	1.0	12.44	1.1	40.0	26.94	-13.06
77.41	18.40	V	1.0	9.34	1.3	40.0	29.04	-10.96
80.99	17.90	V	1.0	8.75	1.3	40.0	27.99	-12.01
135.02	14.20	H	2.7	13.00	1.8	43.5	28.97	-14.53
147.46	19.80	H	2.0	13.76	1.9	43.5	35.44	-8.06
177.76	24.80	H	1.8	12.64	2.1	43.5	39.49	-4.01
218.36	18.30	H	1.3	10.73	2.3	43.5	31.32	-12.18
250.00	19.50	H	1.1	11.92	2.4	46.0	33.79	-12.21
266.65	17.30	H	1.1	12.36	2.5	46.0	32.14	-13.86
388.87	22.00	H	1.0	15.08	3.1	46.0	40.17	-5.83
477.78	17.80	H	1.0	16.85	3.5	46.0	38.12	-7.88
566.69	18.40	H	1.4	18.32	3.8	46.0	40.50	-5.50
650.00	16.80	V	1.0	19.63	4.1	46.0	40.53	-5.48
655.53	18.00	V	1.0	19.69	4.1	46.0	41.82	-4.18
744.42	16.50	V	1.0	21.09	4.4	46.0	41.98	-4.02
768.01	13.60	V	1.0	21.48	4.5	46.0	39.59	-6.41
777.76	15.30	V	1.0	21.59	4.6	46.0	41.47	-4.53
816.02	10.20	V	1.0	21.87	4.7	46.0	36.80	-9.20
955.61	13.10	V	TV SIGNAL G	23.42	5.1	46.0	41.58	-4.42
1250.00	4.50	H	1.0	25.87	5.7	54.0	36.07	-17.93
1500.00	-10.10	H	1.0	28.14	6.4	54.0	24.44	-29.56
1874.99	-8.20	V	1.0	31.85	7.5	54.0	31.20	-22.80
Remark	H : Horizontal, V : Vertical							

6. Measurement of conducted disturbance

The continuous disturbance voltage of AC Mains in the frequency from 0.15 to 30 MHz was measured in accordance to FCC Part 15 (2002) & ANSI C 63.4 (2001) The test setup was made according to FCC Part 15 (2002) & ANSI C 63.4 (2001) in a shielded. The EUT was placed on a non-conductive table at least 80 above the ground plan. A grounded vertical reference plane was positioned in a distance of 40cm from the EUT. The distance from the EUT to other metal surfaces was at least 0.8m. The EUT was only earthen by its power cord through the line impedance stabilizing network. The power cord has been bundled to a length of 1.0m.. The test receiver with Quasi Peak detector complies with CISPR 16.

6.1 Measurement equipments

Equipment Name	Type	Manufacturer	Serial No.	Next Calibration date
LISN	ESH3-Z5	Rohde & Schwarz	838979/010	2004. 2. 7
LISN	NNLA8120A	Schwarzbeck	NONE	2004. 2. 7
TEST Receive	ESPC	Rohde & Schwarz	845296/021	2003.6.21
Pulse Limiter	ESH3Z2	Rohde & Schwarz	NONE	2003.7.4

6.2 Environmental Condition

Test Place : Shield Room

Temperature (°C) : 21 ℃

Humidity (%) : 44 %

6.3 Test data

Frequency (MHz)	Correction Factor		Line (H/N)						
	Lisn (dB)	Cable (dB)		Limit (dBμV)	Reading (dBμV)	Result (dBμV)	Limit (dBμV)	Reading (dBμV)	Result (dBμV)
0.152	0.07	0.0	H	65.87	31.79	31.86	55.87	40.03	40.10
0.156	0.07	0.0	N	65.67	31.46	31.53	55.67		
0.200	0.07	0.0	N	63.62	47.90	48.00	53.62		
0.300	0.07	0.1	H	60.24	46.27	46.44	50.24	45.53	45.70
0.400	0.07	0.1	H	57.86	43.80	44.02	47.86		
0.500	0.07	0.2	H	56.01	36.36	36.63	46.01		
0.600	0.08	0.2	H	56.00	35.89	36.17	46.00		
0.698	0.08	0.2	N	56.00	32.39	32.67	46.00		
0.799	0.09	0.2	H	56.00	34.47	34.76	46.00		
0.901	0.09	0.2	H	56.00	35.69	35.98	46.00		
1.100	0.09	0.2	H	56.00	30.47	30.77	46.00		
1.704	0.10	0.3	H	56.00	30.39	30.76	46.00		
8.125	0.31	0.5	H	60.00	29.01	29.79	50.00		
12.198	0.47	0.7	H	60.00	41.88	43.04	50.00		
13.422	0.53	0.7	H	60.00	39.95	41.22	50.00		
20.805	0.72	0.8	N	60.00	33.34	34.88	50.00		
21.478	0.74	0.8	H	60.00	38.46	40.03	50.00		
24.594	0.81	0.9	H	60.00	37.87	39.57	50.00		
Remark	H : Hot Line, N : Neutral Line								

7. Photographs of test setup

7.1 Setup for Radiated Test : 30~2000MHz

[Front]

[Rear]

7.2 Setup for Conducted Test : 0.15~30MHz

[Front]

[Rear]

8. Photographs of EUT

[Front]

[Rear]

Appendix 1. Spectral diagram

*HOT

27 Jan 2004 13:18

ESTECH
HOT

EUT:	TERABEE
Manuf:	Huwell Technology Inc.
Op Cond:	110V
Operator:	Senior Engineer J.M. Yang
Test Spec:	CLASS B
Comment:	

File: f01001_h.dat : Huwell Technology Inc.

Scan Settings (1 Range)

Frequencies			Receiver Settings				
Start	Stop	Step	IF BW	Detector	M-Time	Atten	OpRge
150kHz	30MHz	0.8%	10kHz	PK+AV	20msec	Auto	60dB

Final Measurement: X QP / + AV
Meas Time: 1sec
Subranges: 25
Acc Margin: 60 dB

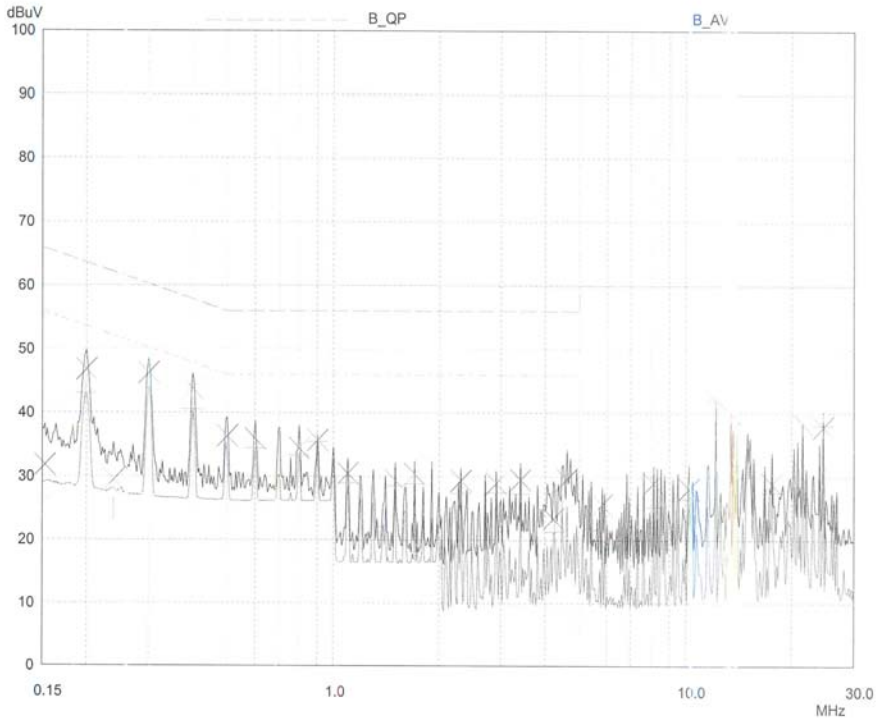

*NETRUL

27 Jan 2004 13:10

ESTECH
NEUTRAL

EUT:	TERABEE
Manuf:	Huwell Technology Inc.
Op Cond:	110V
Operator:	Senior Engineer J.M. Yang
Test Spec:	CLASS B
Comment:	

File: f01001_n.dat : Huwell Technology Inc.

Scan Settings (1 Range)

Frequencies			Receiver Settings				
Start	Stop	Step	IF BW	Detector	M-Time	Atten	OpRge
150kHz	30MHz	0.8%	10kHz	PK+AV	20msec	Auto	60dB

Final Measurement: X QP / + AV
Meas Time: 1sec
Subranges: 25
Acc Margin: 60 dB

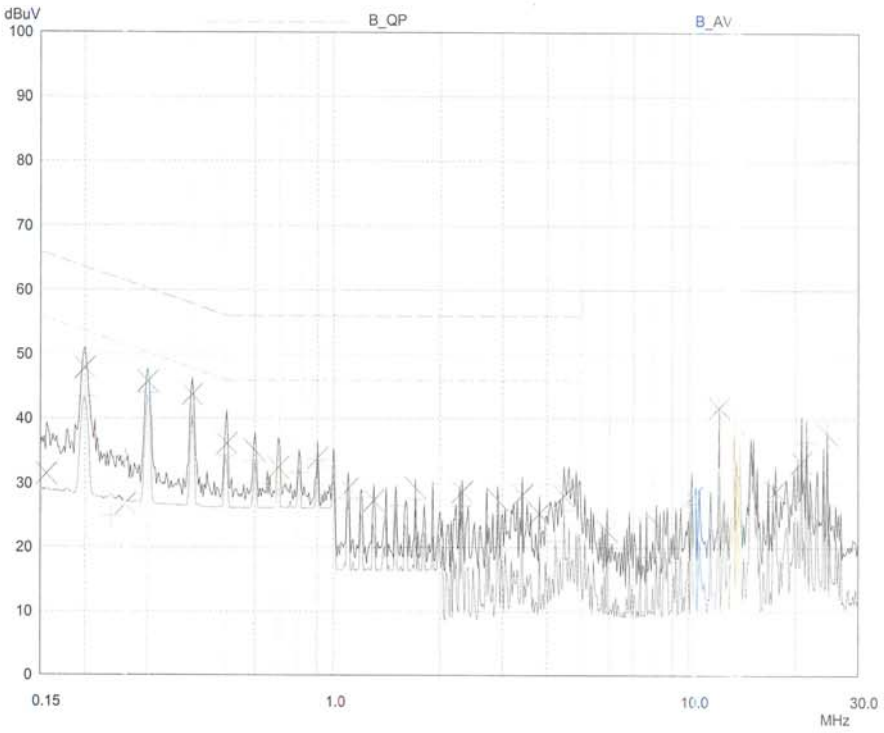

Appendix 2. Phorographs of EUT in side PCB

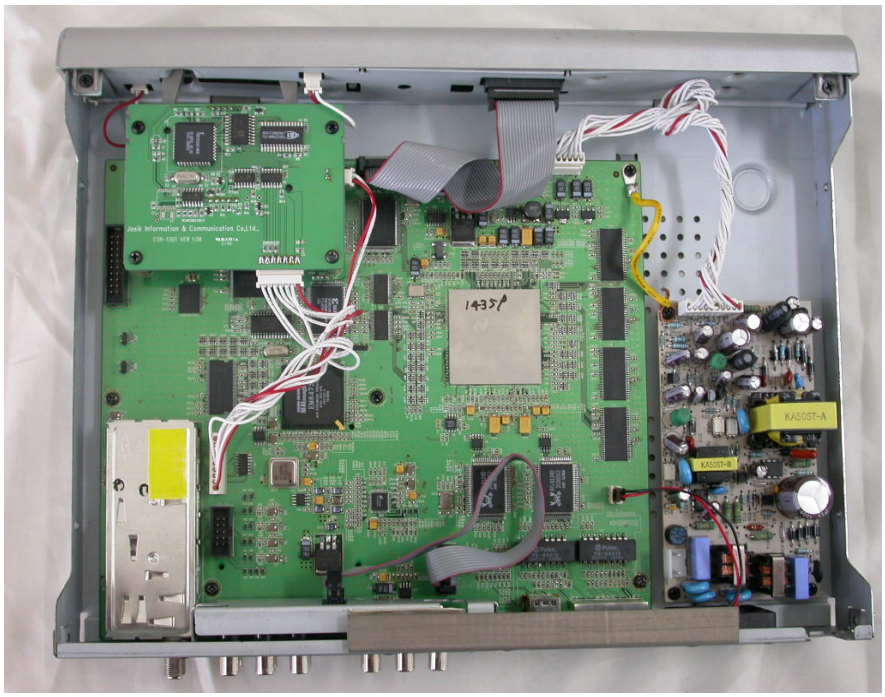
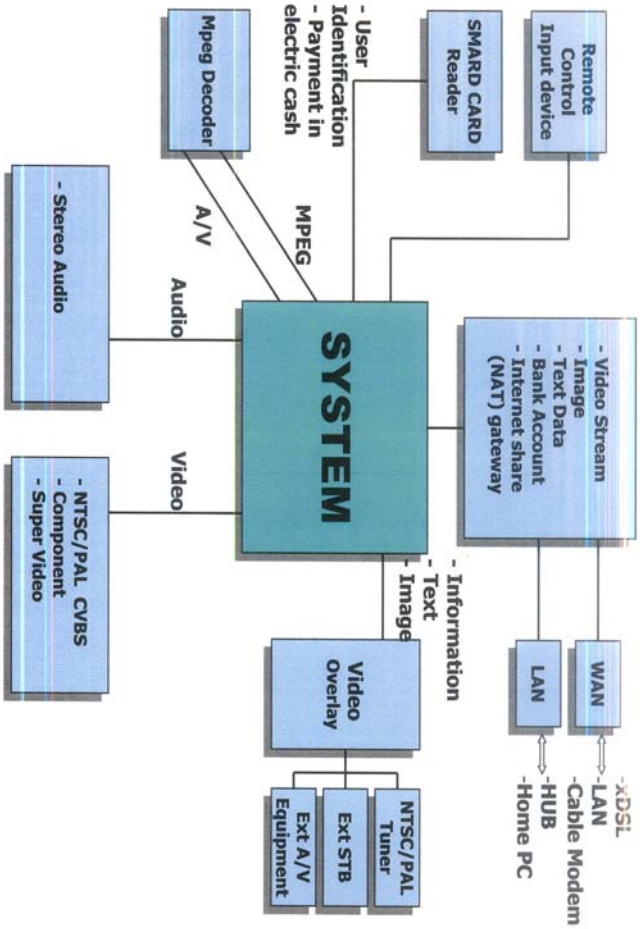
Appendix 3. Block diagram of EUT