FCC 47 CFR PART 15 SUBPART C

TEST REPORT

For

Applicant:	**Li Seng Technology Limited**
Address:	**9/F, Shiu Fung Hong Building, 239-241 Wing Lok Street, Hong Kong**
Product Name:	**Bluetooth LE module**
Model Name:	**LSN51822, LSN51xxx**
Brand Name:	**Li Seng**
FCC ID:	**RR3-LSN51822**
Report No.:	**MTE/SAL/F14070746**
Date of Issue:	**July 31, 2014**

Issued by:	**Most Technology Service Co., Ltd.**
Address :	**No.5, Langshan 2nd Road, North District, Hi-tech Industrial Park, Nanshan, Shenzhen, Guangdong, China**
Tel :	**86-755-8617 0306**
Fax :	**86-755-8617 0310**

The report consists 53 pages in total. It may be duplicated completely for legal use with the approval of the applicant. It should not be reproduced except in full, without the written approval of our laboratory. The client should not use it to claim product endorsement by MOST. The test results in the report only apply to the tested sample. The test report shall be invalid without all the signatures of testing engineers, reviewer and approver.

TABLE OF CONTENTS

1. VERIFICATION OF CONFORMITY 4
2. GENERAL INFORMATION 5
2.1 Product Information 5
2.2 Objective 6
2.3 Test Standards and Results 6
2.4 Environmental Conditions 6
2.5 MEASUREMENT UNCERTAINTY 6
3. TEST FACILITY 7
3.1TEST FACILITY 7
3.2 Test Conditions 7
3.3 Channel List 8
3.4 Description of Test Modes 8
3.5 Table of Parameters of Text Software Setting 9
3.6 FCC PART 15.205 RESTRICTED BANDS OF OPERATIONS 10
4. SETUP OF EQUIPMENT UNDER TEST 11
4.1 SUPPORT EQUIPMENT 11
4.2 TEST EQUIPMENT LIST 12
5. 47 CFR Part 15C 15.249 Requirements 13
5.1 Spurious Emission Test 13
5.1.1 Requirement 13
5.1.2 Test Description 14
5.1.3 Test Description 15
5.1.5 Test Result 16
5.2 Band Edge 22
5.2.1 Requirement 22
5.2.2 Test Description 22
5.2.3Test Result 22
5.3 LINE CONDUCTED EMISSION TEST 27
5.3.1. LIMITS OF LINE CONDUCTED EMISSION TEST 27
5.3.2. BLOCK DIAGRAM OF TEST SETUP 27
5.3.3. PRELIMINARY PROCEDURE OF LINE CONDUCTED EMISSION TEST 28
5.3.4. FINAL PROCEDURE OF LINE CONDUCTED EMISSION TEST 28
5.3.5. Test result 28
5.3.5. TEST RESULT OF LINE CONDUCTED EMISSION TEST 29
5.4 20 dB Bandwidth 31
5.4.1 Definition 31

5.4.2 Block Diagram Of Test Setup 31
5.4.3 Test Result..... 31
5.5 Antenna Requirement..... 33
5.5.1 Definition 33
5.5.2 Evaluation Criteria 33
5.5.3 Evaluation Results..... 33
APPENDIX 1 34
PHOTOGRAPHS OF TEST SETUP..... 34

1. VERIFICATION OF CONFORMITY

Equipment Under Test:	Bluetooth LE module
Brand Name:	Li Seng
Model Number:	LSN51822
Series Number:	LSN51xxx
Description of Differences:	Only different in model name.
FCC ID:	RR3-LSN51822
Applicant:	Li Seng Technology Limited 9/F, Shiu Fung Hong Building, 239-241 Wing Lok Street, Hong Kong
Manufacturer:	Li Seng Technology Limited (Shenzhen) Room 903, Block 1, Mei Nian Plaza, Nanhai Road, Nanshan District, Shenzhen, China
Technical Standards:	47 CFR Part 15 Subpart C
File Number:	MTE/SAL/F14070746
Date of test:	July 10-31, 2014
Deviation:	None
Condition of Test Sample:	Normal
Test Result:	PASS

The above equipment was tested by MOST for compliance with the requirements set forth in FCC rules and the Technical Standards mentioned above. This said equipment in the configuration described in this report shows the maximum emission levels emanating from equipment and the level of the immunity endurance of the equipment are within the compliance requirements.

The test results of this report relate only to the tested sample identified in this report.

Tested by (+ signature): _____

Sophia Liu July 10, 2014

Review by (+ signature): _____

Henry Chen July 31, 2014

Approved by (+ signature): _____

Yvette Zhou(Manager) July 31, 2014

2. GENERAL INFORMATION

2.1 Product Information

Product:	Bluetooth LE module
Trade Name:	Li Seng
Model Number:	LSN51822
Series Number:	LSN51XXX
Description of Differences:	Only different in model name.
Power Supply:	DC 3.7V by Netbook
Frequency Range:	2402MHz -2480MHz
Modulation Type:	GFSK
Modulation Technique:	DSSS
Antenna Type:	Internal Fixed
Antenna Gain:	0dBi
Channel Spacing:	2MHz
Channel Number:	40
Temperature Range:	-20°C ~ +75°C

NOTE:

1. *For a more detailed features description about the EUT, please refer to User's Manual.*

2.2 Objective

Perform FCC Part 15 Subpart C tests for FCC Marking.

2.3 Test Standards and Results

Test items and the results are as bellow:

No.	Section	Description	Result	Date of Test
1	15.249(a)	Spurious Emission	PASS	2014-07-10
2	15.249(a)	Band Edge	PASS	2014-07-10
3	15.207	Power Line Conducted Emission Test	PASS	2014-07-31
4	15.249	20dB Bandwidth	PASS	2014-07-10
5	15.203	Antenna Requirement	PASS	2014-07-10

Note: 1. The test result judgment is decided by the limit of measurement standard
2. The information of measurement uncertainty is available upon the customer's request.

2.4 Environmental Conditions

During the measurement the environmental conditions were within the listed ranges:

- Temperature: 15-35ºC
- Humidity: 30-60 %
- Atmospheric pressure: 86-106 kPa

2.5 MEASUREMENT UNCERTAINTY

The uncertainty is calculated using the methods suggested in the "Guide to the Expression of Uncertainty in Measurement" (GUM) published by ISO.

The report uncertainty of measurement y±U, where expended uncertainly U is based on a standard uncertainty multiplied by a coverage factor of k=2,Providing a level of confidence of approximately 95%

- Uncertainty of Conducted Emission, Uc = ±1.8dB
- Uncertainty of Radiated Emission, Uc = ±3.2dB

3. TEST FACILITY

3.1TEST FACILITY

Test Site:	Most Technology Service Co., Ltd.
Location:	No.5, Langshan 2nd Rd., North Hi-Tech Industrial park, Nanshan, Shenzhen, Guangdong ,China
Description:	There is one 3m semi-anechoic an area test sites and two line conducted labs for final test. The Open Area Test Sites and the Line Conducted labs are constructed and calibrated to meet the FCC requirements in documents ANSI C63.4:2009 and CISPR 16 requirements. The FCC Registration Number is **490827.** The **IC** Registration Number is **7103A-1.** The **CNAS** Registration Number is **CNAS L3573.**
Site Filing:	The site description is on file with the Federal Communications Commission, 7435 Oakland Mills Road, Columbia, MD 21046.
Instrument Tolerance:	All measuring equipment is in accord with ANSI C63.4:2009 and CISPR 16 requirements that meet industry regulatory agency and accreditation agency requirement.
Ground Plane:	Two conductive reference ground planes were used during the Line Conducted Emission, one in vertical and the other in horizontal. The dimensions of these ground planes are as below. The vertical ground plane was placed distancing 40 cm to the rear of the wooden test table on where the EUT and the support equipment were placed during test. The horizontal ground plane projected 50 cm beyond the footprint of the EUT system and distanced 80 cm to the wooden test table. For Radiated Emission Test, one horizontal conductive ground plane extended at least 1m beyond the periphery of the EUT and the largest measuring antenna, and covered the entire area between the EUT and the antenna.

3.2 Test Conditions

The EUT has been tested under normal operating（TX）.

The field strength of radiation emission was measured in the following position: EUT lie-down position (Y axis).

The following data show Y axis setup.

Based on client request, all normal using modes of the normal function were tested but only the worst test data of the worst mode is reported by this report.

3.3 Channel List

Channel List for GFSK Mode					
Channel	Frequency (MHz)	Channel	Frequency (MHz)	Channel	Frequency (MHz)
00	2402MHz	14	2430MHz	28	2458MHz
01	2404MHz	15	2432MHz	29	2460MHz
02	2406MHz	16	2434MHz	30	2462MHz
03	2408MHz	17	2436MHz	31	2464MHz
04	2410MHz	18	2438MHz	32	2466MHz
05	2412MHz	19	2440MHz	33	2468MHz
06	2414MHz	20	2442MHz	34	2470MHz
07	2416MHz	21	2444MHz	35	2472MHz
08	2418MHz	22	2446MHz	36	2474MHz
09	2420MHz	23	2448MHz	37	2476MHz
10	2422MHz	24	2450MHz	38	2478MHz
11	2424MHz	25	2452MHz	39	2480MHz
12	2426MHz	26	2454MHz		
13	2428MHz	27	2456MHz		

3.4 Description of Test Modes

To investigate the maximum EMI emission characteristics generates from EUT, the test system was pre-scanning tested base on the consideration of following EUT operation mode or test configuration mode which possible have effect on EMI emission level, Each of these EUT operation mode(s) or test configuration mode(s) mentioned above was evaluated respectively

Pre-test Mode	Description
Mode 1	GFSK CH00/CH19/CH39

Note:

The measurements are performed at the highest, middle, lowest available channels.

3.5 Table of Parameters of Text Software Setting

During testing channel & power controlling software provided by the customer was used to control the operating channel as well as the output power level, the RF output power selection is for the setting of RF output power expected by the customer and is going to be fixed on the firmware of the final end product power parameters of Bluetooth.

Test software Version	Test channels		
GFSK Mode	2402MHz	2440MHz	2480MHz

Conducted Emissions

The EUT is placed on the turntable, which is 0.8 m above ground plane. According to the requirements in Section 13.1.4.1 of ANSI C63.4:2009,Conducted emissions from the EUT measured in the frequency range between 0.15 MHz and 30MHz using CISPR Quasi-peak and average detector modes.

Radiated Emissions

The EUT is placed on a turn table, which is 0.8 m above ground plane. The turntable shall rotate 360 degrees to determine the position of maximum emission level. EUT is set 3m away from the receiving antenna, which varied from 1m to 4m to find out the highest emission. And also, each emission was to be maximized by changing the polarization of receiving antenna both horizontal and vertical. In order to find out the maximum emissions, exploratory radiated emission measurements were made according to the requirements in Section 13.1.4.1 of ANSI C63.4:2009.

3.6 FCC PART 15.205 RESTRICTED BANDS OF OPERATIONS

(a) Except as shown in paragraph (d) of this section, only spurious emissions are permitted in any of the frequency bands listed below:

MHz	MHz	MHz	GHz
0.090 - 0.110	16.42 - 16.423	399.9 - 410	4.5 - 5.15
[1]0.495 - 0.505	16.69475 - 16.69525	608 - 614	5.35 - 5.46
2.1735 - 2.1905	16.80425 - 16.80475	960 - 1240	7.25 - 7.75
4.125 - 4.128	25.5 - 25.67	1300 - 1427	8.025 - 8.5
4.17725 - 4.17775	37.5 - 38.25	1435 - 1626.5	9.0 - 9.2
4.20725 - 4.20775	73 - 74.6	1645.5 - 1646.5	9.3 - 9.5
6.215 - 6.218	74.8 - 75.2	1660 - 1710	10.6 - 12.7
6.26775 - 6.26825	108 - 121.94	1718.8 - 1722.2	13.25 - 13.4
6.31175 - 6.31225	123 - 138	2200 - 2300	14.47 - 14.5
8.291 - 8.294	149.9 - 150.05	2310 - 2390	15.35 - 16.2
8.362 - 8.366	156.52475 - 156.52525	2483.5 - 2500	17.7 - 21.4
8.37625 - 8.38675	156.7 - 156.9	2655 - 2900	22.01 - 23.12
8.41425 - 8.41475	162.0125 - 167.17	3260 - 3267	23.6 - 24.0
12.29 - 12.293	167.72 - 173.2	3332 - 3339	31.2 - 31.8
12.51975 - 12.52025	240 - 285	3345.8 - 3358	36.43 - 36.5
12.57675 - 12.57725	322 - 335.4	3600 - 4400	([2])
13.36 - 13.41			

[1] Until February 1, 1999, this restricted band shall be 0.490-0.510 MHz.

[2] Above 38.6

(b) Except as provided in paragraphs (d) and (e), the field strength of emissions appearing within these frequency bands shall not exceed the limits shown in Section 15.209. At frequencies equal to or less than 1000 MHz, compliance with the limits in Section 15.209 shall be demonstrated using measurement instrumentation employing a CISPR quasi-peak detector. Above 1000 MHz, compliance with the emission limits in Section 15.209 shall be demonstrated based on the average value of the measured emissions. The provisions in Section 15.35 apply to these measurements.

4. SETUP OF EQUIPMENT UNDER TEST

4.1 SUPPORT EQUIPMENT

Device Type	Manufacturer	Model Name	Serial No.	Data Cable	Power Cable
Notebook	Lenovo	E425	R9-KZL4B	1.6m Un-shielded	1.8m Un-shielded

Remark:

All the equipment/cables were placed in the worst-case configuration to maximize the emission during the test. Grounding was established in accordance with the manufacturer's requirements and conditions for the intended use.

4.2 TEST EQUIPMENT LIST

Instrumentation: The following list contains equipment used at Most for testing. The equipment conforms to the CISPR 16-1 / ANSI C63.2 Specifications for Electromagnetic Interference and Field Strength Instrumentation from 10 kHz to 1.0 GHz or above.

No.	Equipment	Manufacturer	Model No.	S/N	Calculator date	Calculator Interval
1	Test Receiver	Rohde & Schwarz	ESCI	100492	2014/03/10	1 Year
2	L.I.S.N.	Rohde & Schwarz	ENV216	100093	2014/03/10	1 Year
3	Coaxial Switch	Anritsu Corp	MP59B	6200283933	2014/03/07	1 Year
4	Terminator	Hubersuhner	50Ω	No.1	2014/03/07	1 Year
5	RF Cable	SchwarzBeck	N/A	No.1	2014/03/07	1 Year
6	Test Receiver	Rohde & Schwarz	ESPI	101202	2014/03/10	1 Year
7	Bilog Antenna	Sunol	JB3	A121206	2014/03/14	1 Year
8	Horn Antenna	SCHWARZBECK	BBHA9120D	756	2014/03/14	1 Year
9	Horn Antenna	Penn Engineering	9034	8376	2014/03/14	1 Year
10	Cable	Resenberger	N/A	NO.1	2014/03/07	1 Year
11	Cable	SchwarzBeck	N/A	NO.2	2014/03/07	1 Year
12	Cable	SchwarzBeck	N/A	NO.3	2014/03/07	1 Year
13	DC Power Filter	DuoJi	DL2×30B	N/A	2014/03/07	1 Year
14	Single Phase Power Line Filter	DuoJi	FNF 202B30	N/A	2014/03/07	1 Year
15	3 Phase Power Line Filter	DuoJi	FNF 402B30	N/A	2014/03/07	1 Year
16	Test Receiver	Rohde & Schwarz	ESCI	100492	2014/03/10	1 Year
17	Absorbing Clamp	Luthi	MDS21	3635	2014/03/12	1 Year
18	Coaxial Switch	Anritsu Corp	MP59B	6200283933	2014/03/07	1 Year
19	AC Power Source	Kikusui	AC40MA	LM003232	2014/03/10	1 Year
20	Test Analyzer	Kikusui	KHA1000	LM003720	2014/03/10	1 Year
21	Line Impendence Network	Kikusui	LIN40MA-PCR-L	LM002352	2014/03/10	1 Year
22	ESD Tester	Kikusui	KES4021	LM003537	2014/03/07	1 Year
23	EMCPRO System	EM Test	UCS-500-M4	V0648102026	2014/03/10	1 Year
24	Signal Generator	IFR	2032	203002/100	2014/03/10	1 Year
25	Amplifier	A&R	150W1000	301584	2014/03/14	1 Year
26	CDN	FCC	FCC-801-M2-25	47	2014/03/10	1 Year
27	CDN	FCC	FCC-801-M3-25	107	2014/03/10	1 Year
28	EM Injection Clamp	FCC	F-203I-23mm	403	2014/03/10	1 Year
29	RF Cable	MIYAZAKI	N/A	No.1/No.2	2014/03/10	1 Year
30	Universal Radio Communication Tester	ROHDE&SCHWARZ	CMU200	0304789	2014/03/10	1 Year
31	Telecommunication Antenna	European Antennas	PSA 75301R/170	0304213	2014/03/10	1 Year
32	Telecommunication Test Equipment	R&S	CMU200	N/A	2014/03/07	1 Year
33	8 Loop Antenna	ARA	PLA-1030/B	1029	2014/02/19	1 Year
34	Power Meter	R&S	NRVS	100696	2014/07/06	1 Year
35	Power Sensor	R&S	URV5-Z4	0395.1619.05	2014/07/06	1 Year

NOTE: *Equipments listed above have been calibrated and are in the period of validation.*

5. 47 CFR Part 15C 15.249 Requirements

5.1 Spurious Emission Test

5.1.1 Requirement

According to FCC section 15.249(a):

Except as provided in paragraph (a) of this section, the field strength of emissions from intentional radiators operated within these frequency bands shall comply with the following:

Fundamental Frequency (MHz)	Field Strength of Fundamental (mV/m)	Field Strength of Harmonics (µV/m)
902-928	50	500
2400-2483.5	50	500
5725-5875	50	500
24000-24250	250	2500

According to FCC section 15.109 (a), except as provided elsewhere in this subpart, the emissions from an intentional radiator shall not exceed the field strength levels specified in the following table:

Frequency (MHz)	Field Strength (µV/m)	Measurement Distance (m)
1.705 – 30.0	30	30
30 – 88	100	3
88 – 216	150	3
216 – 960	200	3
Above 960	500	3

Remark: *Except as provided in paragraph (g), fundamental emissions from intentional radiators operating under this Section shall not be located in the frequency bands 54-72 MHz, 76-88 MHz, 174-216 MHz or 470-806 MHz. However, operation within these frequency bands is permitted under other sections of this Part, e.g., Sections 15.231 and 15.241.*

In the above emission table, the tighter limit applies at the band edges.

Frequency (MHz)	Field Strength (µV/m)	Measurement Distance (m)
30 – 88	100	3
88 – 216	150	3
216 – 960	200	3
Above 960	500	3

5.1.2 Test Description

Test Setup:

From 9KHz to 30MHz:

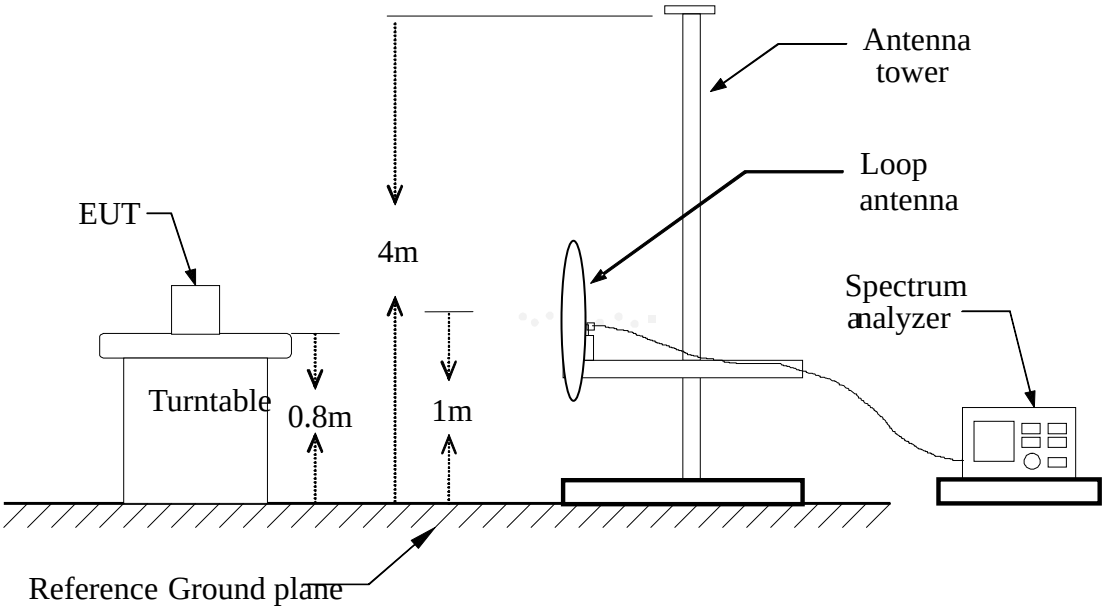

From 30MHz to 1GHz:

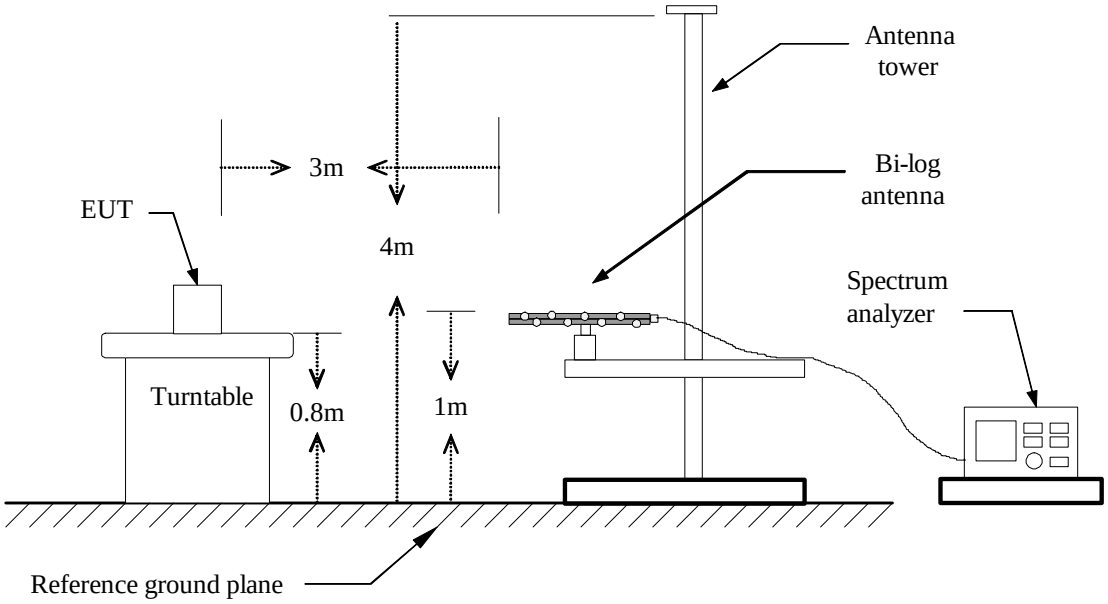

Above 1GHz:

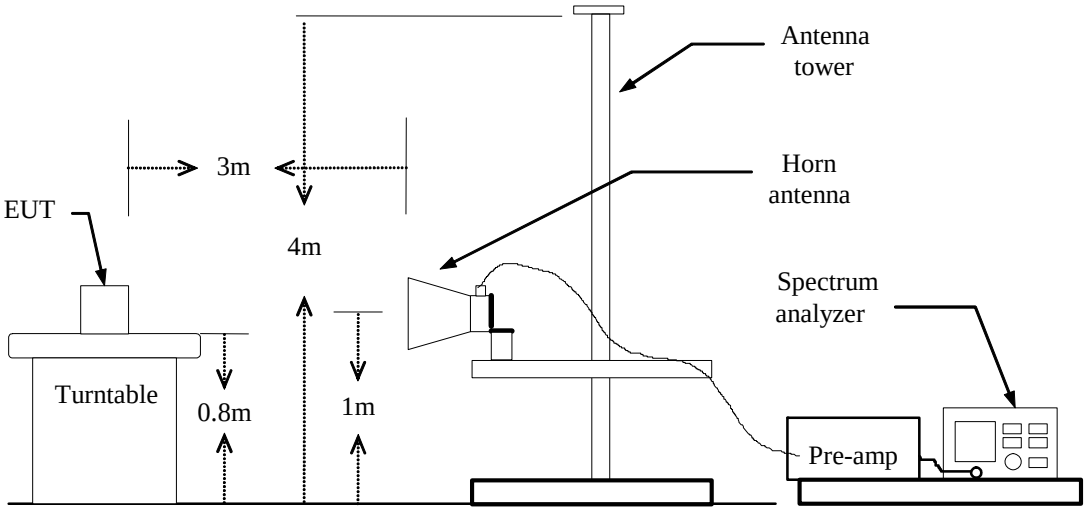

5.1.3 Test Description

1. The EUT is placed on a turntable, which is 0.8m above ground plane.
2. The turntable shall be rotated for 360 degrees to determine the position of maximum emission level.
3. EUT is set 3m away from the receiving antenna, which is varied from 1m to 4m to find out the highest emissions.
4. Maximum procedure was performed on the six highest emissions to ensure EUT compliance.
5. And also, each emission was to be maximized by changing the polarization of receiving antenna both horizontal and vertical.
6. Set the spectrum analyzer in the following setting as:

   Below 1GHz: RBW=100 kHz / VBW=300 kHz / Sweep=AUTO

   Above 1GHz ☹ a) PEAK: RBW=VBW=1MHz / Sweep=AUTO

5.1.4 AVERAGE: RBW=1MHz / VBW=10Hz / Sweep=AUTO

7. Repeat above procedures until the measurements for all frequencies are complete.

5.1.5 Test Result

From 9 KHz to 30MHz:

Freq. (MHz)	Ant. Pol H/V	Peak Reading (dBuV)	AV Reading (dBuV)	Ant. / CL CF (dB)	Actual Fs		Peak Limit (dBuV/m)	AV Limit (dBuV/m)	AV Margin (dB)
					Peak (dBuV/m)	AV (dBuV/m)			
N/A	H								>20
N/A	V								>20

-Note: No test data was detected in below 30MHz.

From 30MHz to 1GHz:

The following test mode(s) were scanned during the preliminary test:

Preliminary Radiated Emission Test				
Frequency Range Investigated		9KHz TO 26 GHz		
Mode of operation	Date	Report No.	Data#	Worst Mode
BT Mode	2014-07-10	MTE/SAL/F14070746	LSN51822_2_(V, H)	☒

Note:

The GFSK Low channel modulation was the worst case condition, The worse test data was shown on the summary data page.

Compliance Laboratory
Address:No.5,Langshan 2nd Rd., North Hi-Tech Industrial park
Guangdong ,China
Tel: 0755-86026850 Fax: 0755-26013350

Radiated Emission Measurement

File :LSN51822 Data :#1 Date: 2014-7-10 Time: 15:17:54

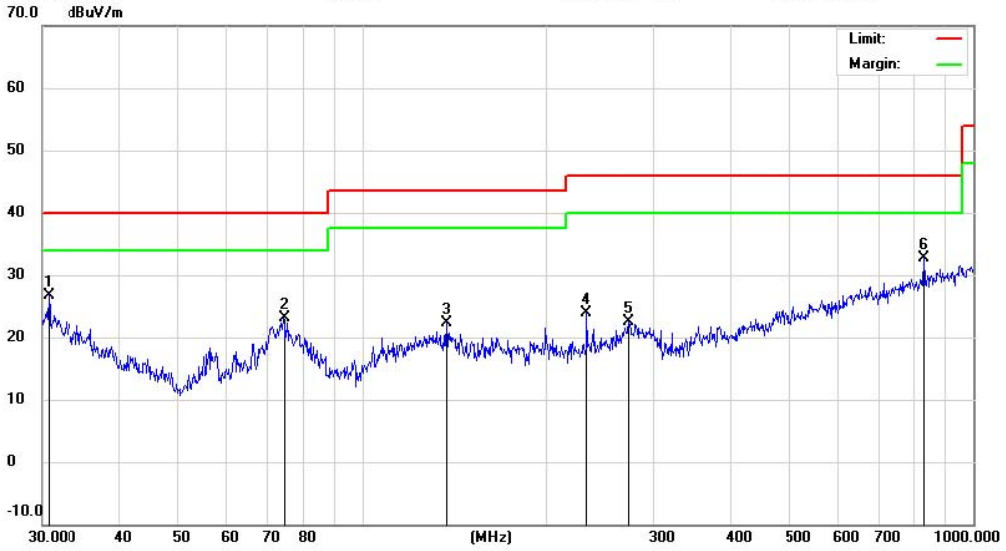

Site Chamber #1 Polarization: *Horizontal* Temperature: 26
Limit: FCC Part15 B 3M Radiation Power: DC 3V Humidity: 61 %
EUT: Bluetooth LE module Distance:
M/N: LSN51822
Mode: BT
Note:

No.	Mk.	Freq.	Reading Level	Correct Factor	Measure-ment	Limit	Over		Antenna Height	Table Degree	
		MHz	dBuV	dB	dBuV/m	dBuV/m	dB	Detector	cm	degree	Comment
1	*	30.7454	5.20	21.59	26.79	40.00	-13.21	QP			
2		74.3955	11.44	11.57	23.01	40.00	-16.99	QP			
3		137.9028	5.09	17.31	22.40	43.50	-21.10	QP			
4		233.3486	7.20	16.73	23.93	46.00	-22.07	QP			
5		273.2340	3.43	19.06	22.49	46.00	-23.51	QP			
6		830.4001	5.65	27.00	32.65	46.00	-13.35	QP			

*:Maximum data x:Over limit !:over margin

Engineer Signature: John

Compliance Laboratory
Address:No.5,Langshan 2nd Rd., North Hi-Tech Industrial park
Guangdong ,China
Tel: 0755-86026850 Fax: 0755-26013350

Radiated Emission Measurement

File :LSN51822 Data :#2 Date: 2014-7-10 Time: 15:38:11

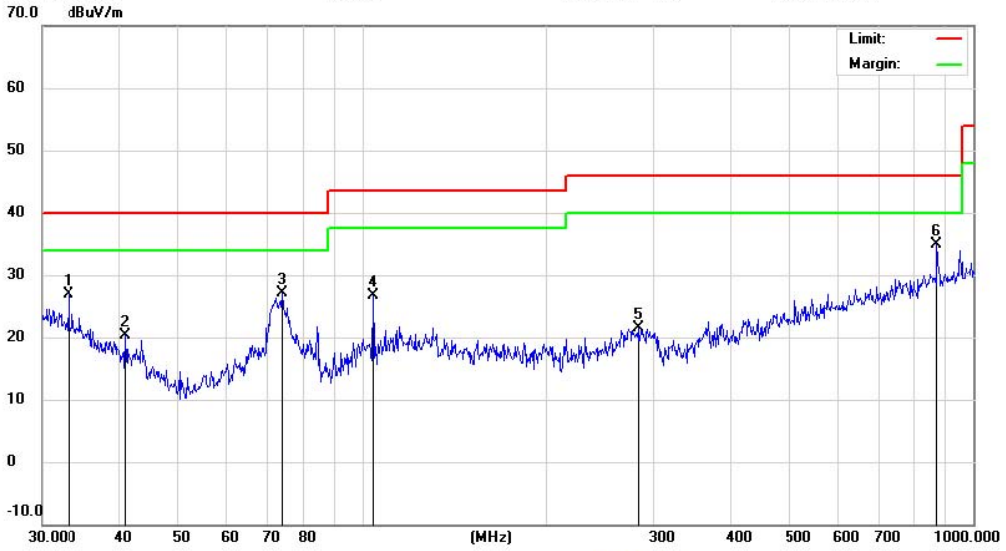

Site Chamber #1 Polarization: *Vertical* Temperature: 26
Limit: FCC Part15 B 3M Radiation Power: DC 3V Humidity: 61 %
EUT: Bluetooth LE module Distance:
M/N: LSN51822
Mode: BT
Note:

No.	Mk.	Freq.	Reading Level	Correct Factor	Measure-ment	Limit	Over		Antenna Height	Table Degree	
		MHz	dBuV	dB	dBuV/m	dBuV/m	dB	Detector	cm	degree	Comment
1		33.2111	6.02	20.89	26.91	40.00	-13.09	QP			
2		41.1320	4.95	15.35	20.30	40.00	-19.70	QP			
3		74.1351	15.49	11.58	27.07	40.00	-12.93	QP			
4		104.1701	12.25	14.41	26.66	43.50	-16.84	QP			
5		282.9849	2.12	19.40	21.52	46.00	-24.48	QP			
6	*	872.1832	7.96	27.02	34.98	46.00	-11.02	QP			

*:Maximum data x:Over limit l:over margin

Engineer Signature: John

Above 1 GHz

Operation Mode:	GFSK Mode/CH Low	**Test Date:**	July 10, 2014
Temperature:	20°C	**Tested by:**	Allen
Humidity:	70 % RH	**Polarity:**	Ver. / Hor.

Freq. (MHz)	Ant. Pol H/V	Peak Reading (dBuV)	AV Reading (dBuV)	Ant. / CL CF (dB)	Actual Fs		Peak Limit (dBuV/m)	AV Limit (dBuV/m)	AV Margin (dB)
					Peak (dBuV/m)	AV (dBuV/m)			
2402.00	H	80.27	72.27	16.25	96.52	88.52	114.00	94.00	-5.48
4804.00	H	30.48	23.20	20.18	50.66	43.38	74.00	54.00	-10.62
N/A									>20
2402.00	V	79.17	69.57	16.25	95.42	85.82	114.00	94.00	-8.18
4804.00	V	30.13	21.67	20.18	50.31	41.85	74.00	54.00	-12.15
N/A									>20

Notes:

1. *Measuring frequencies from 1 GHz to the 10th harmonic of highest fundamental frequency.*
2. *Measurements above show only up to 6 maximum emissions noted, or would be lesser if no specific emissions from the EUT are recorded (ie: margin>20dB from the applicable limit) and considered that's already beyond the background noise floor.*
3. *Radiated emissions measured in frequency above 1000MHz were made with an instrument using Peak detector mode and average detector mode of the emission shown in Actual FS column.*
4. *Spectrum setting:*
   a. *Peak Setting 1GHz - 26GHz, RBW = 1MHz, VBW = 1MHz, Sweep time = 200 ms.*
   b. *AV Setting 1GH z- 26GHz, RBW = 1MHz, VBW = 10Hz, Sweep time = 200 ms.*

Operation Mode:	GFSK Mode/CH Mid	**Test Date:**	July 10, 2014
Temperature:	20°C	**Tested by:**	Allen
Humidity:	70 % RH	**Polarity:**	Ver. / Hor.

Freq. (MHz)	Ant. Pol H/V	Peak Reading (dBuV)	AV Reading (dBuV)	Ant. / CL CF (dB)	Actual Fs		Peak Limit (dBuV/m)	AV Limit (dBuV/m)	AV Margin (dB)
					Peak (dBuV/m)	AV (dBuV/m)			
2440.00	H	80.76	72.27	17.01	97.77	89.28	114.00	94.00	-4.72
4880.00	H	30.63	23.12	21.57	52.20	44.69	74.00	54.00	-9.31
N/A									>20
2440.00	V	79.61	69.49	17.01	96.62	86.50	114.00	94.00	-7.50
4880.00	V	28.80	21.38	21.57	50.37	42.95	74.00	54.00	-11.05
N/A									>20

Notes:

1. Measuring frequencies from 1 GHz to the 10th harmonic of highest fundamental frequency.
2. Measurements above show only up to 6 maximum emissions noted, or would be lesser if no specific emissions from the EUT are recorded (ie: margin>20dB from the applicable limit) and considered that's already beyond the background noise floor.
3. Radiated emissions measured in frequency above 1000MHz were made with an instrument using Peak detector mode and average detector mode of the emission shown in Actual FS column.
4. Spectrum setting:
   a. Peak Setting 1GHz - 26GHz, RBW = 1MHz, VBW = 1MHz, Sweep time = 200 ms.
   b. AV Setting 1GH z- 26GHz, RBW = 1MHz, VBW = 10Hz, Sweep time = 200 ms.

Operation Mode:	GFSK Mode/CH High	**Test Date:**	July 10, 2014
Temperature:	20°C	**Tested by:**	Allen
Humidity:	70 % RH	**Polarity:**	Ver. / Hor.

Freq. (MHz)	Ant. Pol H/V	Peak Reading (dBuV)	AV Reading (dBuV)	Ant. / CL CF (dB)	Actual Fs		Peak Limit (dBuV/m)	AV Limit (dBuV/m)	AV Margin (dB)
					Peak (dBuV/m)	AV (dBuV/m)			
2480.00	H	80.85	71.14	17.24	98.09	88.38	114.00	94.00	-5.62
4960.00	H	30.59	21.01	22.64	53.23	43.65	74.00	54.00	-10.35
N/A									>20
2480.00	V	78.75	71.05	17.24	95.99	88.29	114.00	94.00	-5.71
4960.00	V	28.95	20.06	22.64	51.59	42.70	74.00	54.00	-11.30
N/A									>20

Notes:

1. Measuring frequencies from 1 GHz to the 10th harmonic of highest fundamental frequency.
2. Measurements above show only up to 6 maximum emissions noted, or would be lesser if no specific emissions from the EUT are recorded (ie: margin>20dB from the applicable limit) and considered that's already beyond the background noise floor.
3. Radiated emissions measured in frequency above 1000MHz were made with an instrument using Peak detector mode and average detector mode of the emission shown in Actual FS column.
4. Spectrum setting:
   a. Peak Setting 1GHz - 26GHz, RBW = 1MHz, VBW = 1MHz, Sweep time = 200 ms.
   b. AV Setting 1GH z- 26GHz, RBW = 1MHz, VBW = 10Hz, Sweep time = 200 ms.

5.2 Band Edge

5.2.1 Requirement

According to FCC section 15.249(a), in any 100kHz bandwidth outside the frequency band in which the spread spectrum or digitally modulated intentional radiator is operating, the radio frequency power that is produced by the intentional radiator shall be at least 20dB below that in the 100kHz bandwidth within the band that contains the highest level of the desired power, based on either an RF conducted or a radiated measurement.

5.2.2 Test Description

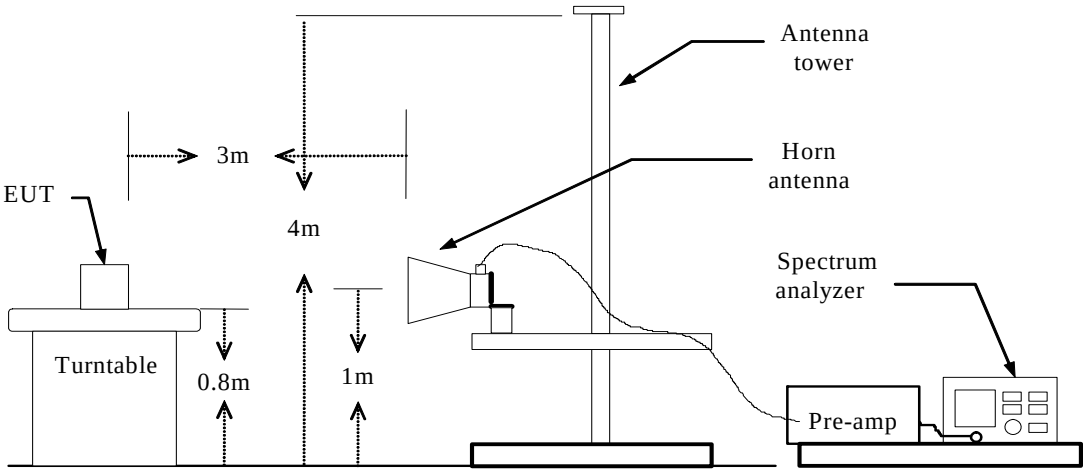

5.2.3Test Result

The EUT operates at hopping-off test mode. The lowest and highest channels are tested to verify the band edge emissions.

Compliance Laboratory
Address:
Tel:+86-755-86026850Fax:+86-755-86170310
http://www.szmost.com

Radiated Emission Measurement

File :LSN51822 Data :#21 Date: 2014-07-10 Time: 11:42:36

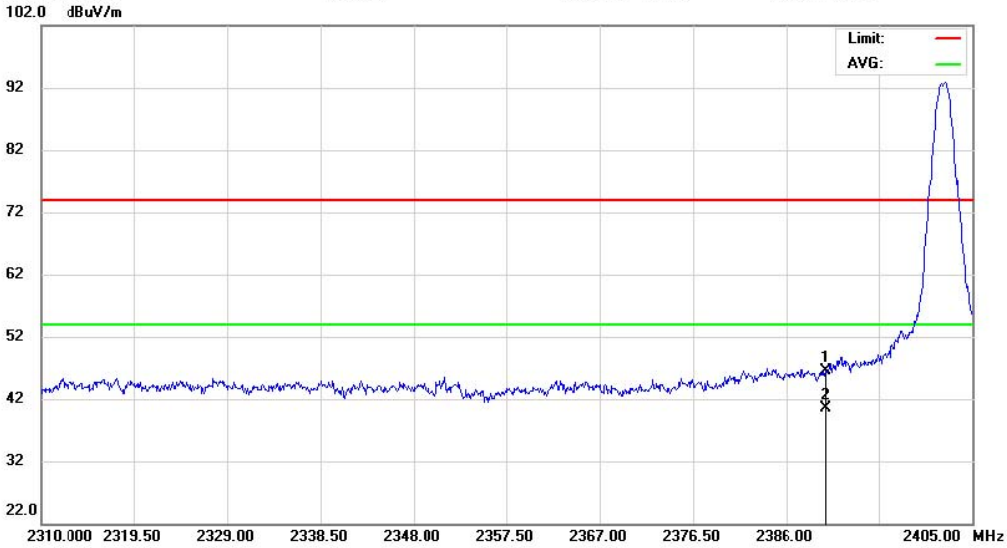

Site RF Chamber #1 Polarization: ***Horizontal*** Temperature: 26
Limit: FCC 1000M-18000M PEAK Power: DC 3V Humidity: 61 %
EUT: Bluetooth LE module Distance:
M/N: LSN51822
Mode: Low CH
Note:

No.	Mk.	Freq.	Reading Level	Correct Factor	Measure-ment	Limit	Over		Antenna Height	Table Degree	
		MHz	dBuV	dB	dBuV/m	dBuV/m	dB	Detector	cm	degree	Comment
1		2390.000	36.11	10.36	46.47	74.00	-27.53	peak			
2	*	2390.000	30.06	10.36	40.42	54.00	-13.58	AVG			

*:Maximum data x:Over limit !:over margin (Reference Only

File :LSN51822\Data :#21 *Page: 1* Engineer Signature: Roy

Compliance Laboratory
Address:
Tel:+86-755-86026850Fax:+86-755-86170310
http://www.szmost.com

Radiated Emission Measurement

File :LSN51822 Data :#22 Date: 2013-07-10 Time: 11:48:23

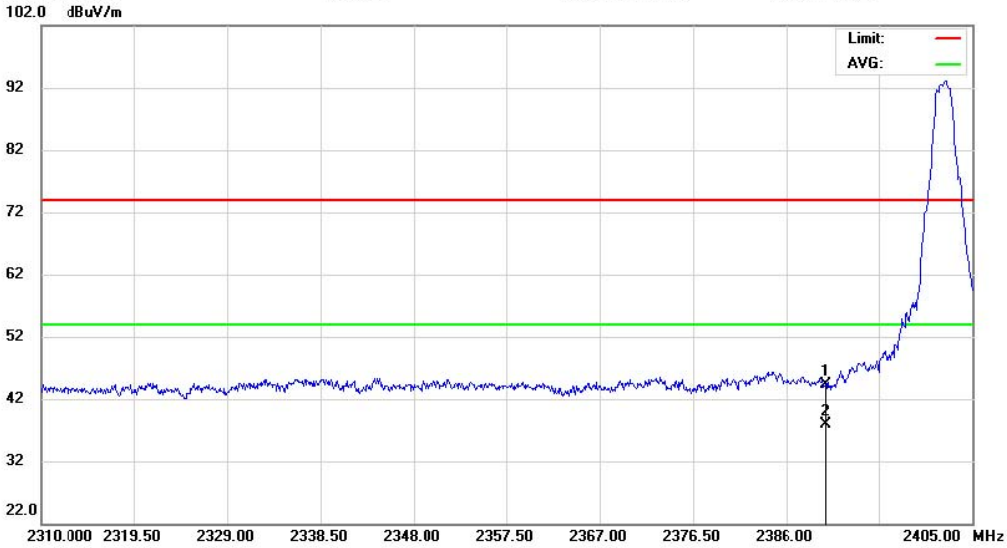

Site RF Chamber #1 Polarization: *Vertical* Temperature: 26
Limit: FCC 1000M-18000M PEAK Power: DC 3V Humidity: 61 %
EUT: Bluetooth LE module Distance:
M/N: LSN51822
Mode: Low CH
Note:

No.	Mk.	Freq.	Reading Level	Correct Factor	Measure-ment	Limit	Over		Antenna Height	Table Degree	
		MHz	dBuV	dB	dBuV/m	dBuV/m	dB	Detector	cm	degree	Comment
1		2390.000	33.87	10.36	44.23	74.00	-29.77	peak			
2	*	2390.000	27.58	10.36	37.94	54.00	-16.06	AVG			

*:Maximum data x:Over limit l:over margin (Reference Only

File :LSN51822\Data :#22 *Page: 1* Engineer Signature: Roy

Compliance Laboratory
Address:
Tel:+86-755-86026850Fax:+86-755-86170310
http://www.szmost.com

Radiated Emission Measurement

File :LSN51822 Data :#23 Date: 2013-0710 Time: 11:52:42

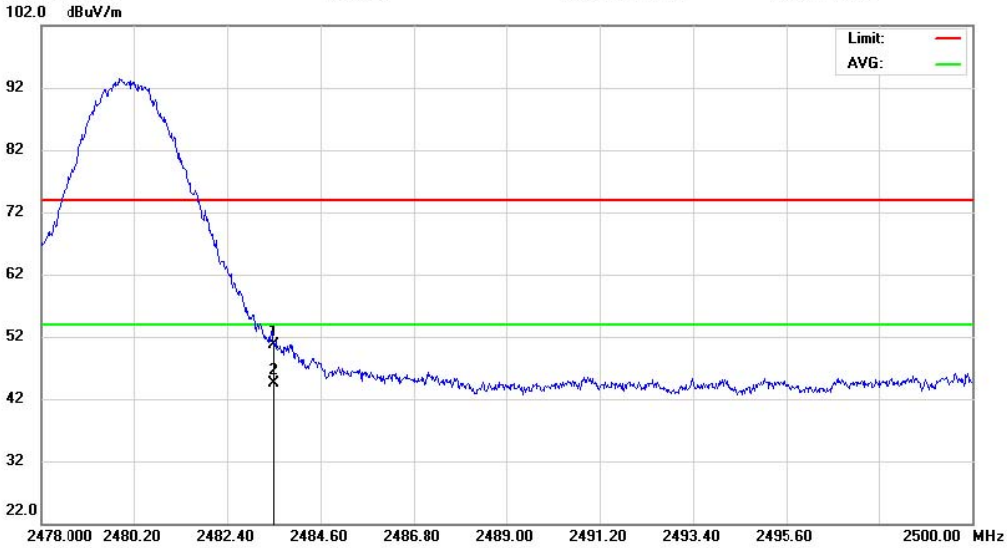

Site RF Chamber #1
Limit: FCC 1000M-18000M PEAK
EUT: Bluetooth LE module
M/N: LSN51822
Mode: High CH
Note:

Polarization: ***Horizontal***
Power: DC 3V
Distance:

Temperature: 26
Humidity: 61 %

No.	Mk.	Freq.	Reading Level	Correct Factor	Measure-ment	Limit	Over		Antenna Height	Table Degree	
		MHz	dBuV	dB	dBuV/m	dBuV/m	dB	Detector	cm	degree	Comment
1		2483.500	40.01	10.73	50.74	74.00	-23.26	peak			
2	*	2483.500	33.76	10.73	44.49	54.00	-9.51	AVG			

*:Maximum data x:Over limit l:over margin (Reference Only

File :LSN51822\Data :#23 *Page: 1* Engineer Signature: Roy

Compliance Laboratory
Address:
Tel:+86-755-86026850Fax:+86-755-86170310
http://www.szmost.com

Radiated Emission Measurement

File :LSN51822 Data :#24 Date: 2013-07-10 Time: 11:57:15

Site RF Chamber #1 Polarization: *Vertical* Temperature: 26
Limit: FCC 1000M-18000M PEAK Power: DC 3V Humidity: 61 %
EUT: Bluetooth LE module Distance:
M/N: LSN51822
Mode: High CH
Note:

No.	Mk.	Freq.	Reading Level	Correct Factor	Measure-ment	Limit	Over		Antenna Height	Table Degree	
		MHz	dBuV	dB	dBuV/m	dBuV/m	dB	Detector	cm	degree	Comment
1		2483.500	39.77	10.73	50.50	74.00	-23.50	peak			
2	*	2483.500	33.42	10.73	44.15	54.00	-9.85	AVG			

*:Maximum data x:Over limit l:over margin (Reference Only

File :LSN51822\Data :#24 *Page: 1* Engineer Signature: Roy

5.3 LINE CONDUCTED EMISSION TEST

5.3.1. LIMITS OF LINE CONDUCTED EMISSION TEST

Frequency	Maximum RF Line Voltage	
	Q.P.(dBuV)	Average(dBuV)
150kHz-500kHz	66-56	56-46
500kHz-5MHz	56	46
5MHz-30MHz	60	50

***Note:** *1. the lower limit shall apply at the transition frequency.*

2. The limit decreases linearly with the logarithm of the frequency in the range 0.15 MHz to 0.50 MHz

5.3.2. BLOCK DIAGRAM OF TEST SETUP

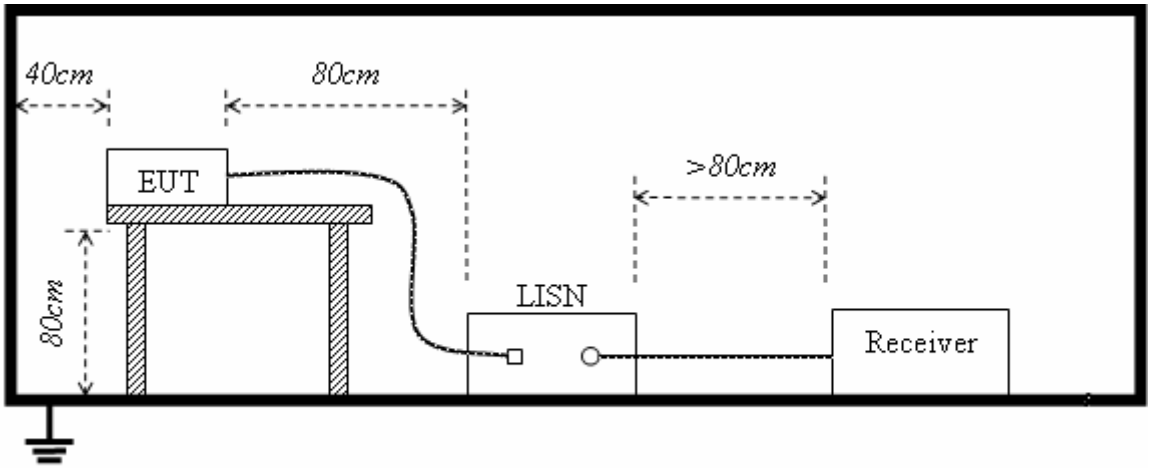

5.3.3. PRELIMINARY PROCEDURE OF LINE CONDUCTED EMISSION TEST

1) The equipment was set up as per the test configuration to simulate typical actual usage per the user's manual. When the EUT is a tabletop system, a wooden table with a height of 0.8 meters is used and is placed on the ground plane as per FCC Part 15 (see Test Facility for the dimensions of the ground plane used). When the EUT is floor-standing equipment, it is placed on the ground plane which has a 3-12 mm non-conductive covering to insulate the EUT from the ground plane.
2) Support equipment, if needed, was placed as per FCC Part 15.
3) All I/O cables were positioned to simulate typical actual usage as per FCC Part 15.
4) The EUT received DC 5V by Adapter which received AC120V/60Hz power through a Line Impedance Stabilization Network (LISN) which supplied power source and was grounded to the ground plane.
5) All support equipments received power from a second LISN supplying power of AC 120V/60Hz, if any.
6) The EUT test program was started. Emissions were measured on each current carrying line of the EUT using a spectrum Analyzer / Receiver connected to the LISN powering the EUT. The LISN has two monitoring points: Line 1 (Hot Side) and Line 2 (Neutral Side). Two scans were taken: one with Line 1 connected to Analyzer / Receiver and Line 2 connected to a 50 ohm load; the second scan had Line 1 connected to a 50 ohm load and Line 2 connected to the Analyzer / Receiver.
7) Analyzer / Receiver scanned from 150 kHz to 30 MHz for emissions in each of the test modes.
8) During the above scans, the emissions were maximized by cable manipulation.

5.3.4. FINAL PROCEDURE OF LINE CONDUCTED EMISSION TEST

EUT and support equipment was set up on the test bench as per step 9 of the preliminary test.
A scan was taken on both power lines, Line 1 and Line 2, recording at least the six highest emissions.
Emission frequency and amplitude were recorded into a computer in which correction factors were used to calculate the emission level and compare reading to the applicable limit. If EUT emission level was less –2dB to the A.V. limit in Peak mode, then the emission signal was re-checked using Q.P and Average detector.

5.3.5. Test result

The following test mode(s) were scanned during the preliminary test:

Preliminary Conducted Emission Test				
Frequency Range Investigated		150KHz TO 30 MHz		
Mode of operation	Date	Report No.	Data#	Worst Mode
BT Mode	2014-07-31	MTE/SAL/F14070746	LSN51822_1_(L, N)	☒

Then, the EUT configuration and cable configuration of the above highest emission level were recorded for reference of final testing.

Note:

The GFSK Low channel modulation type was the worst case condition, The worse test data was shown on the summary data page.

5.3.5. TEST RESULT OF LINE CONDUCTED EMISSION TEST

Compliance Laboratory
Address:No.5,Langshan 2nd Rd., North Hi-Tech Industrial park
Guangdong ,China
Tel: 0755-86170306 Fax: 0755-86170310

Conducted Emission Measurement

File :LSN51822 Data :#1 Date: 14/07/31/ Time: 9/15/26

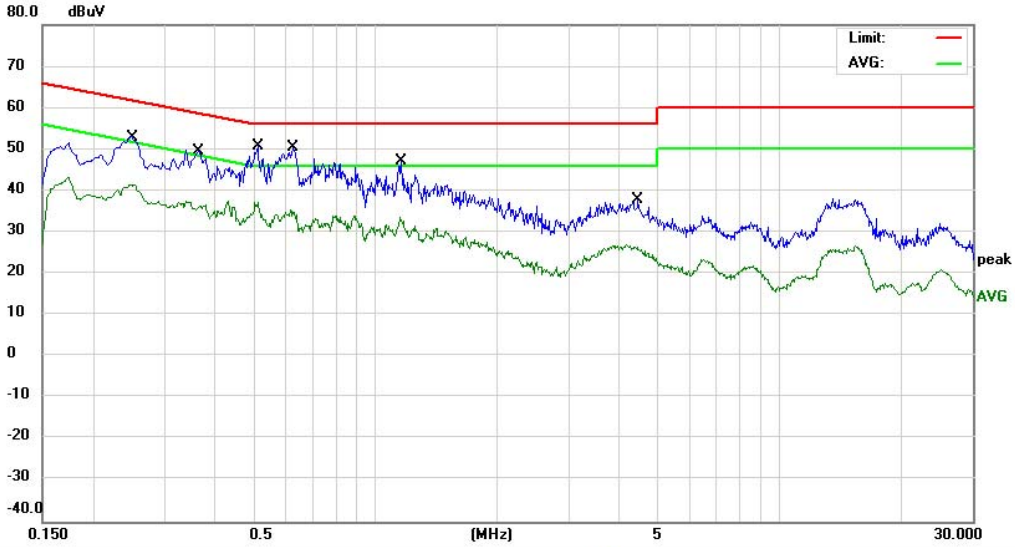

Site site #1 Phase: L1 Temperature: 25
Limit: FCC Part15 B Class B QP Power: DC 3.7V Humidity: 51 %
EUT: Bluetooth LE module
M/N: LSN51822
Mode: BT
Note:

No.	Mk.	Freq.	Reading Level	Correct Factor	Measure-ment	Limit	Over		
		MHz	dBuV	dB	dBuV	dBuV	dB	Detector	Comment
1		0.2540	38.10	11.64	49.74	61.62	-11.88	QP	
2		0.2540	30.09	11.64	41.73	51.62	-9.89	AVG	
3		0.3670	33.40	10.89	44.29	58.57	-14.28	QP	
4		0.3670	24.90	10.89	35.79	48.57	-12.78	AVG	
5	*	0.5147	36.51	10.00	46.51	56.00	-9.49	QP	
6		0.5147	26.00	10.00	36.00	46.00	-10.00	AVG	
7		0.6188	35.35	10.00	45.35	56.00	-10.65	QP	
8		0.6188	23.31	10.00	33.31	46.00	-12.69	AVG	
9		1.1560	31.56	9.84	41.40	56.00	-14.60	QP	
10		1.1560	21.23	9.84	31.07	46.00	-14.93	AVG	
11		4.4846	19.39	11.48	30.87	56.00	-25.13	QP	
12		4.4846	13.71	11.48	25.19	46.00	-20.81	AVG	

*:Maximum data x:Over limit !:over margin

Engineer Signature:

Compliance Laboratory
Address:No.5,Langshan 2nd Rd., North Hi-Tech Industrial park
Guangdong ,China
Tel: 0755-86170306 Fax: 0755-86170310

Conducted Emission Measurement

File :LSN51822 Data :#2 Date: 14/07/31/ Time: 9/11/26

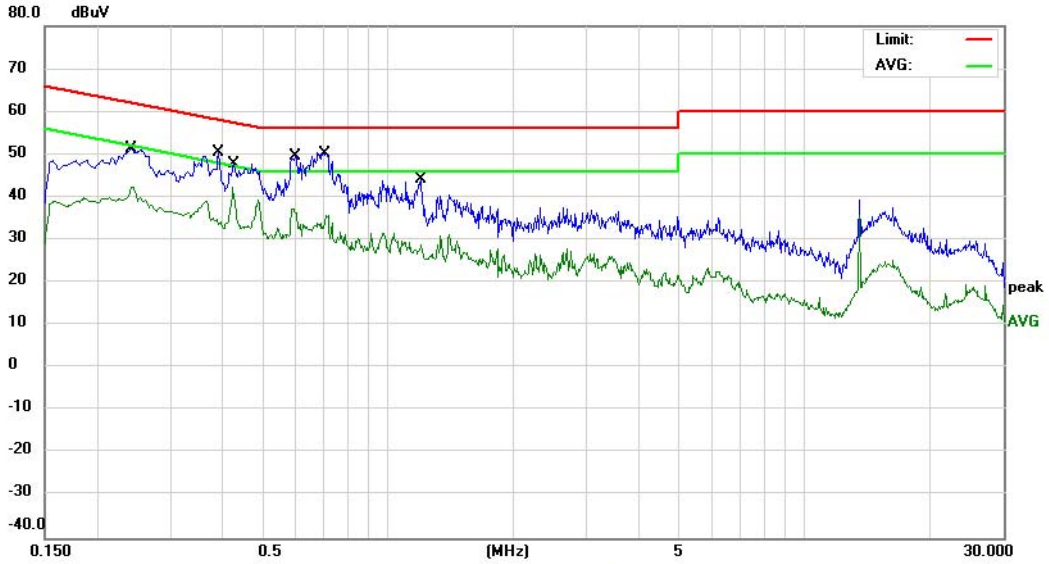

Site site #1 Phase: N Temperature: 25
Limit: FCC Part15 B Class B QP Power: DC 3.7V Humidity: 51 %
EUT: Bluetooth LE module
M/N: LSN51822
Mode: BT
Note:

No.	Mk.	Freq.	Reading Level	Correct Factor	Measure-ment	Limit	Over		
		MHz	dBuV	dB	dBuV	dBuV	dB	Detector	Comment
1		0.2428	36.45	11.71	48.16	62.00	-13.84	QP	
2	*	0.2428	29.83	11.71	41.54	52.00	-10.46	AVG	
3		0.3956	31.70	10.70	42.40	57.94	-15.54	QP	
4		0.3956	23.39	10.70	34.09	47.94	-13.85	AVG	
5		0.4323	29.64	10.45	40.09	57.21	-17.12	QP	
6		0.4323	23.38	10.45	33.83	47.21	-13.38	AVG	
7		0.5982	33.77	10.00	43.77	56.00	-12.23	QP	
8		0.5982	22.56	10.00	32.56	46.00	-13.44	AVG	
9		0.7161	29.79	10.00	39.79	56.00	-16.21	QP	
10		0.7161	21.11	10.00	31.11	46.00	-14.89	AVG	
11		1.2018	34.21	9.80	44.01	56.00	-11.99	QP	
12		1.2058	18.92	9.79	28.71	46.00	-17.29	AVG	

*:Maximum data x:Over limit !:over margin

Engineer Signature:

5.4 20 dB Bandwidth

5.4.1 Definition

Intentional radiators operating under the alternative provisions to the general emission limits, as Contained in §§15.217 through 15.257 and in sub-part E of this part, must be designed to ensure that the 20 dB Bandwidth of the emission, or whatever bandwidth may otherwise be specified in the specific Rule section under which the equipment operates, is contained within the frequency band designated in the rule section under which the equipment is operated.

5.4.2 Block Diagram Of Test Setup

The EUT is powered by the Battery, is coupled to the Spectrum Analyzer (SA) through the Attenuator/DC Block. The path loss as the factor is calibrated to correct the reading. During the measurement, the EUT is activated and is set to operate at maximum power. The RF load attached to the EUT antenna terminal is 50Ohm.

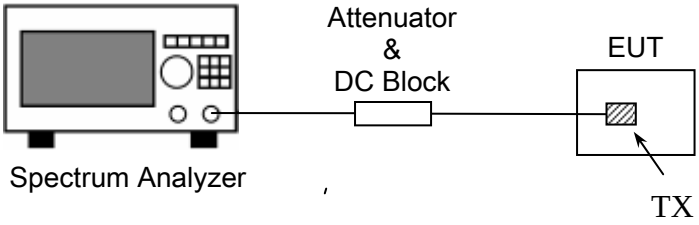

5.4.3 Test Result

GFSK Modulation test result:

Channel	Frequency (MHz)	Test Result(MHz)
0	2402	1.107
19	2440	1.108
39	2480	1.105

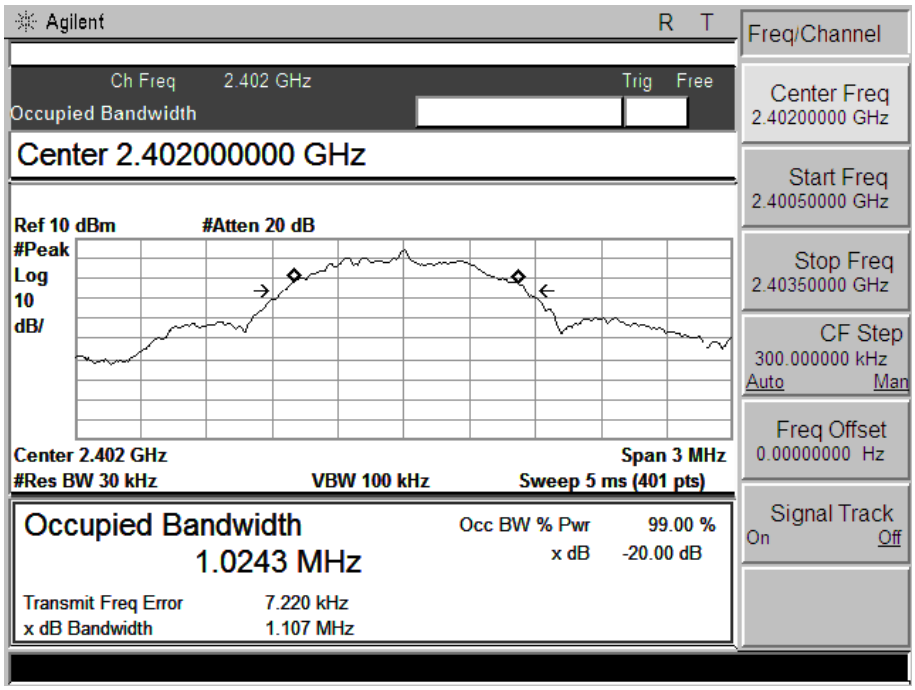

CH Low

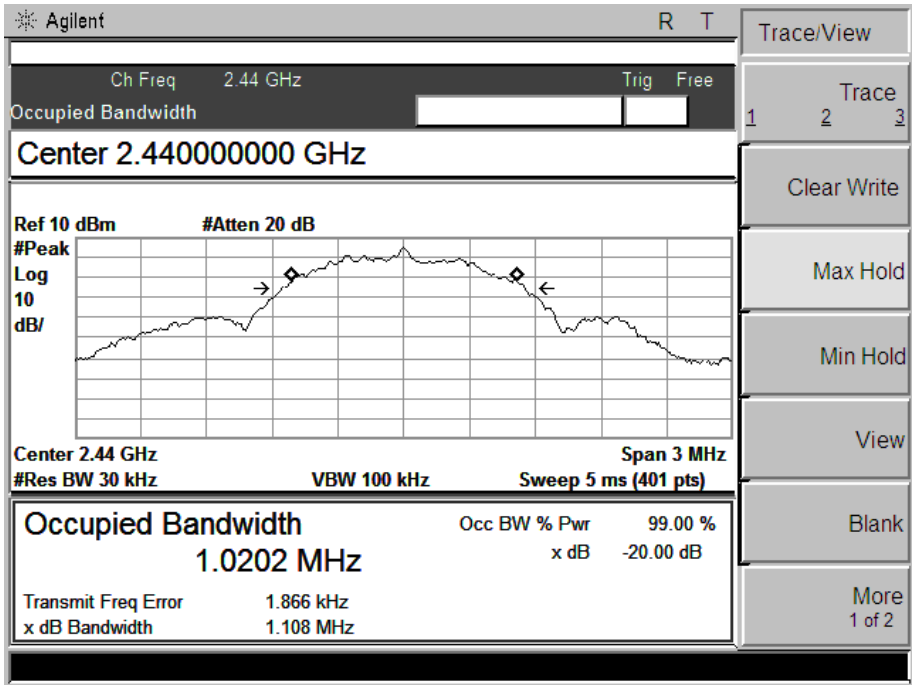

CH MID

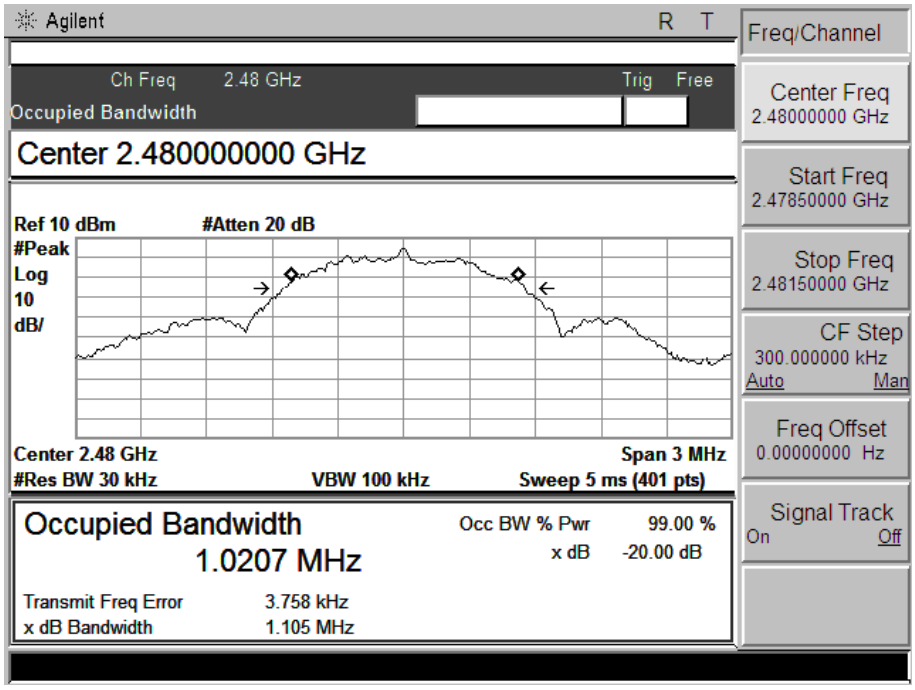

CH High

5.4 Antenna Requirement

5.4.1 Definition

An intentional radiator shall be designed to ensure that no antenna other than that furnished by the responsible party shall be used with the device, An analysis of the EUT was performed to determine compliance with FCC Section 15.203. This section requires specific handling and control of antennas used for devices subject to regulations.

5.4.2 Evaluation Criteria

Section 15.203 of the rules states that the subject device must meet at least one of the following criteria:

(a) Antenna must be permanently attached to the unit.

(b) Antenna must use a unique type of connector to attach to the EUT.

(c) Unit must be professionally installed. Installer shall be responsible for verifying that the correct antenna is employed with the unit.

5.4.3 Evaluation Results

The antenna used in this product is PCB antenna. The antenna is permanently attached. It is inaccessible to the user.

The EUT is therefore compliant with the regulation.

APPENDIX 1
PHOTOGRAPHS OF TEST SETUP

CONDUCTED TEST SETUP

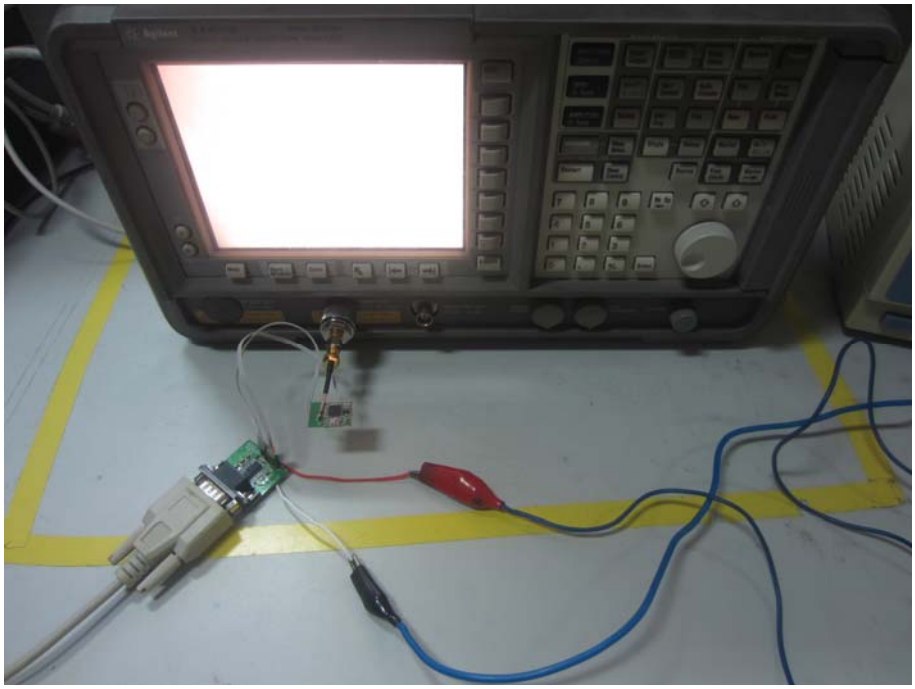

CE TEST SETUP

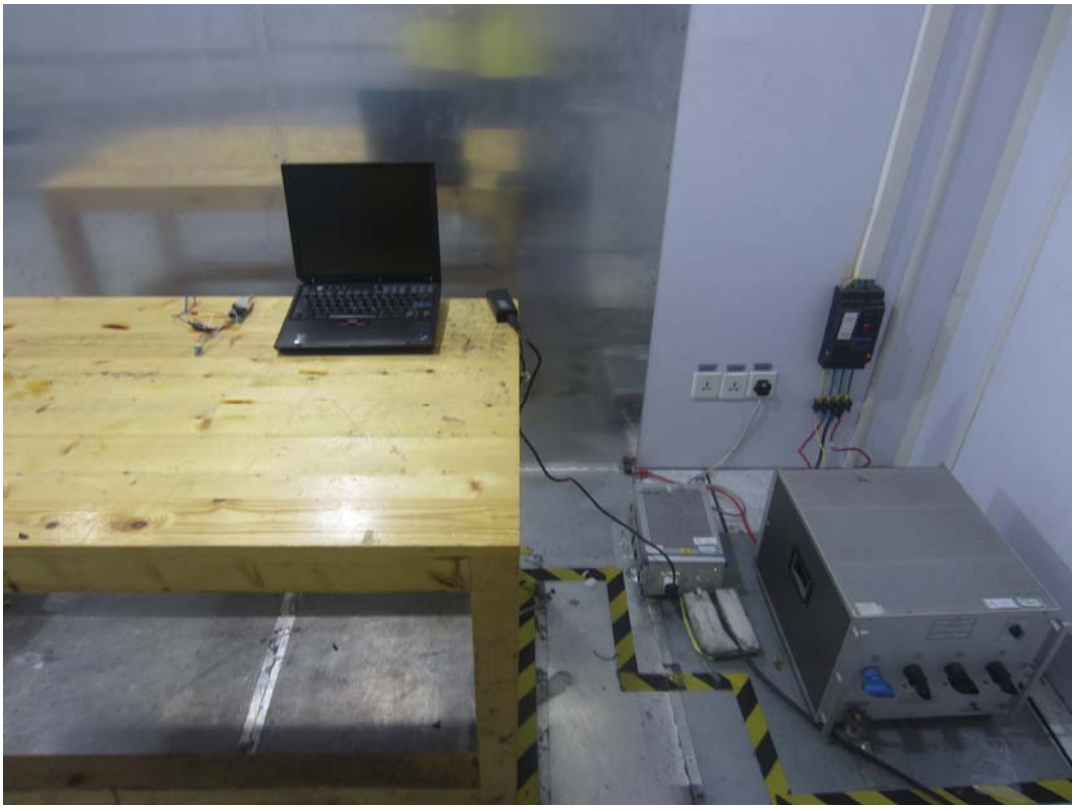

RE TEST SETUP

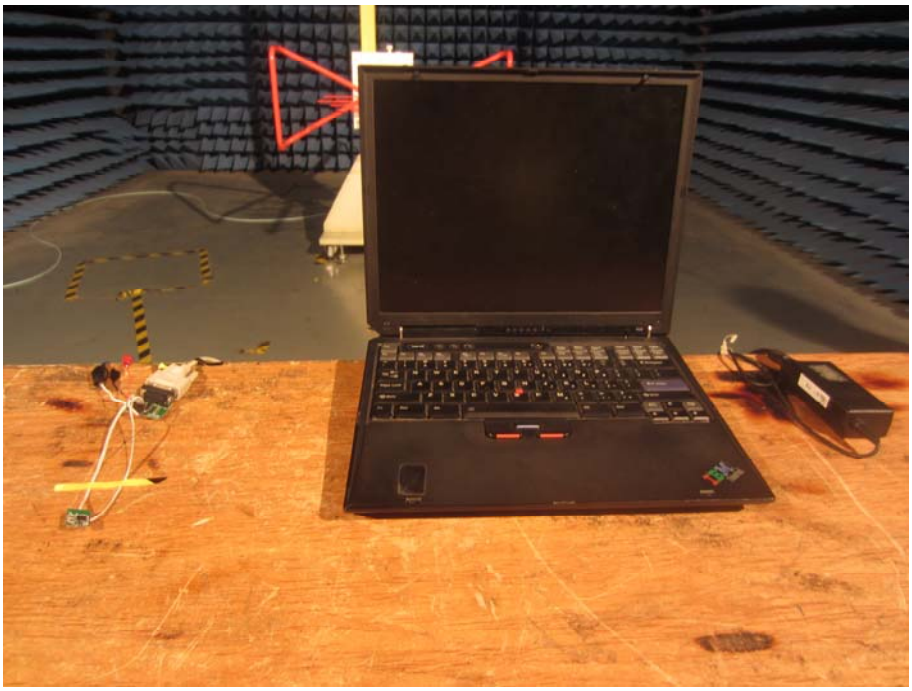

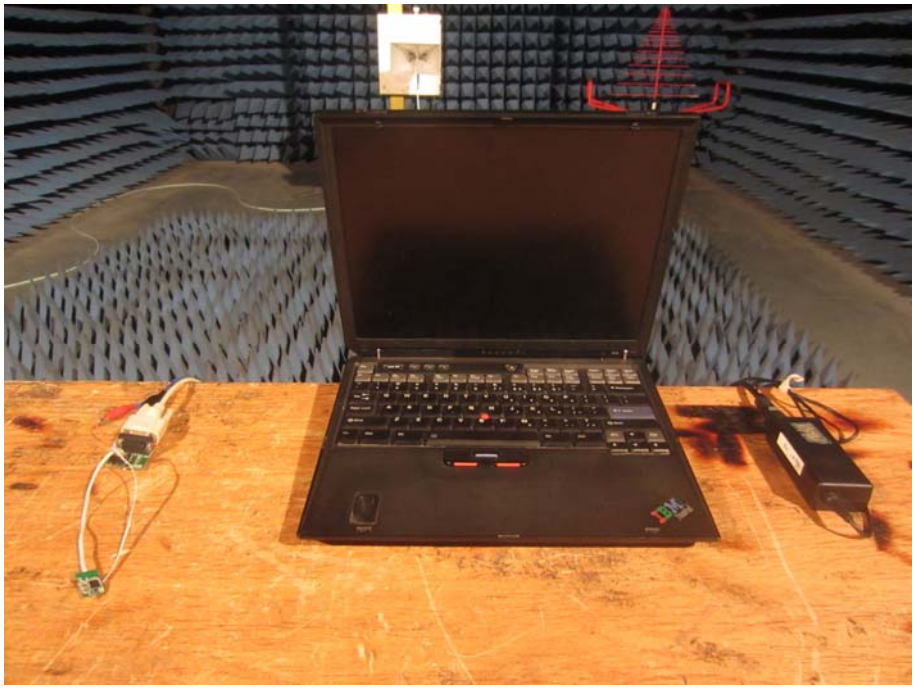

------END OF REPORT------