LiSeng technology ltd.

Li Seng Wireless MCU Solution

Bluetooth Low Energy (BLE) Module

LSN51822

User Manual / User Guide

Jun, 2014

Bluetooth Low Energy Module : LSN51822 Specification

Overview

LSN51822 Bluetooth Low Energy (BLE) Module has developed by LI SENG Technology Ltd.
It's built in Nordic nRF51822 chip to achieve Bluetooth Core Specification for Low Energy - Single Mode Design.
Up to date , it can support Nordic SoftDevices S110 or S120 for Slave and Master Mode respectively.

Li Seng provided LSN51822 without module programming and it's target for customer own development. If customer require module programming , Firmware Development, Test Jig Development…etc. please contact for details.

LSN51822

Features

LSN51822 provide Ultra Low Power Consumption base on its' Cortex M0 CPU . It can also work with another proprietary 2.4GHz concurrently.

- Cortex M0 chip set, provide Ultra Low Power Platform
- Support One Chip Solution by using 51822 as Main Controller or work with another MCU since extra hardware requirements…like Scale or Blood Pressure Application…etc.
- Nordic PPI (Programmable Peripheral Interconnect) System to save more power
- Support UART, SPI, TWI, GPIO...etc.
- Pins Swap Ability , provide simple layout of Main PCB.
- Built in 8x 10-bit ADC
- Support Single Mode "Master"or "Slave"Mode*
- Support OTA Firmware Upgrade by DFU

Li Seng Technology Ltd. reserved the right to update and correct the data , information in latest status.

LiSeng technology ltd.

nRF51822 Chip Overview

ULP wireless system-on-chip
The nRF51822 is a powerful multi-protocol single chip solution for ULP wireless applications. It incorporates Nordic's latest best-in-class performance radio transceiver, an ARM Cortex M0 CPU and 256kB flash + 16kB RAM memory. The nRF51822 supports *Bluetooth*® low energy and 2.4 GHz protocol stacks.

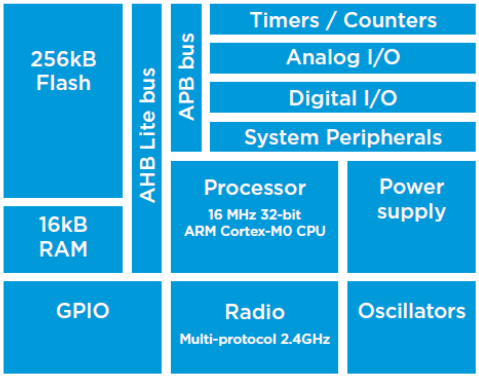

Lower power and higher performance
The nRF51822 uses the 32-bit ARM Cortex M0 MCU, together with extensive flash availability, 256kB in total, with 128kB available for application development. Code density and execution speed are considerably greater than for 8/16-bit platforms. The Programmable Peripheral Interconnect (PPI) system provides a 16-channel bus for direct and autonomous system peripheral communication without CPU intervention. This brings predictable latency times for peripheral to peripheral interaction and power saving benefits associated with leaving the CPU idle. The device has 2 global power modes ON/OFF, but all system blocks and peripherals have individual power management control which allows for an automatic switching RUN/IDLE for system blocks based only on those required/not required to achieve particular tasks.

The new radio forms the basis of the nRF51822's performance. The radio supports *Bluetooth* Low Energy and is on air compatible with the nRF24L-series products from Nordic Semiconductor. Output power is now scalable from a maximum of +4dBm down to -20dBm in 4dB steps. Sensitivity is increased at every level and offers sensitivity ranges (dependent on data rate) from -96 to -85dBm, with -92.5dBm for *Bluetooth* low energy.

KEY FEATURES

- Multi-protocol 2.4GHz radio
- 32-bit ARM Cortex M0 processor
- 256kB flash/16kB RAM
- Software stacks available as downloads
- Pin compatible with other nRF51xxx series devices
- Application development independent from protocol stack
- Fully on-air compatible with nRF24L-series
- Programmable output power from +4dBm to -20dBm
- RSSI
- RAM mapped FIFOs using EasyDMA
- Dynamic on air payload length up to 256 Bytes
- Flexible and configurable 31 pin GPIO
- Programmable Peripheral Interface – PPI
- Simple ON/OFF global power modes
- Full set of digital interfaces including: SPI/2-wire/UART
- 10-bit ADC
- 128-bit AES ECB/CCM/AAR co-processor
- Quadrature demodulator
- Low cost external crystal 16MHz ± 40ppm
- Low power 16MHz crystal and RC oscillators
- Ultra low-power 32kHz crystal and RC oscillators
- Wide supply voltage range (1.8 V to 3.6 V)
- On-chip DC/DC buck converter
- Individual power management for all peripherals
- Package options: 48-pin 6x6 QFN

APPLICATIONS

- Bluetooth Smart applications
- Mobile phone accessories
- Computer peripherals
- CE remote controls for TV, STB and media systems
- Proximity and security alert tags
- Sports- and fitness sensors
- Healthcare and lifestyle sensors
- Game controllers for computers
- Toys and Electronic games
- Domestic/Industrial control and data-acquisition
- Smart RF tags for tracking and social interaction
- Audience response system
- Intelligent domestic appliances

LiSeng technology ltd.

Module Overview

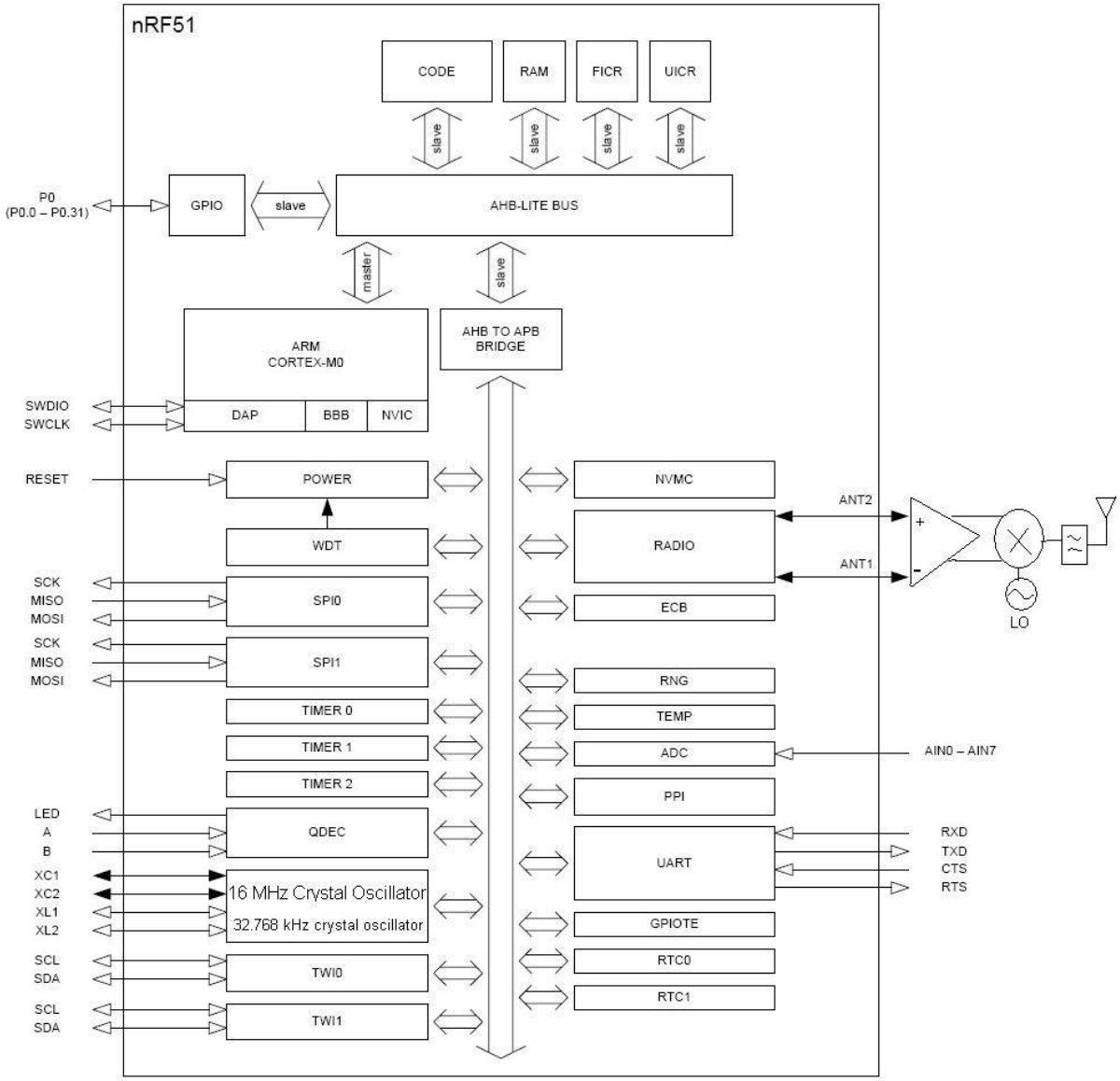

LiSeng technology ltd.

Installation Guide (1/2)

Finished Assembly

1

2

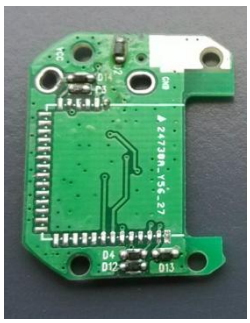

Master PCB (examples)

3

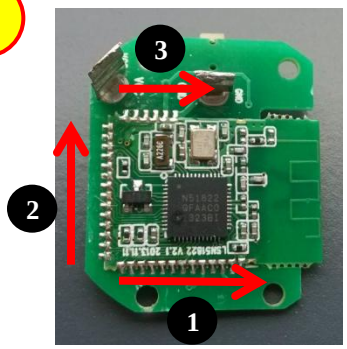

1) Check LSN51822 Module connection pin is clean for soldering.

2) Ready the Master PCB which will connect with LSN51822 Module. Check connection pads is clean for soldering.

3) Place the Module on the Master PCB. Then solder it in sequence :

1 2 3

LiSeng technology ltd.

Installation Guide (2/2)

Finished Assembly

4

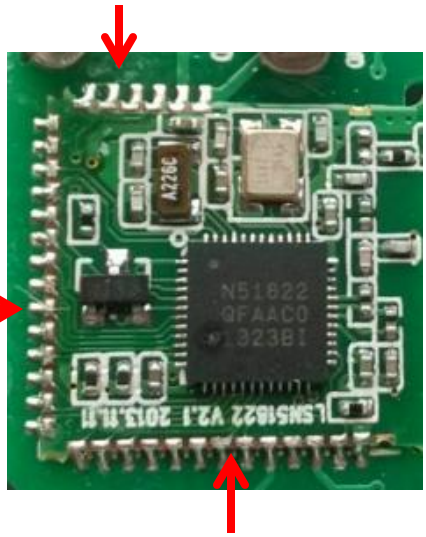

4) After soldering, Check all pads are well connected.

5

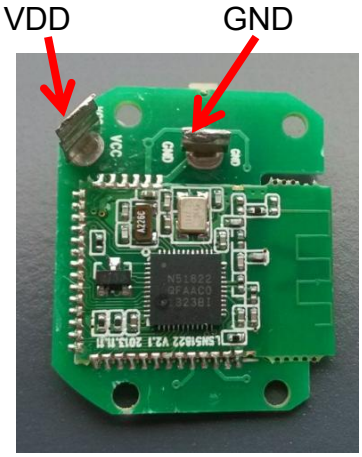

5) Connect DC Power 1.8-3.6V on VDD(Vcc / BAT+) and GND on Master PCB. The Module will work as firmware preloaded.

LiSeng technology ltd.

Pin Name & Dimension

Antenna

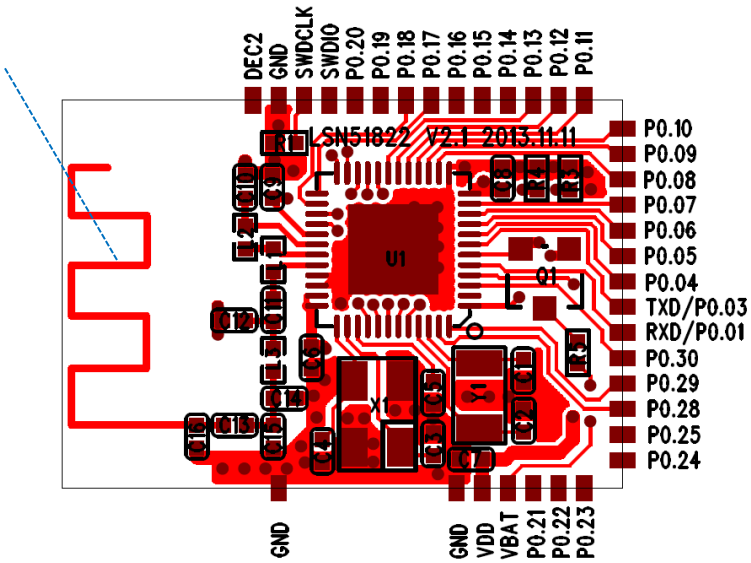

22.0 x 15.2 x (1.8) mm

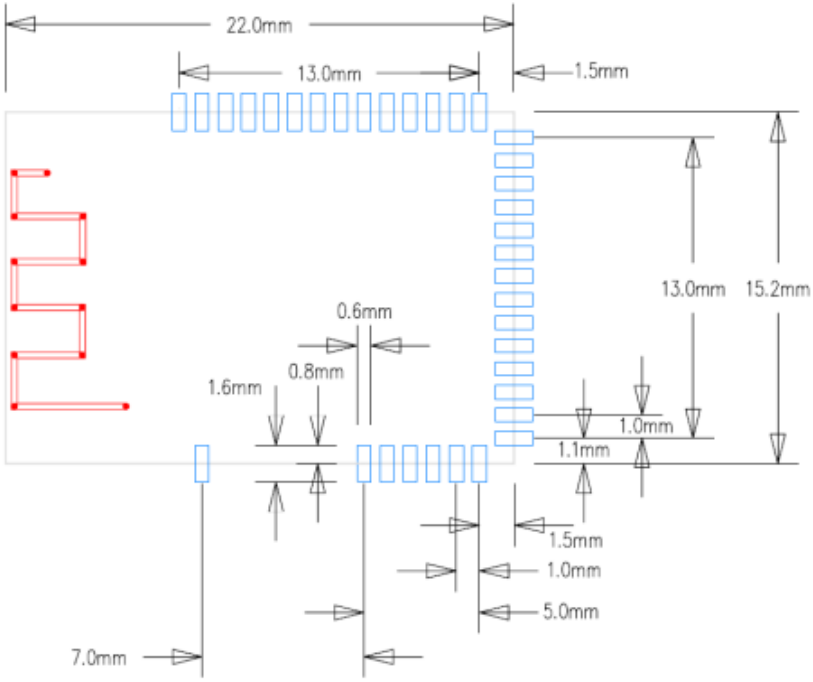

BLE Module Placement Tips

1) To enable DTM mode for R/F Test like BLE fix frequency Test, FCC test…etc., **RXD and TXD** pad require to connect to RF Equipment though RS232.
RXD and TXD pad located on the back side of the module.
Reserve hole at Main PCB for soldering **RXD & TXD** pads for RF Equipment .

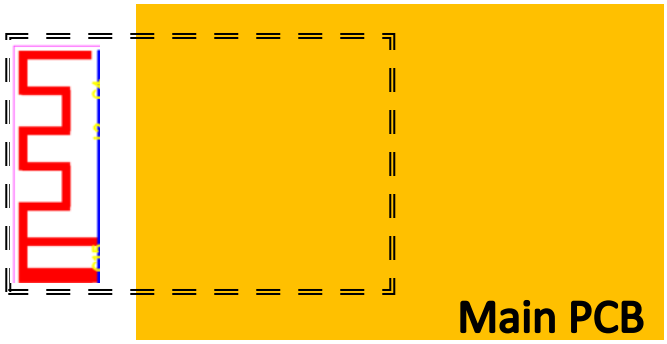

2) Module Soldering on Main PCB, ensure antenna overlap area do NOT cover Main PCB Wiring or Ground area, it's suggested to reserve Min. 5mm apart from Module Antenna.

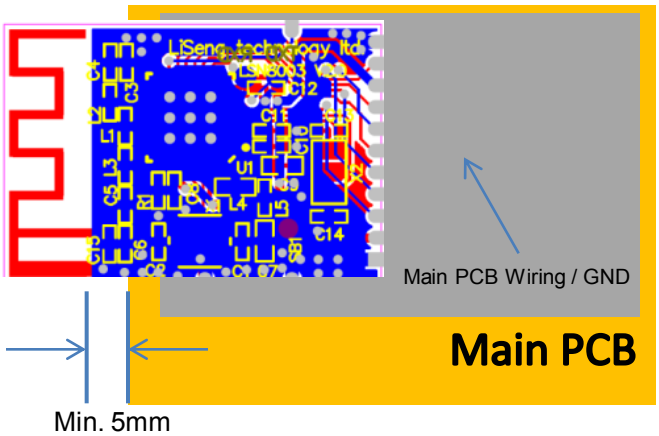

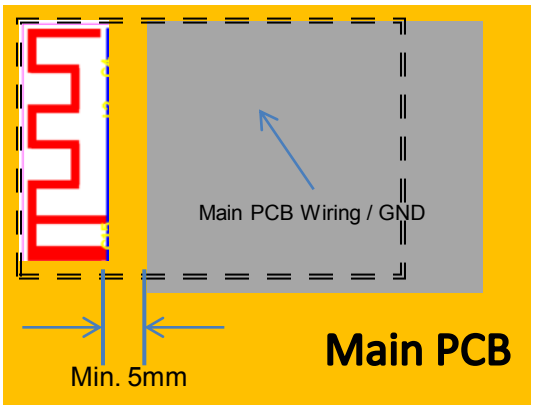

3) Connect All Module Ground Pads to main PCB Ground to obtain better performance.

4) BLE Module (Antenna) placement inside the product, it need to avoid to get close to Metal Part, LCD, Battery…etc. since it's affect the RF performance.

End

FCC Statement:

The final end product must be labeled in a visible area with the following "Contains TX FCC ID:RR3-LSN51822". If the size of the end product is smaller than 8x10cm, then additional FCC part 15.19 stayement is required to be availale in the users manual:

This device complies with part 15 of the FCC Rules. Operation is subject to the following two conditions: (1) This device may not cause harmful interference, and (2) this device must accept any interference received, including interference that may cause undesired operation.

This equipment has been tested and found to comply with the limits for a Class B digital device, pursuant to part 15 of the FCC Rules. These limits are designed to provide reasonable protection against harmful interference in a residential installation. This equipment generates, uses and can radiate radio frequency energy and, if not installed and used in accordance with the instructions, may cause harmful interference to radio communications. However, there is no guarantee that interference will not occur in a particular installation. If this equipment does cause harmful interference to radio or television reception, which can be determined by turning the equipment off and on, the user is encouraged to try to correct the interference by one or more of the following measures:

—Reorient or relocate the receiving antenna.

—Increase the separation between the equipment and receiver.

—Connect the equipment into an outlet on a circuit different from that to which the receiver is connected.

—Consult the dealer or an experienced radio/TV technician for help.

Caution: Any changes or modifications not expressly approved by the party responsible for compliance could void the user's authority to operate the equipment.

FCC Radiation Exposure Statement:

This modular complies with FCC RF radiation exposure limits set forth for an uncontrolled environment. This transmitter must not be co-located or operating in conjunction with any other antenna or transmitter. Due to missing shielding the module is strictly limited to integration by the Grantee himself or his dedicated OEM integrator under control of the Grantee.However, the OEM integrator is still responsible for testing their end-product for any additional compliance requirements required with this module installed.

This device is intended only for OEM integrators under the following conditions:

1)This module is granted as a Limited Modular Approval.

2)This device has been designed to operate with a PCB antenna having a maximum gain of 0dBi.Only this type of antenna may be used.