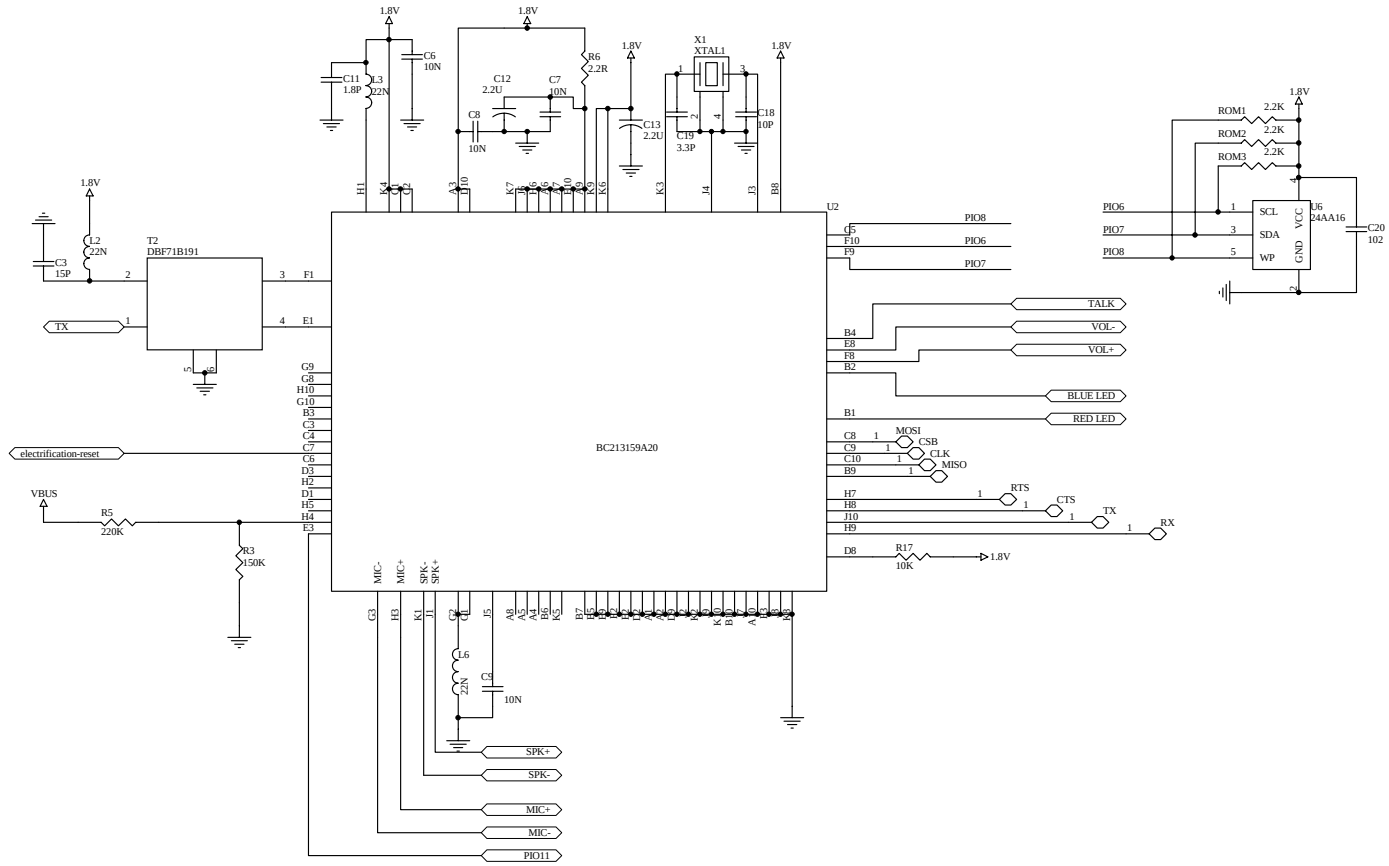

Title		
Size B	Number	Revision
Date: 14-Jul-2006		Sheet of
File: F:\蓝牙耳挂\BTCK005\BTCK005.Ddb		Drawn By:

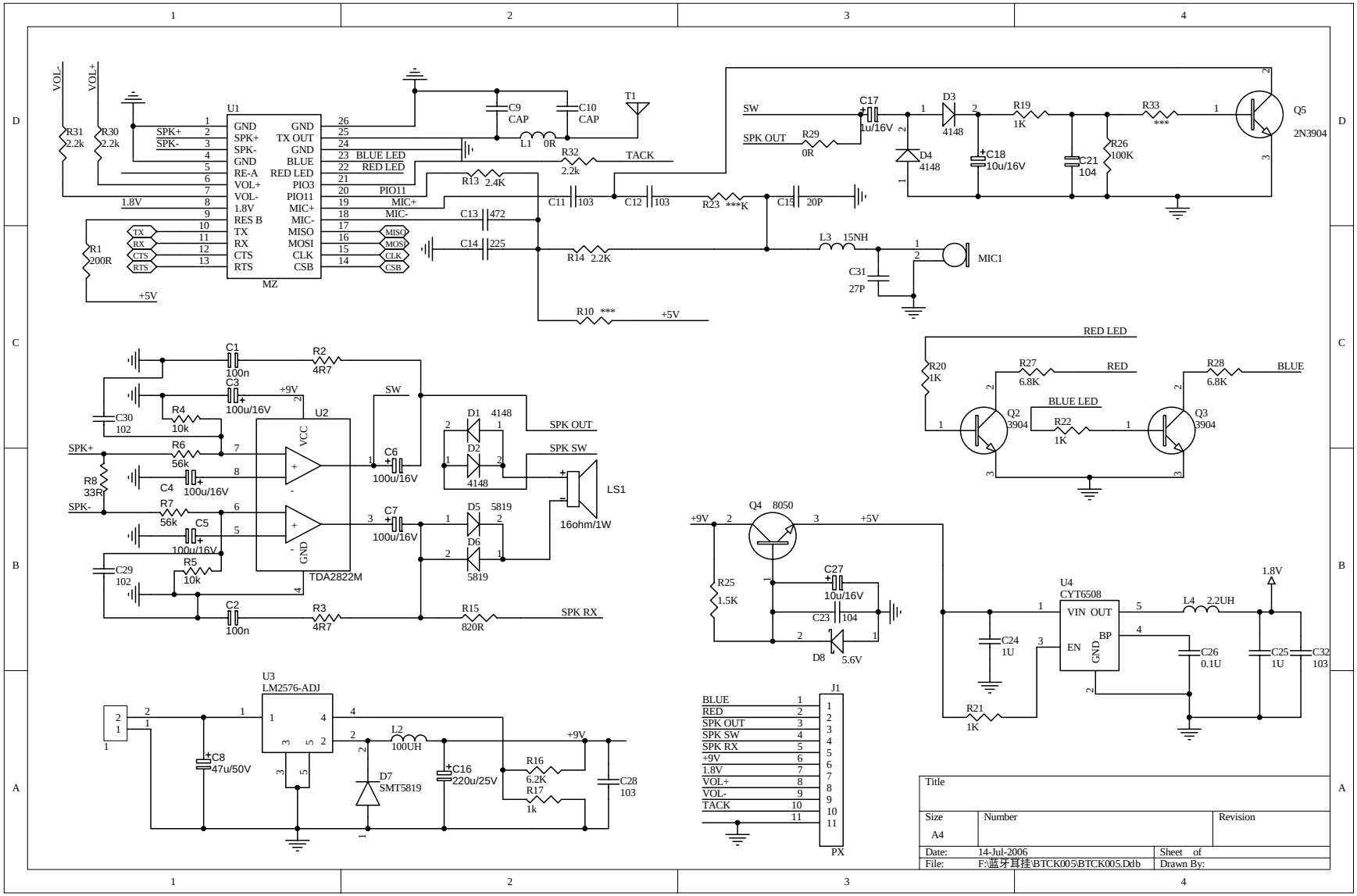
U1
MZ
GND
SPK+
SPK-
GND
RE-A
VOL+
VOL-
1.8V
RES B
TX
RX
CTS
RTS
GND
TX OUT
GND
BLUE
RED LED
PIO3
PIO11
MIC+
MIC-
MISO
MOSI
CLK
CSB
BLUE LED
RED LED
PIO11
MIC+
MIC-
MISO
MOSI
CLK
CSB
VOL-
VOL+
R31 2.2k
R30 2.2k
R1 200R
+5V
C9 CAP
C10 CAP
L1 0R
T1
R32 2.2k
TACK
R13 2.4K
C11 103
C12 103
R23 ***K
C15 20P
C13 472
C14 225
R14 2.2K
R10 ***
+5V
SW
SPK OUT
C17 1u/16V
D3 4148
D4 4148
R29 0R
R19 1K
C18 10u/16V
C21 104
R26 100K
R33 ***
Q5 2N3904
L3 15NH
C31 27P
MIC1
C1 100n
R2 4R7
C3 100u/16V
+9V
U2
TDA2822M
VCC
GND
SW
C30 102
R4 10k
R6 56k
R8 33R
C4 100u/16V
R7 56k
C5 100u/16V
C29 102
R5 10k
C6 100u/16V
C7 100u/16V
D1 4148
D2 4148
D5 5819
D6 5819
SPK OUT
SPK SW
LS1
16ohm/1W
C2 100n
R3 4R7
R15 820R
SPK RX
RED LED
R20 1K
R27 6.8K
RED
R28 6.8K
BLUE
BLUE LED
Q2 3904
R22 1K
Q3 3904
Q4 8050
R25 1.5K
C27 10u/16V
C23 104
D8 5.6V
U4 CYT6508
VIN OUT
EN
BP
GND
C24 1U
L4 2.2UH
C26 0.1U
C25 1U
C32 103
1.8V
R21 1K
U3 LM2576-ADJ
C8 47u/50V
L2 100UH
D7 SMT5819
C16 220u/25V
R16 6.2K
R17 1k
C28 103
J1
PX
BLUE
RED
SPK OUT
SPK SW
SPK RX
+9V
1.8V
VOL+
VOL-
TACK
Title
Size
A4
Number
Revision
Date: 14-Jul-2006
Sheet of
File: F:\蓝牙耳挂\BTCK005\BTCK005.Ddb
Drawn By:

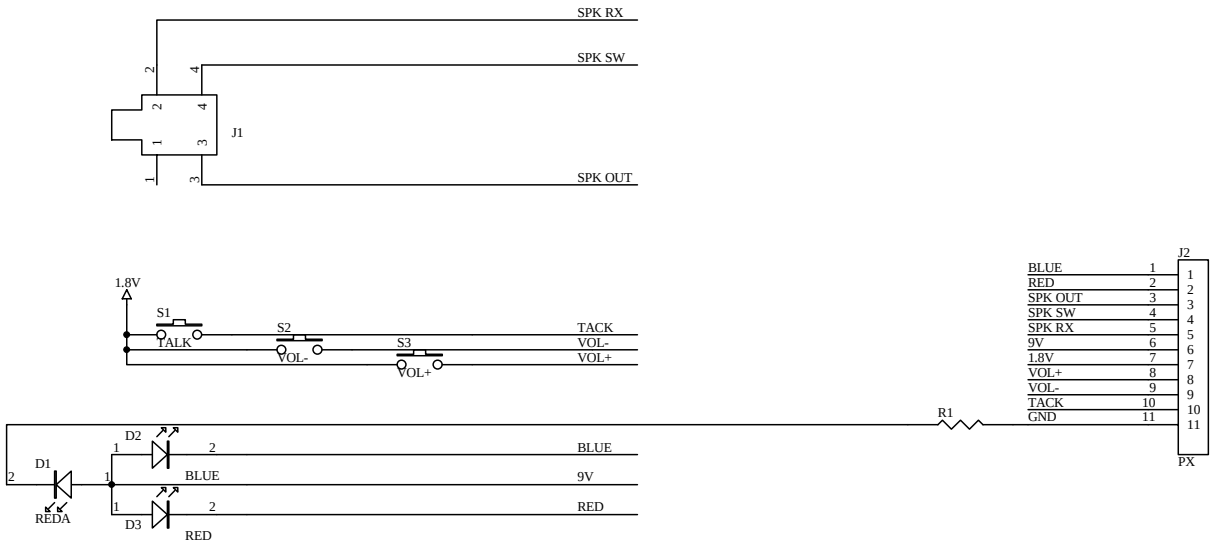

Title		
Size A4	Number	Revision
Date: 14-Jul-2006		Sheet of
File: F:\蓝牙耳挂\BTCK005\BTCK005.Ddb		Drawn By: