DRAFT

Mounting guide

Arming Station Pro

Avigilon Alta Cloud Security

MOTOROLA SOLUTIONS

Important Warnings and Safety Instructions

Avoid exposing the device to shocks, high pressure or temperatures above 40ºC.

Avoid placing the device near fans, ventilation or other noise sources. This will degrade audio performance.

Avoid scratching or leaving fingerprints on the lens, this degrades image quality.

Do not clean the device with harsh detergents or chemicals such as acetone or alcohol. Use a damp microfiber cloth, and if necessary add some drops of dish detergent to the water.

Do not try to repair the unit yourself. Refer all servicing of the device to Avigilon or contact a reseller.

This product should be supplied by a Power over Ethernet (PoE) Power Sourcing Equipment (PSE) compliant to IEEE 802.3af. The PSE should be UL listed and marked “Limited Power Source” or “LPS”. The output should be rated 48V and 15W minimum from the connected port.

The device and the PoE PSE must be installed within the same building, as described by Environment A of the IEEE 802.3af standard. The PoE PSE must be properly grounded.

Ensure that three-prong sockets/plugs are used with PoE Injector power cord to warrant proper grounding. Do not use adapter plugs, two-prong sockets/plugs, or remove the grounding prong from the cable plug.

Avertissements importants et instructions de sécurité

Évitez d'exposer l'appareil à des chocs, à une haute pression ou à des températures supérieures à 40ºC.

Évitez de placer l'appareil à proximité de ventilateurs, de systèmes de ventilation ou d'autres sources de bruit. Cela dégrade les performances audio.

Évitez de rayer la lentille ou d'y laisser des traces de doigts. Cela dégrade la qualité de l'image.

Ne nettoyez pas l'appareil avec des détergents abrasifs ou des produits chimiques comme l'acétone ou l'alcool. Utilisez un chiffon en microfibre humide et ajoutez quelques gouttes de liquide vaisselle à l'eau, au besoin.

N'essayez pas de réparer l'appareil vous-même. Pour tout entretien, adressez-vous à Avigilon ou à un revendeur.

Ce produit doit être alimenté par un équipement d'alimentation électrique par câble Ethernet conforme à la norme IEEE 802.3af. L'équipement d'alimentation doit être homologué UL et porter la mention « Limited Power Source » (Source d'alimentation limitée) ou « LPS ». La sortie doit être de 48 V et 15 W minimum à partir du port connecté.

L'appareil et l'équipement d'alimentation électrique par câble Ethernet doivent être installés dans le même bâtiment, comme décrit par l'environnement A de la norme IEEE 802.3af. L'équipement d'alimentation électrique par câble Ethernet doit être correctement mis à la terre.

Assurez-vous d'utiliser des fiches et des câbles à trois broches avec le cordon d'alimentation de l'injecteur d'alimentation électrique par câble Ethernet pour garantir une mise à la terre adéquate. N'utilisez pas de fiches d'adaptation, de fiches, ni de câbles à deux broches, et ne retirez pas la broche de mise à la terre de la fiche du câble.

Box contents

Arming Station

Wall Bracket
(attached to Arming Station)

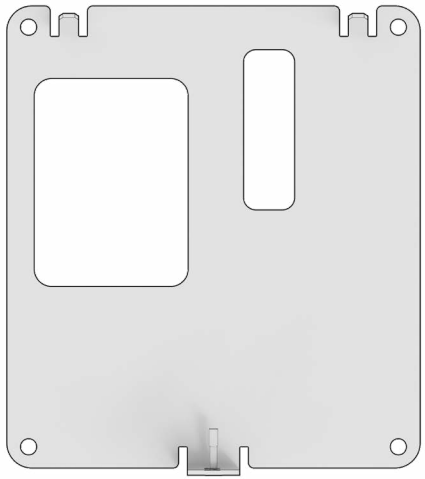

4x Screws
4x Anchors

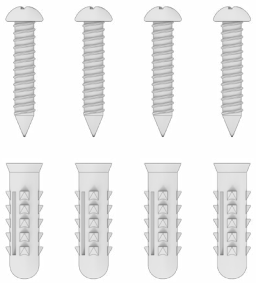

1x Hex tool (2.5mm)

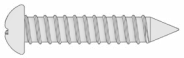

Screw dimensions

Length = 25mm
Dia = 4mm
Type = PH2

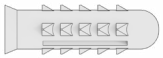

Anchor dimensions

Length = 25mm
Dia = 6mm [1/4"]

Required:

PH 2 screwdriver

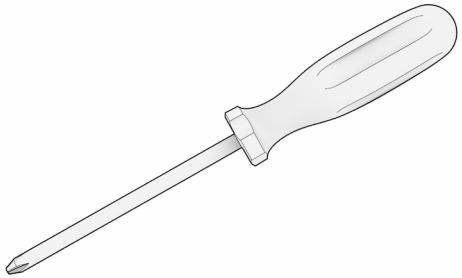

Drill with 6mm drill bit
(1/4 " drill bit)

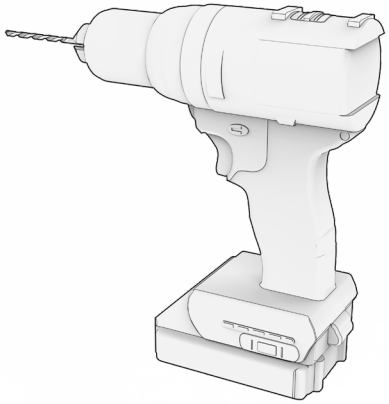

Cable routing alternatives

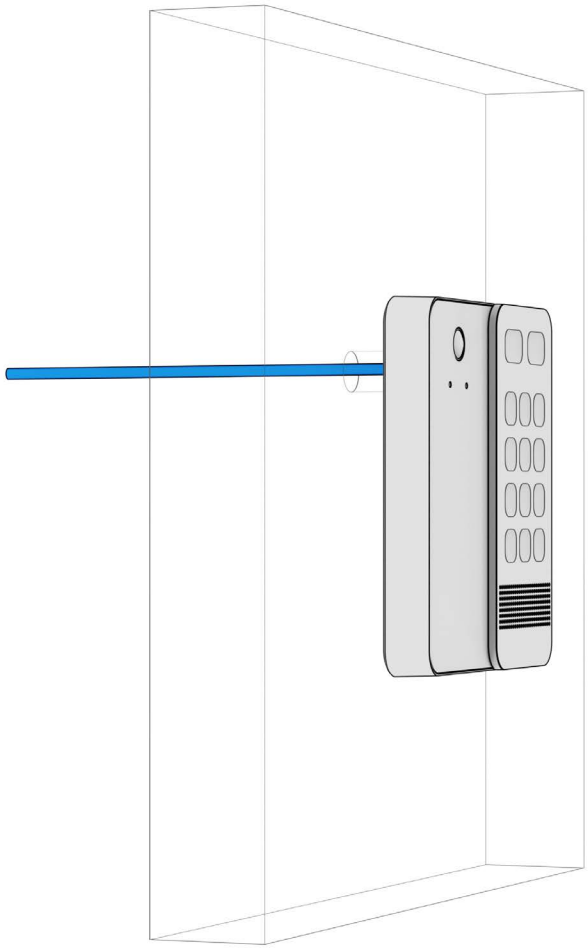

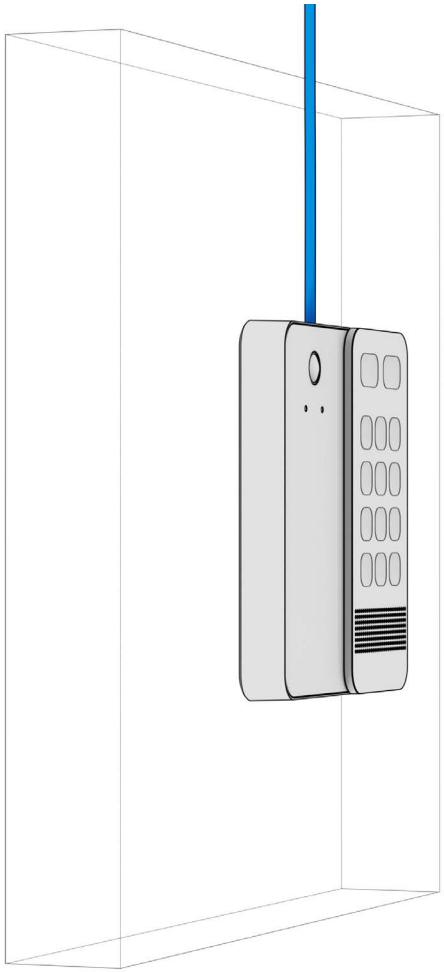

Using the Wall Bracket

1

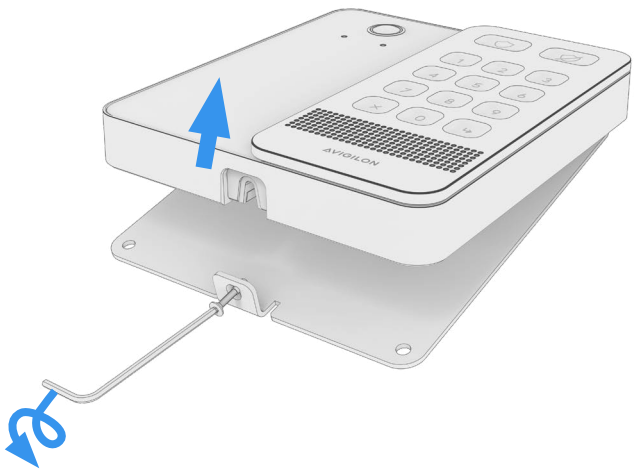

2

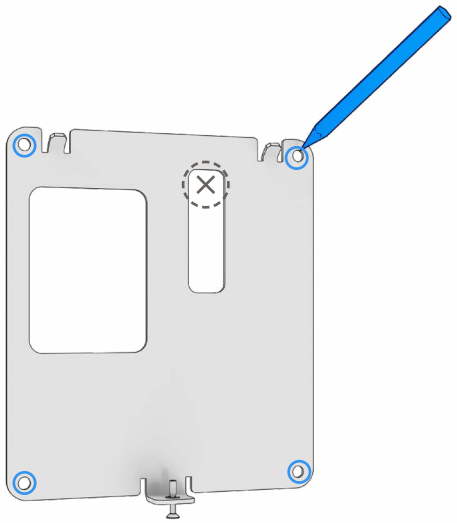

3

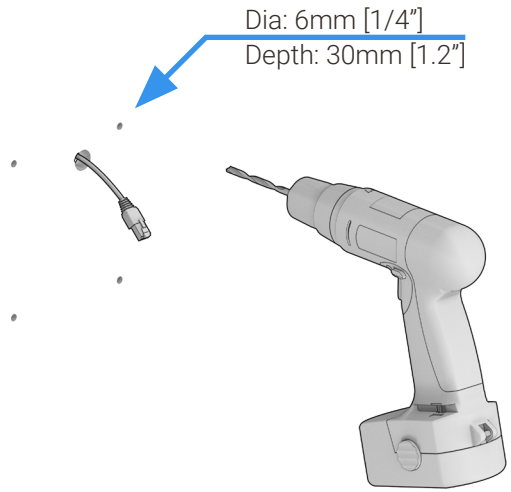

For through the wall cable connection, create the cable opening in location marked ⊗

Fastening the Wall Bracket & routing the ethernet cable

4

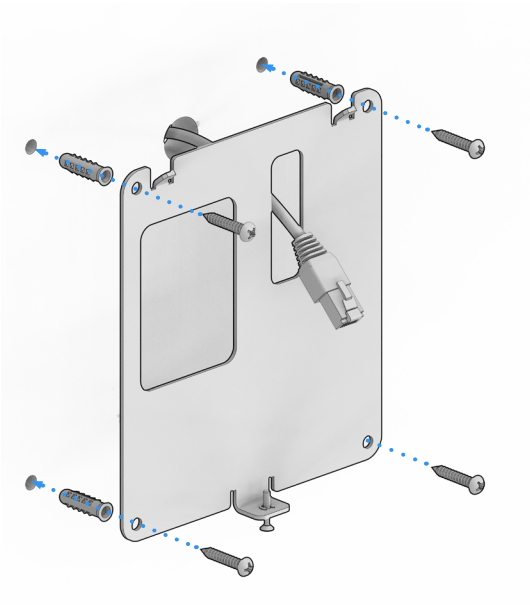

5A

Through the wall cable routing

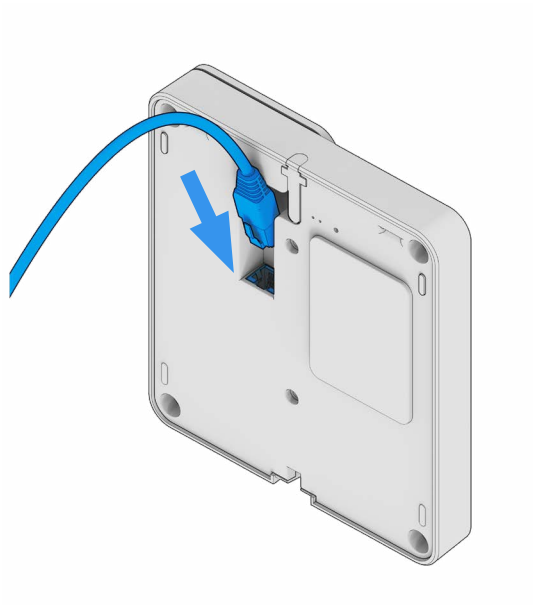

5B

Top entry cable routing

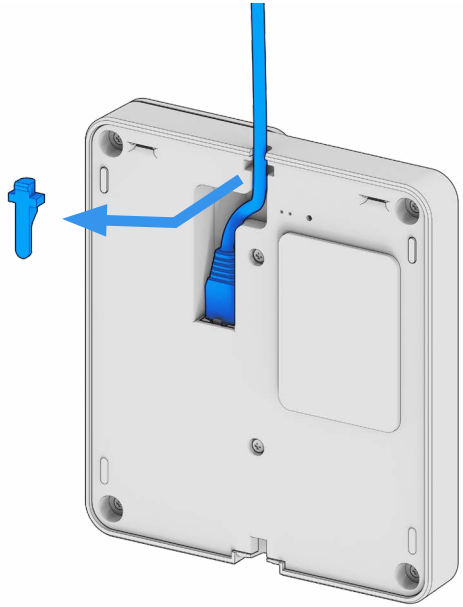

Attaching & Securing Arming Station to the Wall Bracket

6

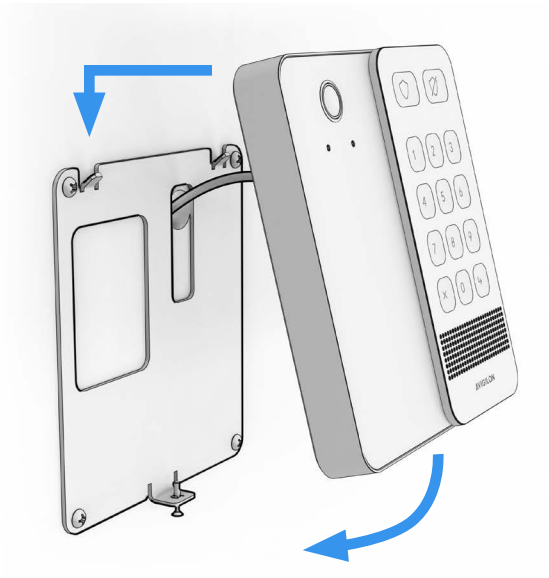

7

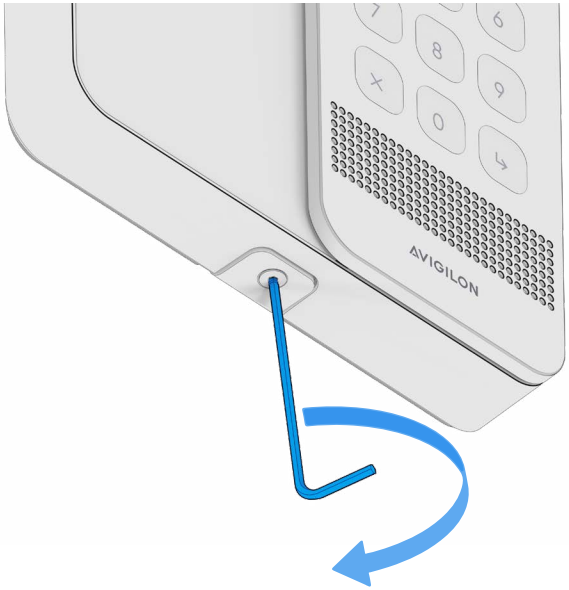

Federal Communication Commission Interference Statement

This device complies with Part 15 of the FCC Rules. Operation is subject to the following two conditions: (1) This device may not cause harmful interference, and (2) this device must accept any interference received, including interference that may cause undesired operation.

NOTE:

This equipment has been tested and found to comply with the limits for a Class A digital device, pursuant to part 15 of the FCC Rules. These limits are designed to provide reasonable protection against harmful interference when the equipment is operate in a commercial environment. This equipment generates, uses, and can radiate radiofrequency energy and, if not installed and used in accordance with the instruction manual, may cause harmful interference to radio communications. Operation of this equipment in a residential area is likely to cause harmful interference in which case the user will be required to correct the interference at his own expense.

FCC Caution:

Any changes or modifications not expressly approved by the party responsible for compliance could void the user's authority to operate this equipment.

This transmitter must not be co-located or operating in conjunction with any other antenna or transmitter.

Radiation Exposure Statement

The product comply with the FCC portable RF exposure limit set forth for an uncontrolled environment and are safe for intended operation as described in this manual. The further RF exposure reduction can be achieved if the product can be kept as far as possible from the user body or set the device to lower output power if such function is available.

Professional installation instruction

1. Installation personal

This product is designed for specific application and needs to be installed by a qualified personal who has RF and related rule knowledge. The general user shall not attempt to install or change the setting.

2. Installation location

The product shall be installed at a location where the radiating antenna can be kept as far as possible from nearby person in normal operation condition to meet regulatory RF exposure requirement.

3. External antenna

Use only the antennas which have been approved by the applicant. The non-approved antenna(s) may produce unwanted spurious or excessive RF transmitting power which may lead to the violation of FCC/IC limit and is prohibited.

4. Installation procedure

Please refer to user's manual for the detail.

5. Warning

Please carefully select the installation position and make sure that the final output power does not exceed the limit set force in relevant rules. The violation of the rule could lead to serious federal penalty.

Industry Canada statement

This device complies with ISED's licence-exempt RSSs. Operation is subject to the following two conditions: (1) This device may not cause harmful interference, and (2) this device must accept any interference received, including interference that may cause undesired operation.

Radiation Exposure Statement:

The product comply with the Canada portable RF exposure limit set forth for an uncontrolled environment and are safe for intended operation as described in this manual. The further RF exposure reduction can be achieved if the product can be kept as far as possible from the user body or set the device to lower output power if such function is available.

Professional installation instruction

1. Installation personal

This product is designed for specific application and needs to be installed by a qualified personal who has RF and related rule knowledge. The general user shall not attempt to install or change the setting.

2. Installation location

The product shall be installed at a location where the radiating antenna can be kept as far as possible from nearby person in normal operation condition to meet regulatory RF exposure requirement.

3. External antenna

Use only the antennas which have been approved by the applicant. The non-approved antenna(s) may produce unwanted spurious or excessive RF transmitting power which may lead to the violation of FCC/IC limit and is prohibited.

4. Installation procedure

Please refer to user's manual for the detail.

5. Warning

Please carefully select the installation position and make sure that the final output power does not exceed the limit set force in relevant rules. The violation of the rule could lead to serious federal penalty.

Déclaration d'Industrie Canada

Le présent appareil est conforme aux CNR d' ISED applicables aux appareils radio exempts de licence. L'exploitation est autorisée aux deux conditions suivantes : (1) le dispositif ne doit pas produire de brouillage préjudiciable, et (2) ce dispositif doit accepter tout brouillage reçu, y compris un brouillage susceptible de provoquer un fonctionnement indésirable.

Déclaration d'exposition aux radiations:

Le produit est conforme aux limites d'exposition pour les appareils portables RF pour les Etats-Unis et le Canada établies pour un environnement non contrôlé.

Le produit est sûr pour un fonctionnement tel que décrit dans ce manuel. La réduction aux expositions RF peut être augmentée si l'appareil peut être conservé aussi loin que possible du corps de l'utilisateur ou que le dispositif est réglé sur la puissance de sortie la plus faible si une telle fonction est disponible.

Instructions d'installation professionnelle

1. Installation

Ce produit est destine a un usage specifique et doit etre installe par un personnel qualifie maitrisant les radiofrequences et les regles s'y rapportant. L'installation et les reglages ne doivent pas etre modifies par l'utilisateur final.

2. Emplacement d'installation

Le produit doit être installé à un endroit où l'antenne rayonnante peut être maintenue aussi loin que possible des personnes à proximité dans des conditions de fonctionnement normales afin de répondre aux exigences réglementaires en matière d'exposition aux RF.

3. Antenn externe.

Utiliser uniiquement les antennes approuvees par le fabricant. L'utilisation d'autres antennes peut conduire a un niveau de rayonnement essentiel ou non essentiel depassant les niveaux limites definis par FCC/IC, ce qui est interdit.

4. Procedure d'installation

Consulter le manuel d'utilisation.

5. Avertissement

Choisir avec soin la position d'nstallation et s'assurer que la puissance de sortie ne depasse pas les limites en vigueur. La violation de cette regle peut conduire a de serieuses penalites federales.

MOTOROLA SOLUTIONS

AVIGILON™

Motorola Solutions, Inc. 500 West Monroe Street, Chicago, IL 60661 U.S.A. **motorolasolutions.com**

MOTOROLA, MOTO, MOTOROLA SOLUTIONS and the Stylized M Logo are trademarks or registered trademarks of Motorola Trademark Holdings, LLC and are used under license. All other trademarks are the property of their respective owners. ©2024 Motorola Solutions, Inc. All rights reserved. 11-2024 [DS02]