SiriusXM™
SATELLITE RADIO

onyX PLUS USER GUIDE

Dock & Play Radio

VEHICLE
KIT INCLUDED

Table of Contents

Compatibility 4

Introduction 5

Features 5
Safety and Care Information 6
What's in the Box? 8
Onyx Plus Functions 9
*Power*Connect Vehicle Dock 10

Vehicle Installation 12

Step 1: Choose a Location for Your Radio 12
Step 2: Install the Adhesive or Vent Mount 14
Step 3: Mount the Magnetic Mount Antenna 18
Step 4: Route the Magnetic Mount Antenna Cable 24
Step 5: Connect the Magnetic Mount Antenna and *Power*Connect Power Adapter 35
Step 6: Connect the Audio 36

Subscribe 45

Using Your Onyx Plus 47

The Main Display 47
Navigation Basics 48
Listening to Satellite Radio 51

Special Features 57

FM Presets 58
Album Art and Enhanced Album Art . 59
Parental Controls 61
TuneMix 66
TuneScan 69
TuneStart 72
Pause & Replay 74
Song/Artist Alerts 76
Game/Score Alerts 81
Sports Ticker 89
SportsFlash 95

Where Else Can You Use Your Onyx Plus? 102

Configuring Your Onyx Plus 103

Radio ID 103
Channel Tuning 104
FM Settings 105
Brightness 110
Audio Level 111
Alerts 112
Parental Controls 112
Feature Settings 112
Parental Controls 114
Signal Indicator 114
Auto Shut Off 115
Factory Settings 116
Demo Mode 119
Using the Vehicle Dock From the Universal Xpress Car Kit 121
Turn FM Transmitter On/Off 122

Troubleshooting 124

Product Specifications 129

Patent and Environmental Information 130

Table of Contents

FCC Statement 131

Copyrights and Trademarks. . . . 132

Owners Record 133

Compatibility

The XDPIV2 Vehicle Dock included with your Onyx Plus is compatible with the AMPS dash and vent mounts included with your Onyx Plus, as well as the T-Slot dash and vent mounts (previously included with Onyx). The AMPS mounting accessories are not compatible with the previous version of the Vehicle Dock, XDPIV1.

The XDPIV2 Vehicle Dock can be identified by a label, and the four AMPS mounting points, both on the rear of the dock.

Rear View

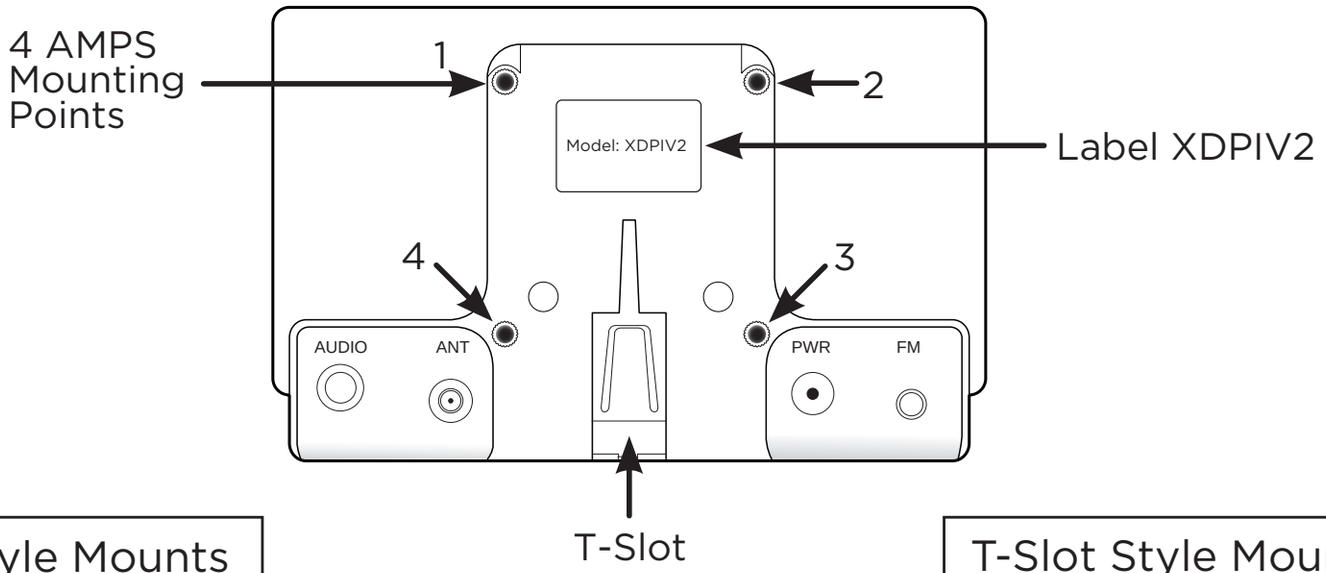

AMPS Style Mounts

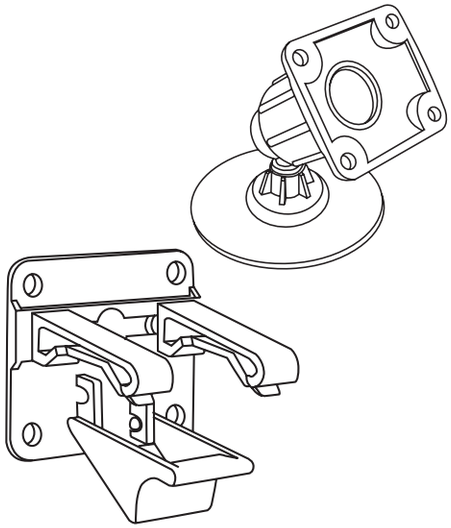

T-Slot Style Mounts

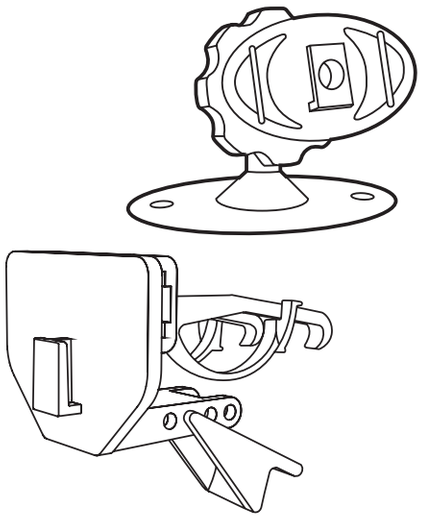

Features

Thank you for purchasing the SiriusXM Onyx Plus with Vehicle Kit!

SiriusXM Onyx Plus has these exciting features to enhance your overall experience:

- View program and channel information on a full color display featuring album art, channel logos and graphics
- Store up to 20 of your favorite channels for one-touch access
- Pause, rewind and replay live satellite radio plus all your Smart Favorite channels
- Start songs from the beginning when you tune to a Smart Favorite music channel with TuneStart™
- Create your own music channel that is a blend of your Smart Favorite music channels with TuneMix™
- Scan and select songs that have already played on your Smart Favorite music channels with TuneScan™
- Enjoy SiriusXM Xtra Channels - 20+ channels of additional music, sports, entertainment and SiriusXM Latino, a collection of Spanish language channels*
- Listen at home, at the office, outdoors, or in additional vehicles - all with just one subscription
- Get alerts so you won't miss any of your favorite artists, songs, games and scores**
- Catch up on the latest sports scores with Sports Ticker™ **
- Browse what's playing on other channels while listening to the current one
- Lock and unlock channels with mature content
- Jump back to the previous channel with One-Touch Jump™
- Access Traffic and Weather Now for the city of your choice with the press of a button
- Hear SiriusXM through your existing vehicle stereo with easy, do-it-yourself installation***
- Includes *Power*Connect™ Vehicle Kit – add optional accessories for your home, outdoors, or even vehicles.
- Store and easily access FM presets to optimize *Power*Connect™ performance
- Works on the XM network

Please read the entire User Guide before Using Your Onyx Plus!

*Access to Xtra channels depends on subscription package. Subscription sold separately.

**Game and Score Alerts, Sports Ticker, and SportsFlash depend on the subscription package, which must include the play-by-play channels of the desired sports leagues. Subscription sold separately.

***Requires an FM stereo or Aux In capability. Use the included Aux In cable if your vehicle has Aux In capability for best performance. Will also work with cassette adapter (sold separately).

Safety and Care Information

IMPORTANT! Self installation instructions and tips are provided for your convenience. It is your responsibility to determine if you have the knowledge, skills, and physical ability required to properly perform an installation. SiriusXM shall have no liability for damage or injury resulting from the installation or use of any SiriusXM or third party products. It is your responsibility to ensure that all products are installed in adherence with local laws and regulations and in such a manner as to allow a vehicle to be operated safely and without distraction. SiriusXM product warranties do not cover the installation, removal or reinstallation of any product.

- Do not expose to extreme temperatures (above 140°F or below -4°F, or above 60°C or below -20°C).
- Do not expose to moisture. Do not use device near or in water. Do not touch the device with wet hands.
- Do not let any foreign matter spill into device.
- Do not store in dusty areas.
- Do not expose to chemicals such as benzene and thinners. Do not use liquid or aerosol cleaners. Clean with a soft damp cloth only.
- Do not expose to direct sunlight for a prolonged period of time, and do not expose to fire, flame, or other heat sources.
- Do not try to disassemble and/or repair device yourself.
- Do not drop your device or subject it to severe impact.
- Do not place heavy objects on device.
- Do not subject device to excessive pressure.
- If the LCD screen is damaged, do not touch the liquid crystal fluid.

Warning!

- Opening the case may result in electric shock.
- If the liquid crystal fluid comes in contact with your skin, wipe the skin area with a cloth and then wash the skin thoroughly with soap and running water. If the liquid crystal fluid comes into contact with your eyes, flush the eyes with clean water for at least 15 minutes and seek medical care. If the liquid crystal fluid is ingested, flush your mouth thoroughly with water. Drink large quantities of water, and induce vomiting. Seek medical care.
- Make sure that you insert the *Power*Connect Power Adapter all the way into the vehicle's cigarette lighter or power adapter socket.
- If you are using *Power*Connect as your audio connection option, it is advisable not to insert a multi-outlet adapter into the same vehicle cigarette lighter or power adapter socket to simultaneously power other devices. Some multi-outlet adapters can prevent the *Power*Connect feature from working properly.
- When using this product, it is always important to keep your eyes on the road and hands on the steering wheel. Not doing so could result in personal injury, death, and/or damage to your device, accessories, and/or to your vehicle or other property.
- Vehicle installation, service activation, and Radio configuration functions should not be performed while driving. Park your vehicle in a safe location before beginning installation.
- This product contains chemicals known to the State of California to cause cancer and birth defects or other reproductive harm.

Your device should be placed in your vehicle where it will not interfere with the function of safety features, e.g., deployment of airbags. Failure to correctly place device may result in injury to you or others, if the unit becomes detached during an accident and/or obstructs the deployment of an airbag.

What's in the Box?

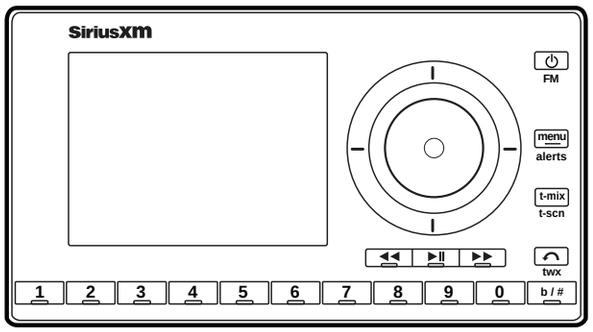

Onyx Plus Radio

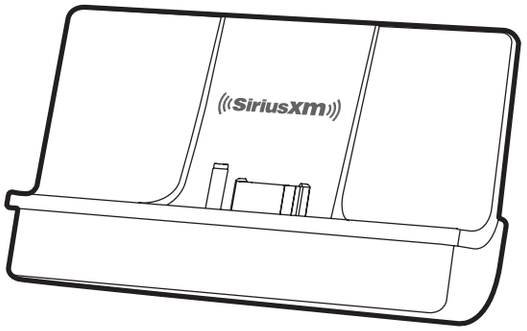

*Power*Connect™ Vehicle Dock

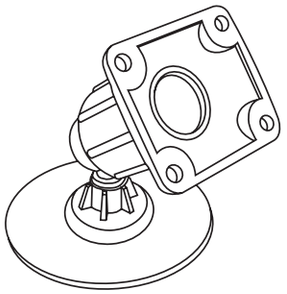

Dash Mount

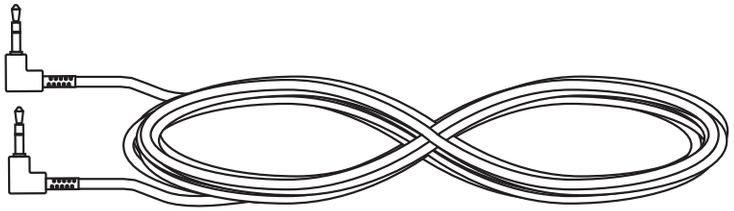

Aux In Cable

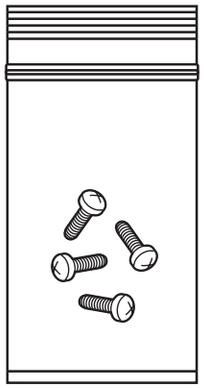

Screws (4)

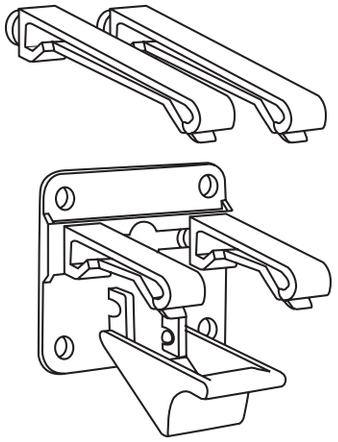

Vent Mount and
Extended Vent Clamps

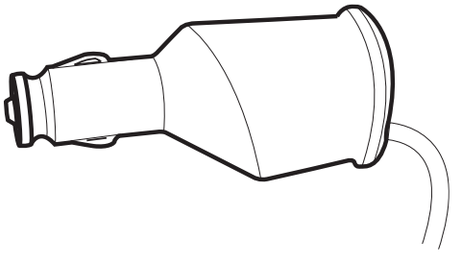

*Power*Connect Power
Adapter

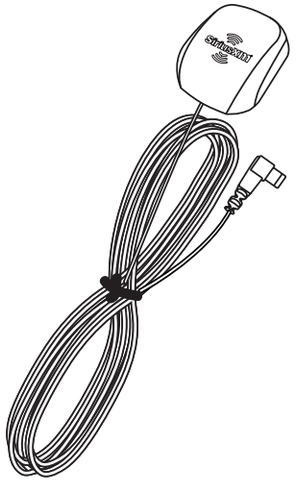

Magnetic Mount
Antenna

Antenna & Dash Mount
Alcohol Preparation Pads

Onyx Plus Functions

Up and Down Buttons
Press to preview and tune to channels through the channel lineup; also press to scroll through lists and highlight items in lists.

Left and Right Buttons
Press to search for channels by category.

Power/FM Button
Press to turn Radio on and off; **Press and hold** to quickly access FM channel presets.

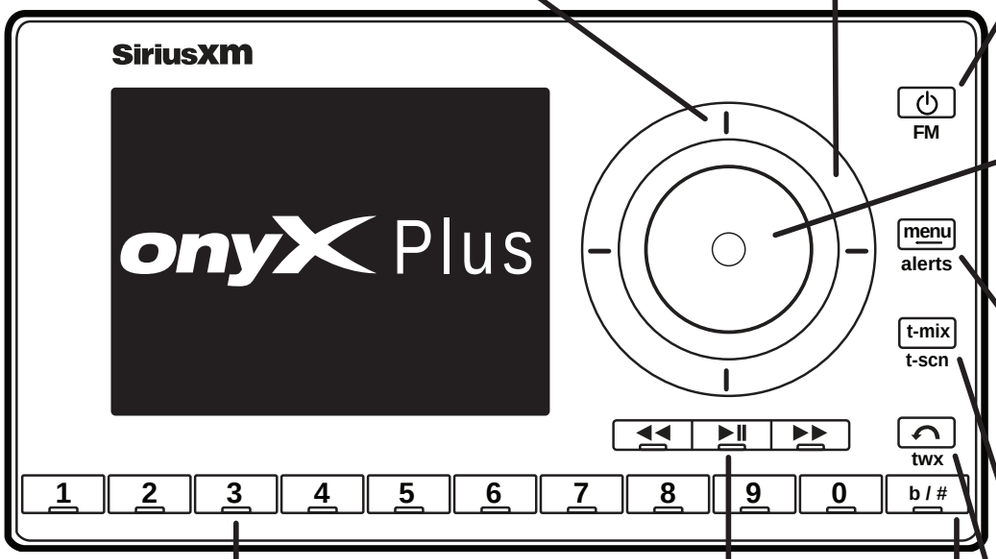

Select Button
When in a menu or list, **press** to confirm selection of highlighted item; when in TuneMix or TuneScan, **press** to end TuneMix/Scan and continue playing the currently tuned channel, or **press and hold** to end Tune Mix/Scan and return to the previously tuned channel.

Menu/Alerts Button
Press to access advanced features and configuration options; when in configuration options, press and hold to return to main display screen; **Press and hold** to save a Song, Artist, or Game alert.

TuneMix/TuneScan Button
Press to begin TuneMix; **Press and hold** to begin TuneScan.

Jump/Traffic Weather Button
Press to go back to the previous channel to which you were listening; **Press and hold** to directly access traffic and weather for the city of your choice.

Number Buttons
Press to tune to a stored favorite channel; **Press and hold** to store a favorite channel. Also used to enter channel numbers when the Direct button is pressed.

Channels stored in buttons **1 - 9** in banks A & B are smart favorites used for enhanced pause and replay, and for advanced music features TuneStart, TuneMix, and TuneScan.

Channels stored in button **0** in banks A & B are regular favorites.

Pause and Replay Buttons
Pause, rewind, and replay live radio and smart favorite channels.

Banks/Direct Button
Press to switch between favorite channel banks (A/B); **Press and hold** to enter a channel number using the number buttons and directly tune to the channel.

*Power*Connect Vehicle Dock

Color-Coded Connections

The color-coded *Power*Connect Vehicle Dock makes it simple to connect. Just match the colors on the cable ends to the colors on the dock to see what goes where.

Rear View

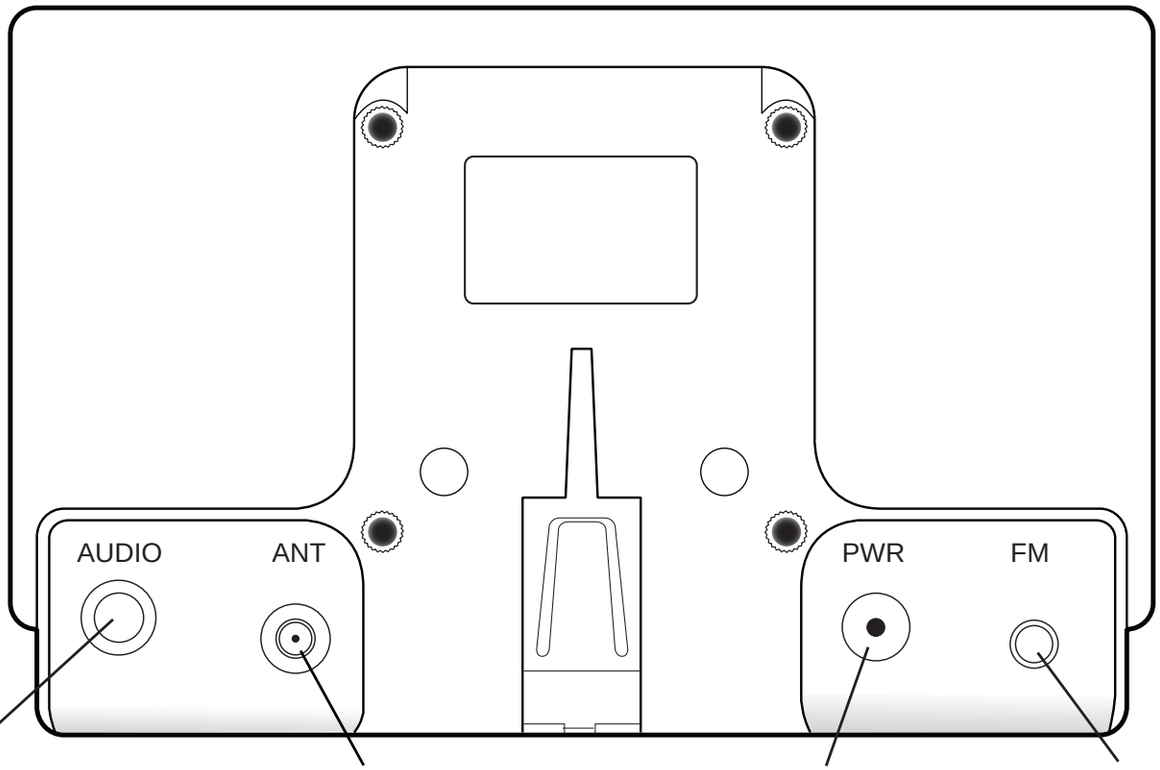

AUDIO (Green) Connection for Aux In Cable or optional Cassette Adapter (sold separately).

ANT (Silver) Connection for the Magnetic Mount Antenna.

PWR (Red) Connection for *Power*Connect Power Adapter.

FM (Blue) Connection for optional FM Direct Adapter (sold separately).

Wire Guide

The *Power*Connect Vehicle Dock has a wire guide at the top rear that can help you to organize the cables and wires connected to the dock. If you need to bring a cable or wire from one side of the dock to the other, utilize the wire guide by looping the cable though the wire guide as shown.

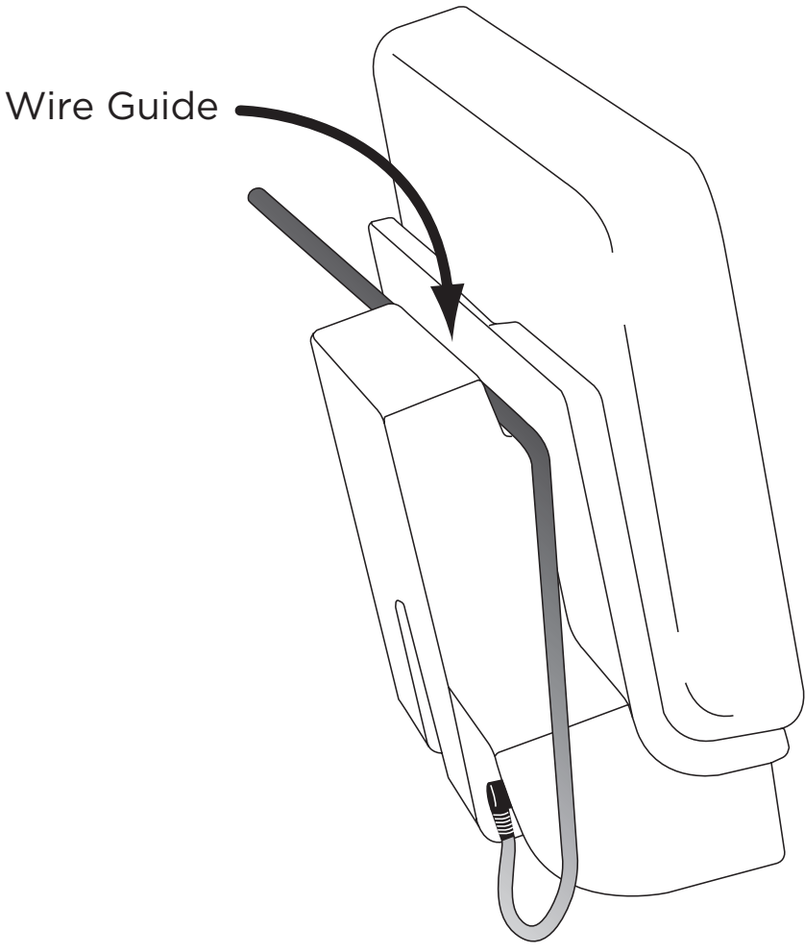

WARNING! DO NOT attempt to install Onyx Plus while driving. Park your vehicle in a safe location before beginning installation.

Step 1: Choose a Location for Your Radio

When installing Onyx Plus in your vehicle, choose a location where it will not block your vision, interfere with the controls, or obstruct the air bag. The location should be easily accessible and provide good visibility of the display, and should not be located where it will be in direct sunlight, which will affect the visibility of the display screen.

Several examples of Onyx Plus mounted in a vehicle are shown: **A** is the on dash method using the Adhesive Mount, and **B** is the vent clip method using the Vent Mount.

Option 1

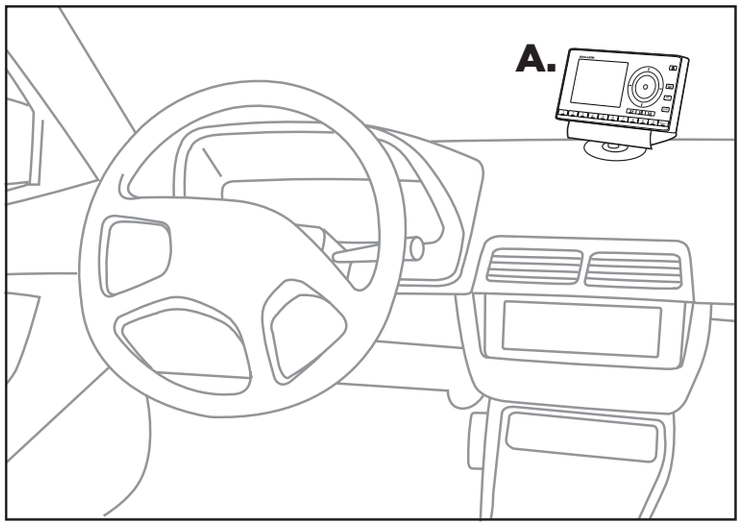

Option 2

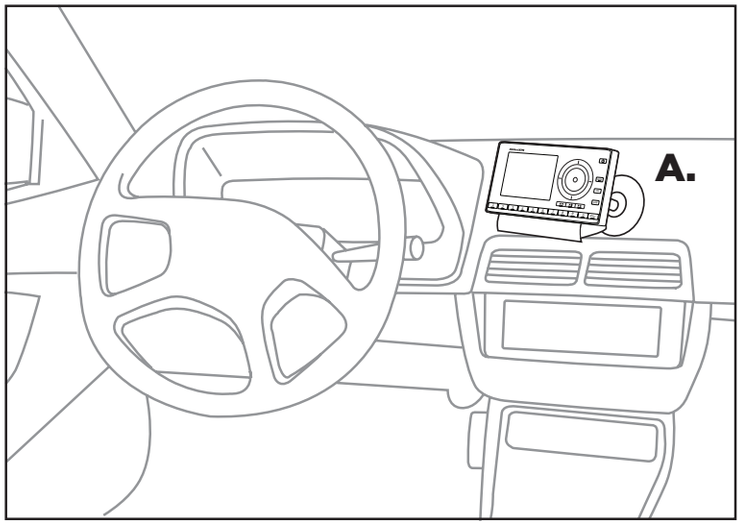

Option 3

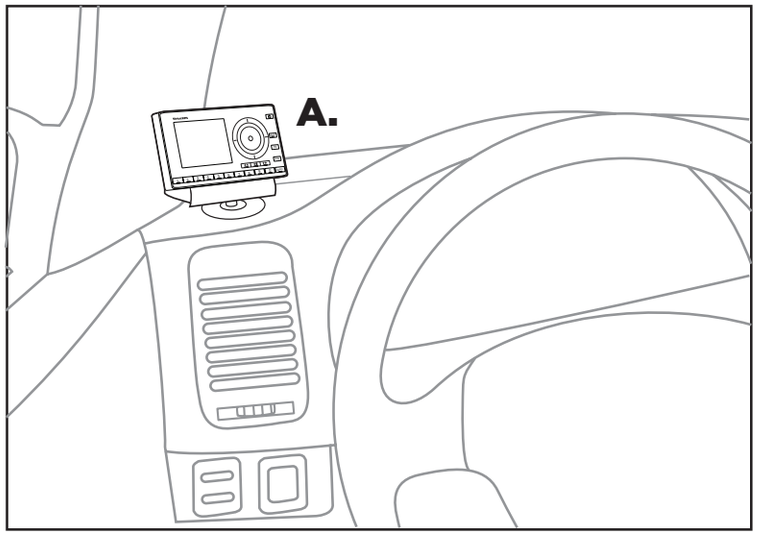

Option 4

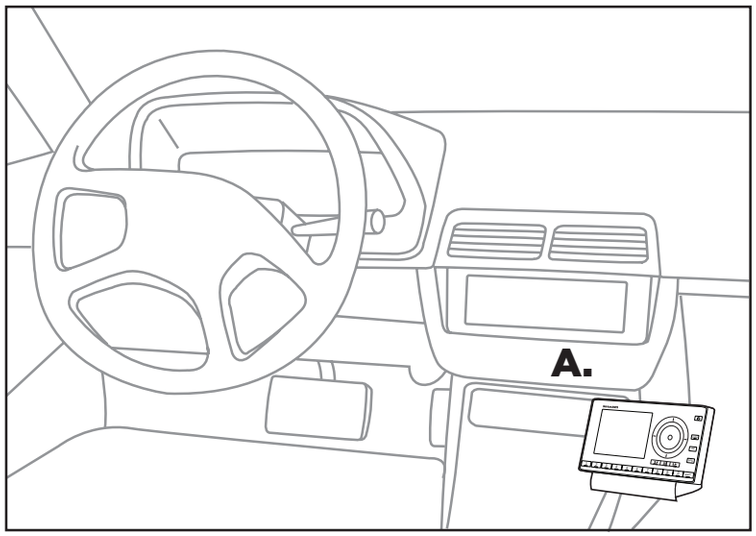

Option 5

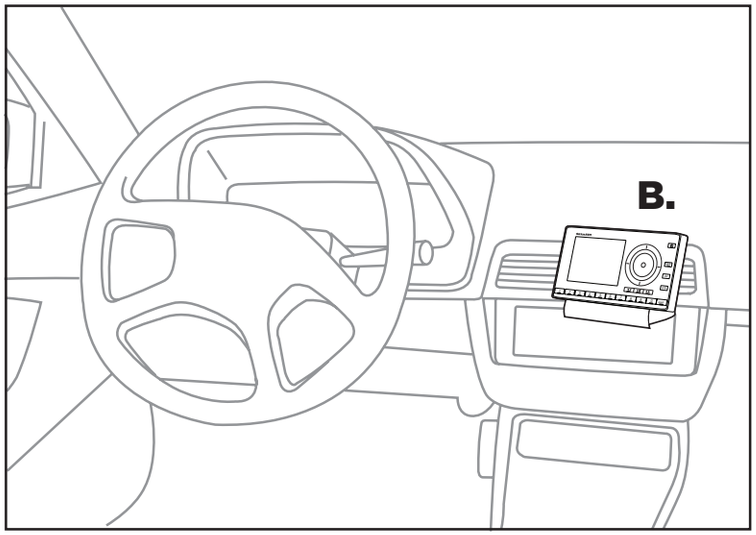

Option 6

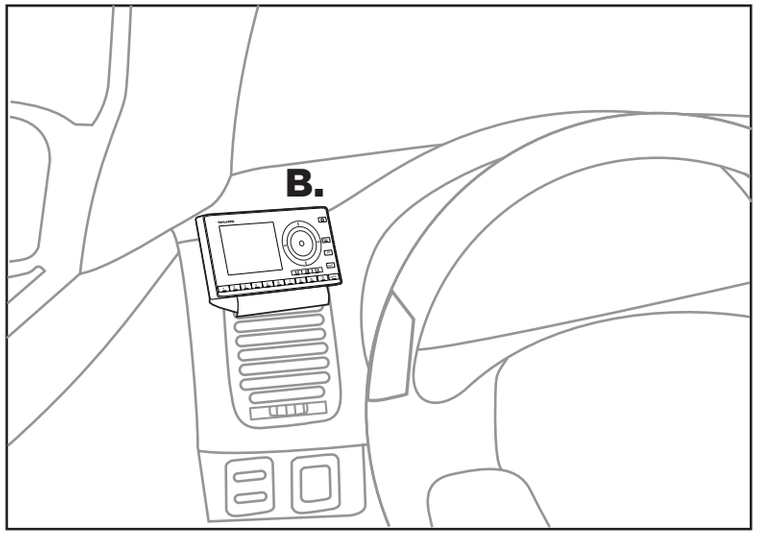

Step 2: Install the Adhesive or Vent Mount

Follow the instructions on the next several pages for the mounting method you have selected.

Installing the Adhesive Mount:

CAUTION! The adhesive used on the Adhesive Mount may be difficult to remove. Do not install this mount on leather surfaces (contact your automobile dealership if you are unsure about your dash surface), and make sure the air temperature is at least 60°F (15°C) during installation. If it's not at least 60°F, turn on the heater in your vehicle to bring the temperature up to 60°F.

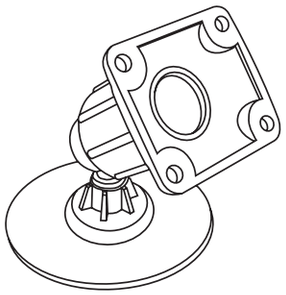

1. Locate a flat surface for the Adhesive Mount. Make sure there is ample room for the *Power*Connect Vehicle Dock and Onyx Plus Radio when installed.

2. Set the orientation of the Adhesive Mount before adhering it. Loosen the knob and adjust the adhesive foot for the location you selected in "Step 1: Choose a Location for Your Radio" on page 12.

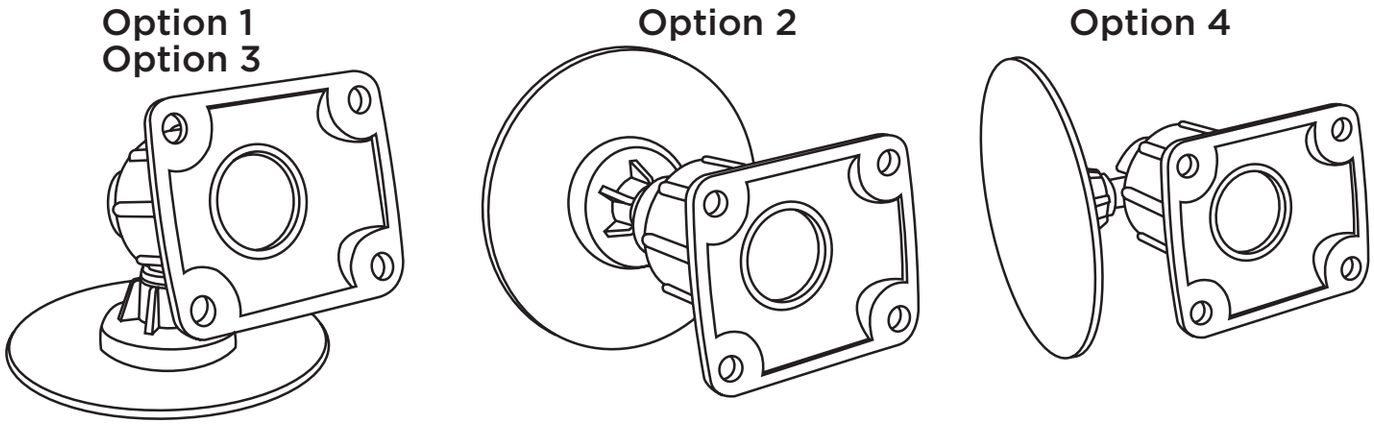

3. The dock mounting plate can be tilted in different directions. Adjust as necessary for your particular vehicle. When the orientation is correct, tighten the knob.

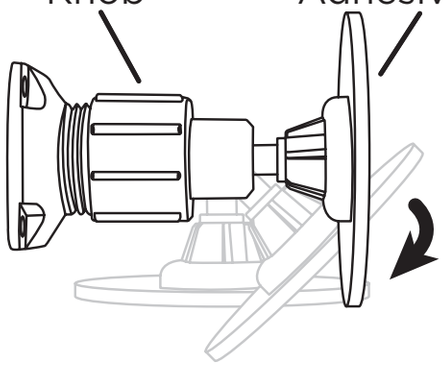

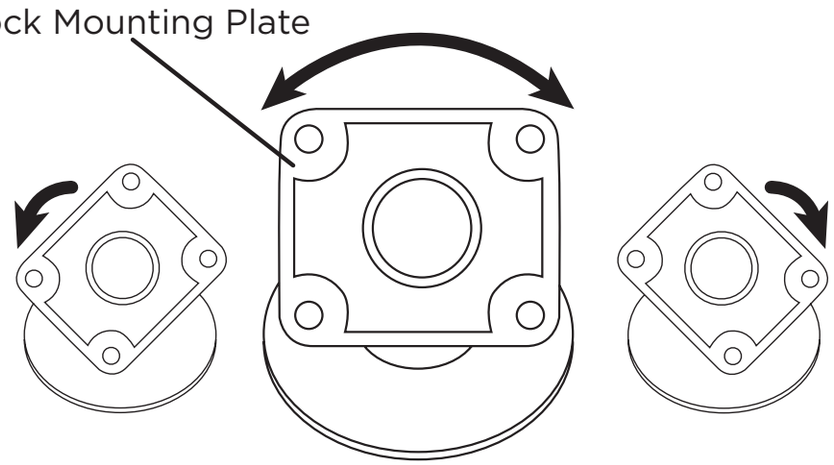

4. Attach the Adhesive Mount to the *Power*Connect Vehicle Dock using the 4 provided screws.

5. Before you attach the Adhesive Mount to the dash, skip ahead and finish the remainder of the vehicle installation so that the cables are attached to the dock.

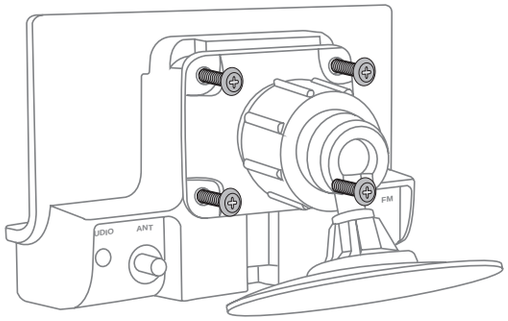

6. Once the cables have been attached to the dock, clean the mounting surface in the vehicle with the alcohol preparation pad and let it dry thoroughly.

7. Peel off the adhesive liner. Position, press, and hold the Adhesive Mount in place for 30 seconds.

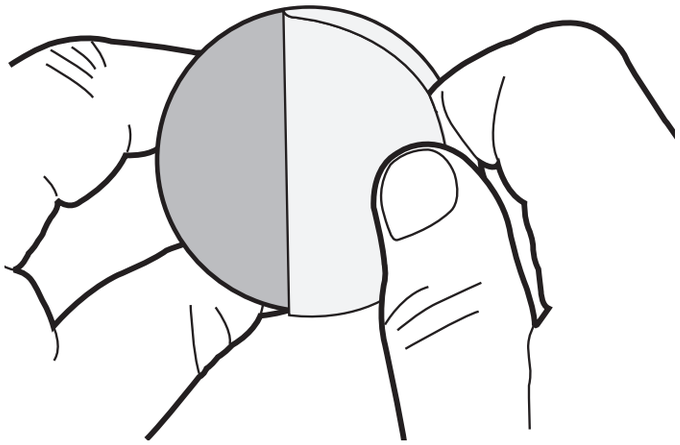

IMPORTANT! Allow the Adhesive Mount adhesive to cure (dry) for a minimum of 2-4 hours before using the mount. The best adhesion occurs after 24 hours.

TIP! To remove the Adhesive Mount, carefully lift the adhesive pad with your fingers or a spoon. Warming the pad with a hair dryer for several minutes will help soften the adhesive.

Installing the Vent Mount:

IMPORTANT! To make the cable connections easier, wait until after you have connected all the cables to the dock before you attach the Vent Mount to a vent.

1. Locate a vent with horizontal louvers sturdy enough to hold your *Power*Connect Vehicle Dock and Onyx Plus Radio.
2. If the vent louvers in your vehicle are recessed, you may need to use the longer vent clamps with the Vent Mount. If so, remove the shorter vent clamps and install the longer ones into the Vent Mount. Be sure to observe the orientation of the vent clamps as shown, and replace both vent clamps.

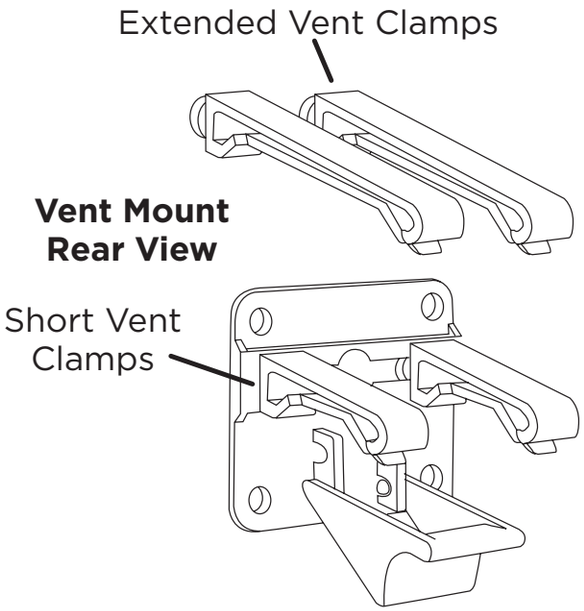

Vent Mount Rear View

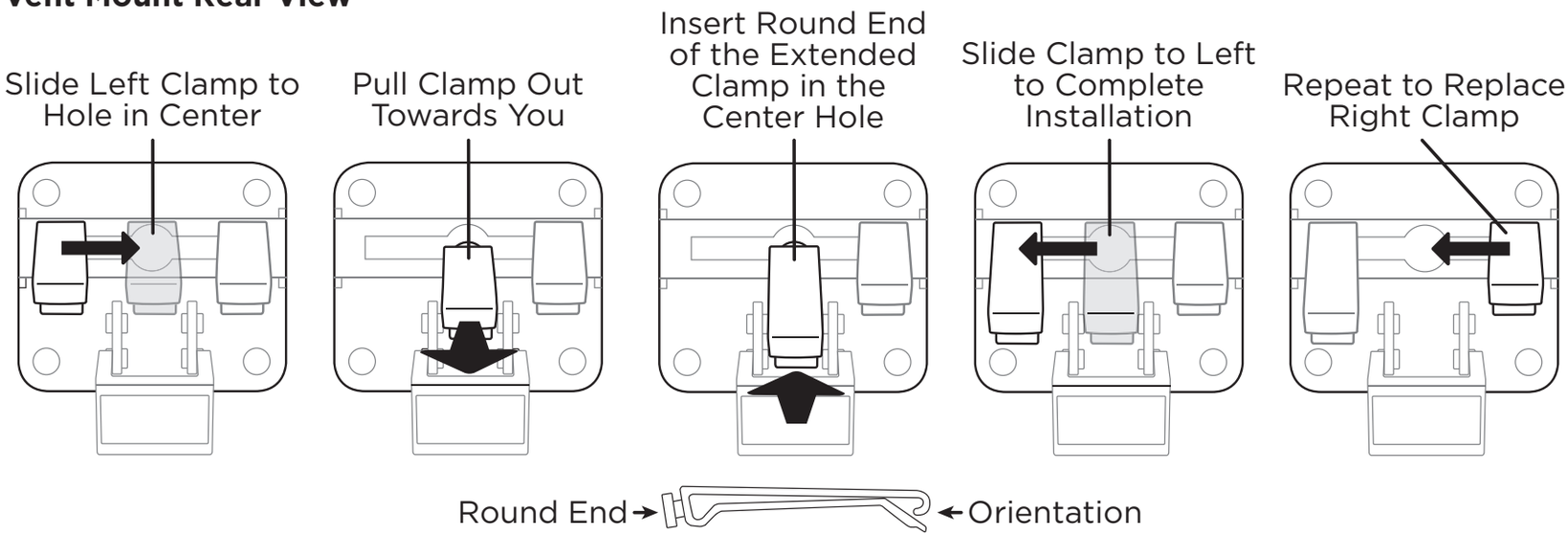

3. Attach the Vent Mount to the *Power*Connect Vehicle Dock using the 4 provided screws.

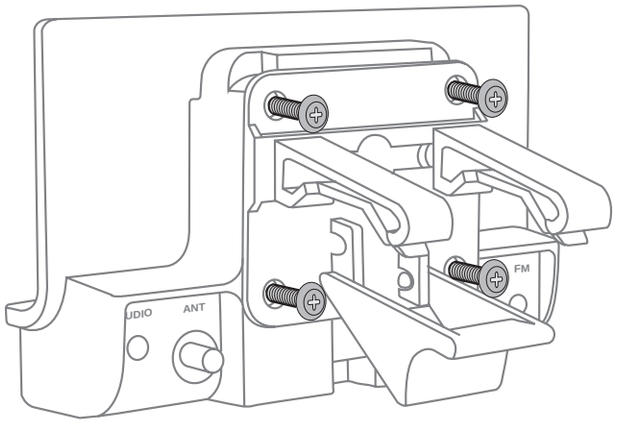

4. Before you attach the Vent Mount to the vent, skip ahead and finish the remainder of the vehicle installation so that the cables are attached to the dock.

Note! For greater clarity, the next illustration does not show the dock attached to the Vent Mount, however, the dock should be attached before continuing.

5. Once the cables have been attached to the dock, push the Vent Mount onto the vehicle vent as shown (1) until it hooks on the rear of the vent louver (2).

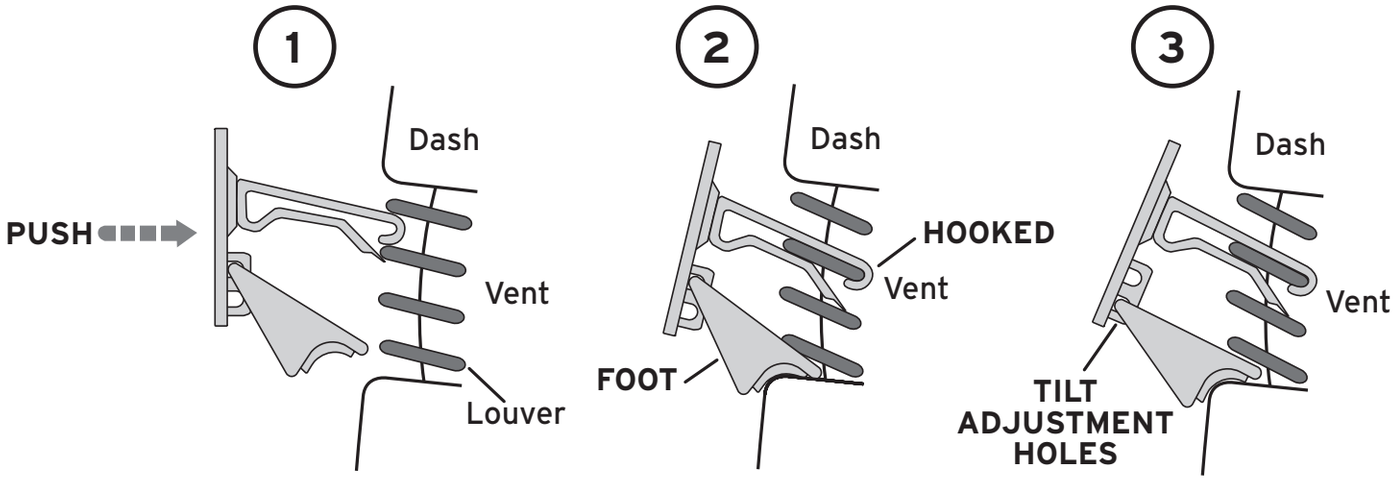

6. Rest the foot against the bottom of the vent (2), and adjust the tilt of the Vent Mount by repositioning the foot to the other adjustment hole (3).

TIP! To remove the Vent Mount, push the mount into the vent. Then lift up until disengaged from the rear of the vent louver, and remove the Vent Mount.

Step 3: Mount the Magnetic Mount Antenna

Mount the Magnetic Mount Antenna on the outside of your vehicle, on a horizontal surface that will always face the sky. The antenna contains a strong magnet which will stick to any metal part of your vehicle, but will not damage the vehicle.

To install the Magnetic Mount Antenna:

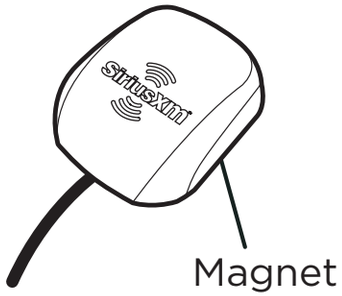

1. Choose the best location for your antenna considering your vehicle type. Pay particular attention to any accessories that you may have like luggage racks and how frequently you may use them.

Sedan/Coupe: We recommend mounting the antenna just above either the front windshield or the back window as shown.

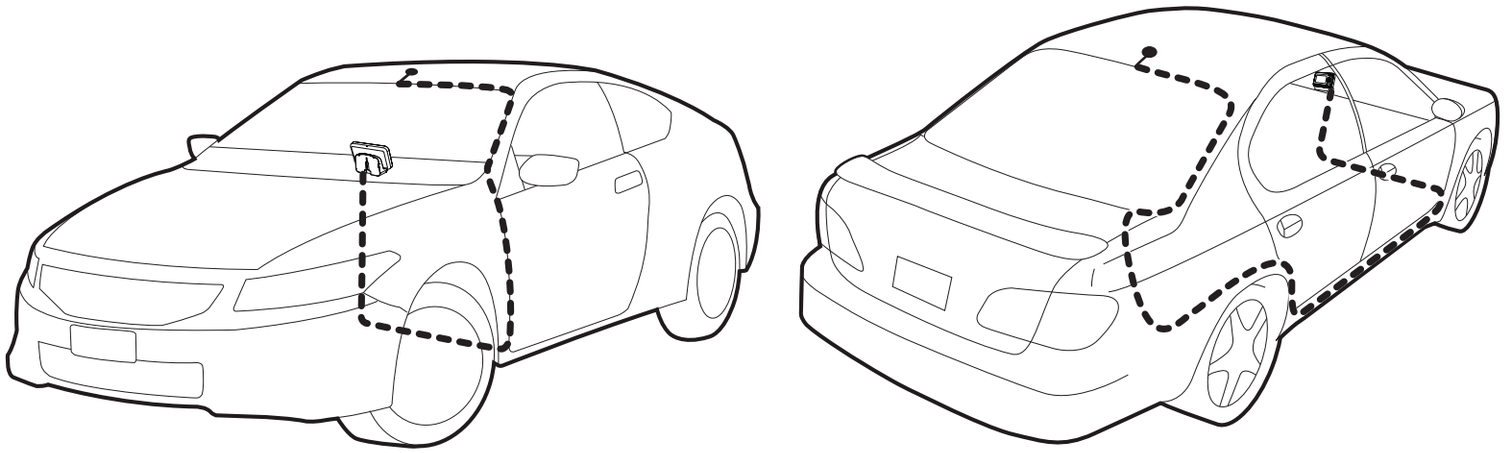

SUV: We recommend mounting the antenna at the rear of the roof as shown.

Convertible: We recommend mounting the antenna at the leading edge of the trunk as shown.

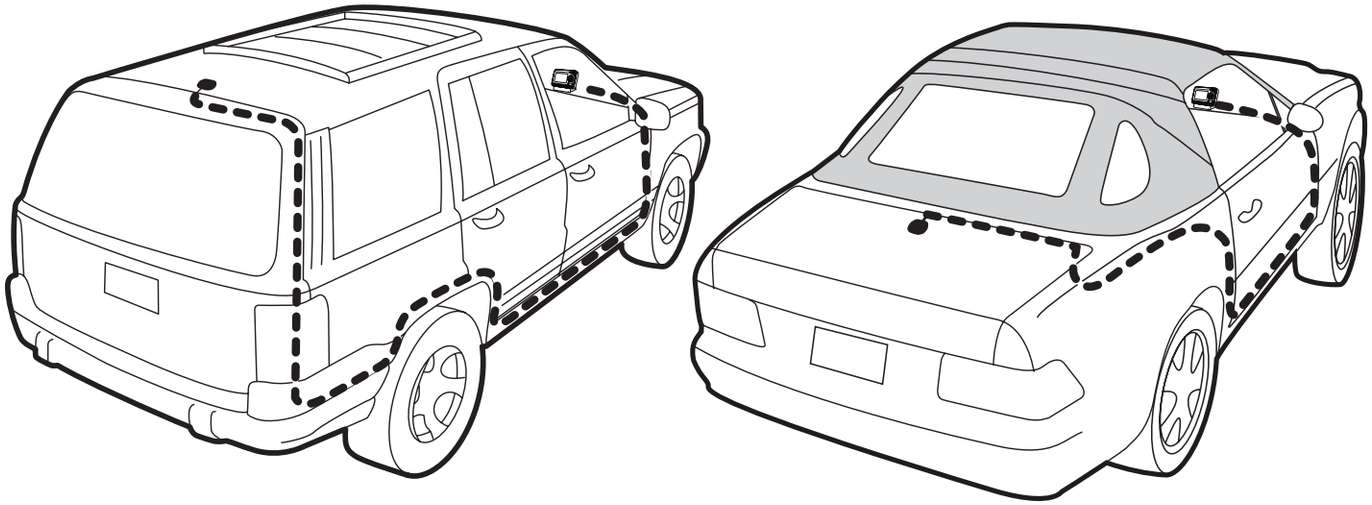

Pickup Truck: We recommend mounting the antenna just above the front windshield as shown.

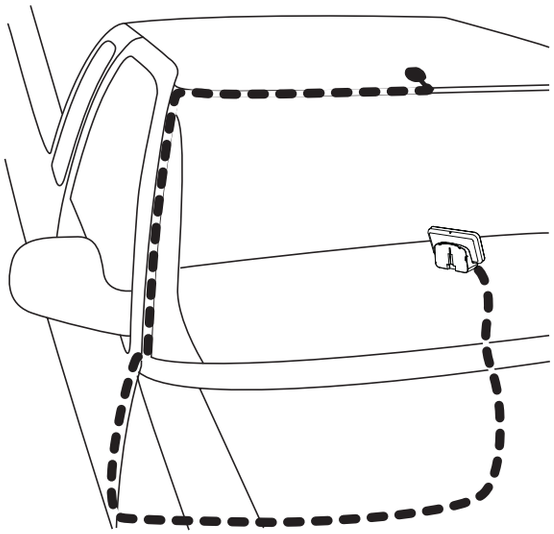

IMPORTANT! Consult a professional installer if your vehicle roof or hood is non-metallic (i.e., fiberglass), or you have difficulty finding a location for your antenna.

2. Clean the surface of the selected mounting location using the alcohol preparation pad and let it dry thoroughly.

3 If you are installing the antenna at the roof edge, or hood edge, install the Cable Routing Adapter to direct the antenna cable downward.

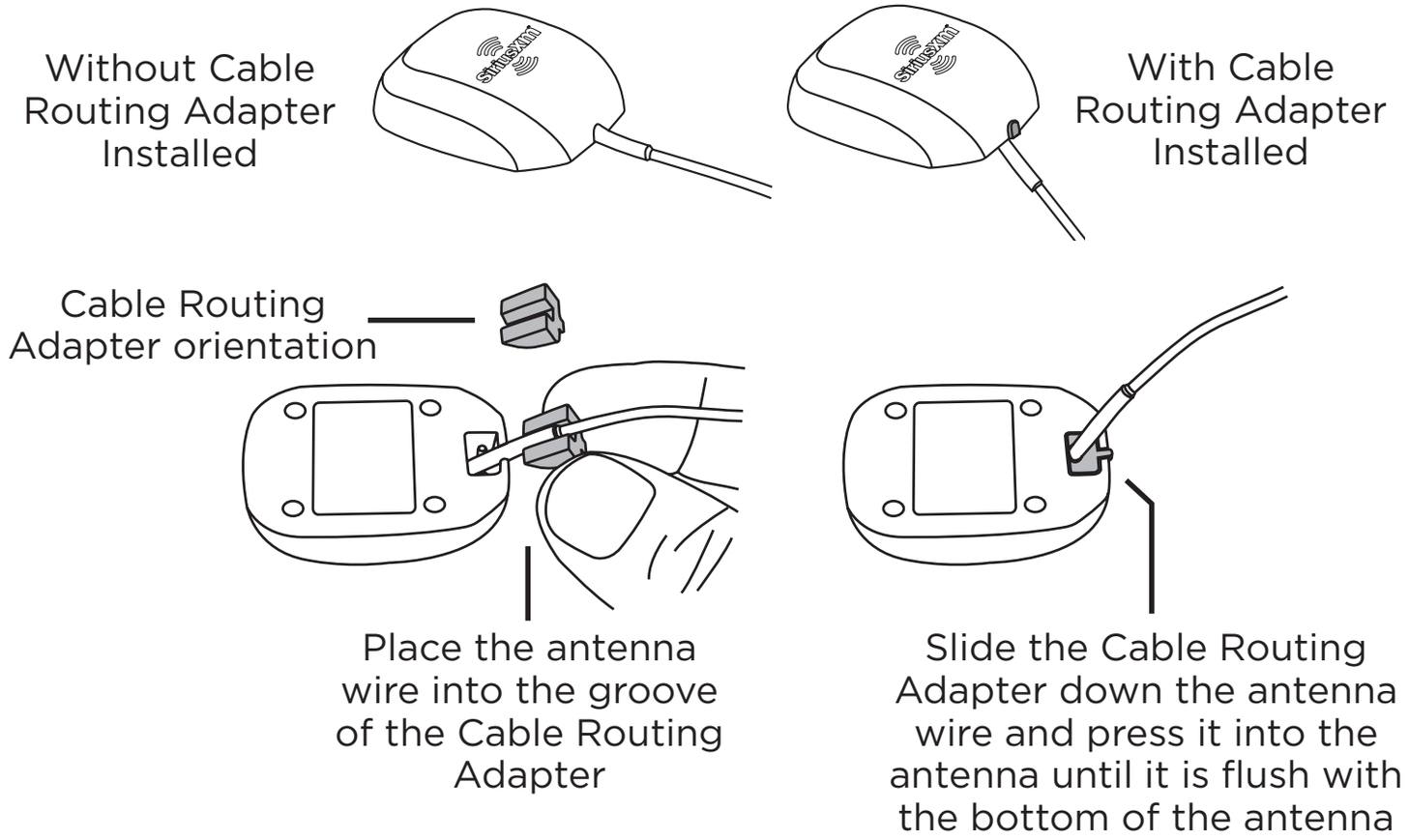

4 Place the antenna in the location you selected. Follow the Tips and Cautions shown on the next several pages.

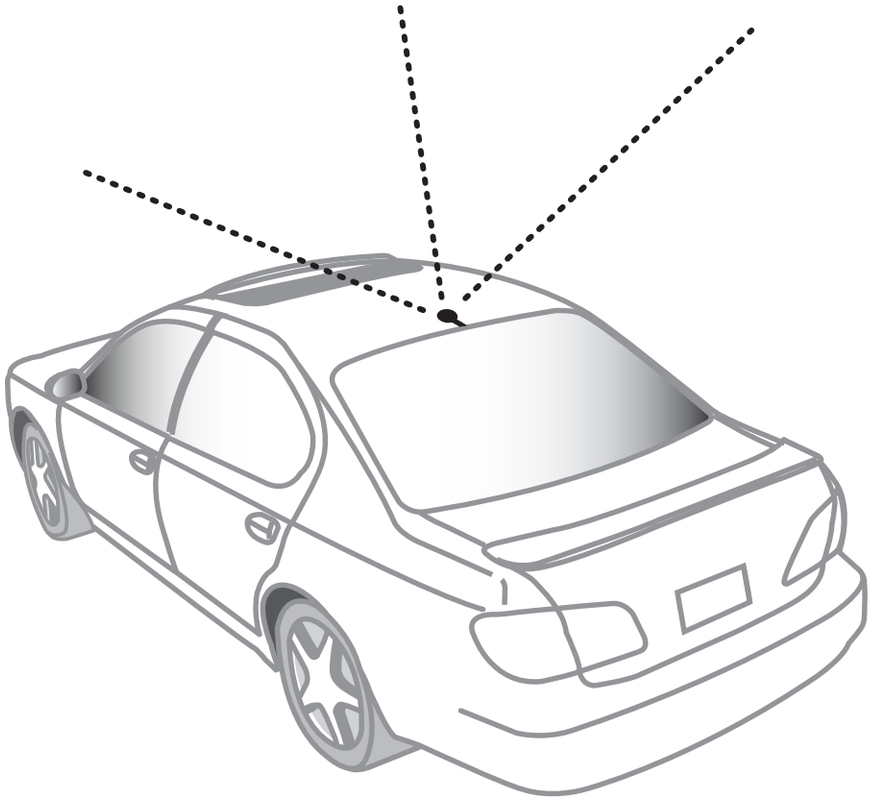

TIP! Mount the antenna on the roof (for most vehicles) or trunk (for convertibles) where it has a clear view of the sky in all directions.

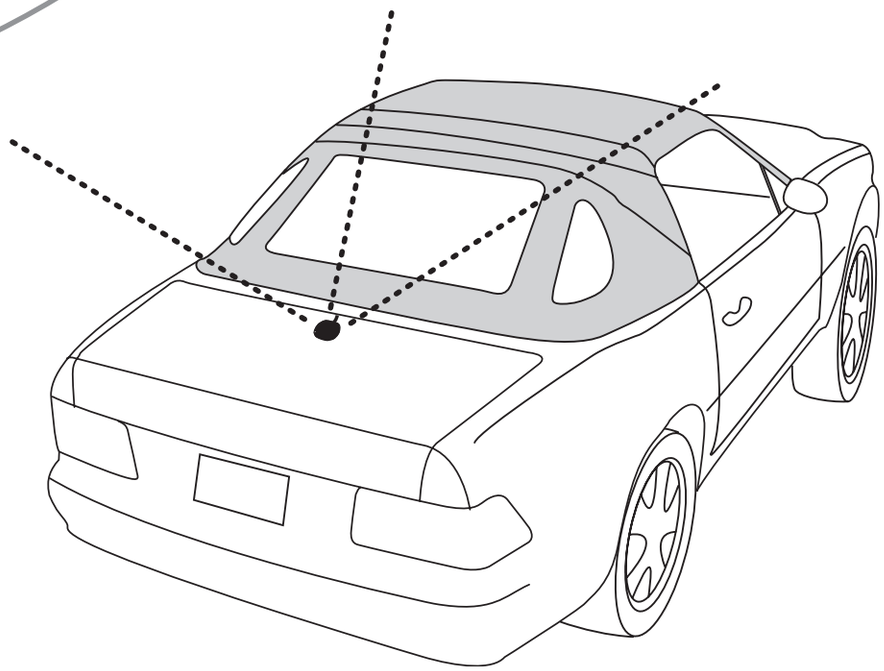

CAUTION! Don’t mount the antenna inside the vehicle, for example, on the dashboard.

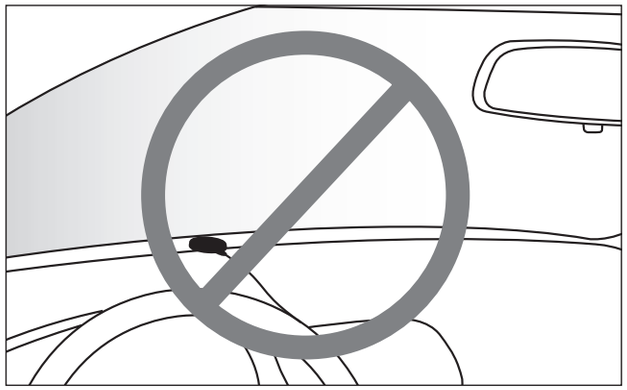

CAUTION! Don’t mount the antenna on any of the vehicle’s front, back or side pillars.

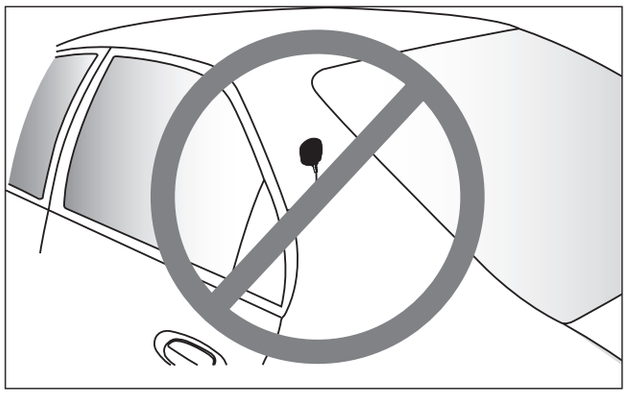

CAUTION! Don’t mount the antenna close to a roof rack. Adjust the rack so it’s further away from the antenna or move the antenna closer to the center of the roof.

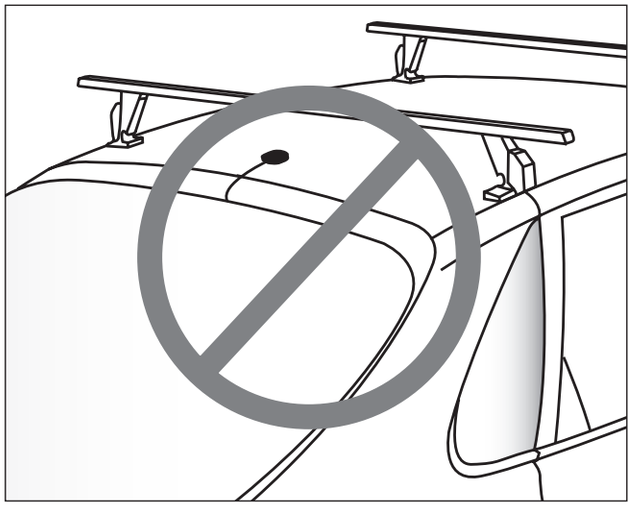

CAUTION! Don’t mount the antenna close to another antenna. Mount it at least 3 inches away.

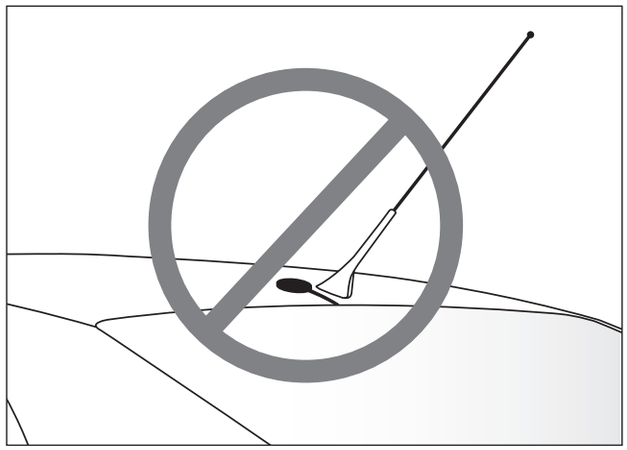

Step 4: Route the Magnetic Mount Antenna Cable

Before you begin routing the antenna cable, read these general instructions for how to route and hide the antenna cable. Then route your antenna cable according to the instructions which follow for your specific type of vehicle.

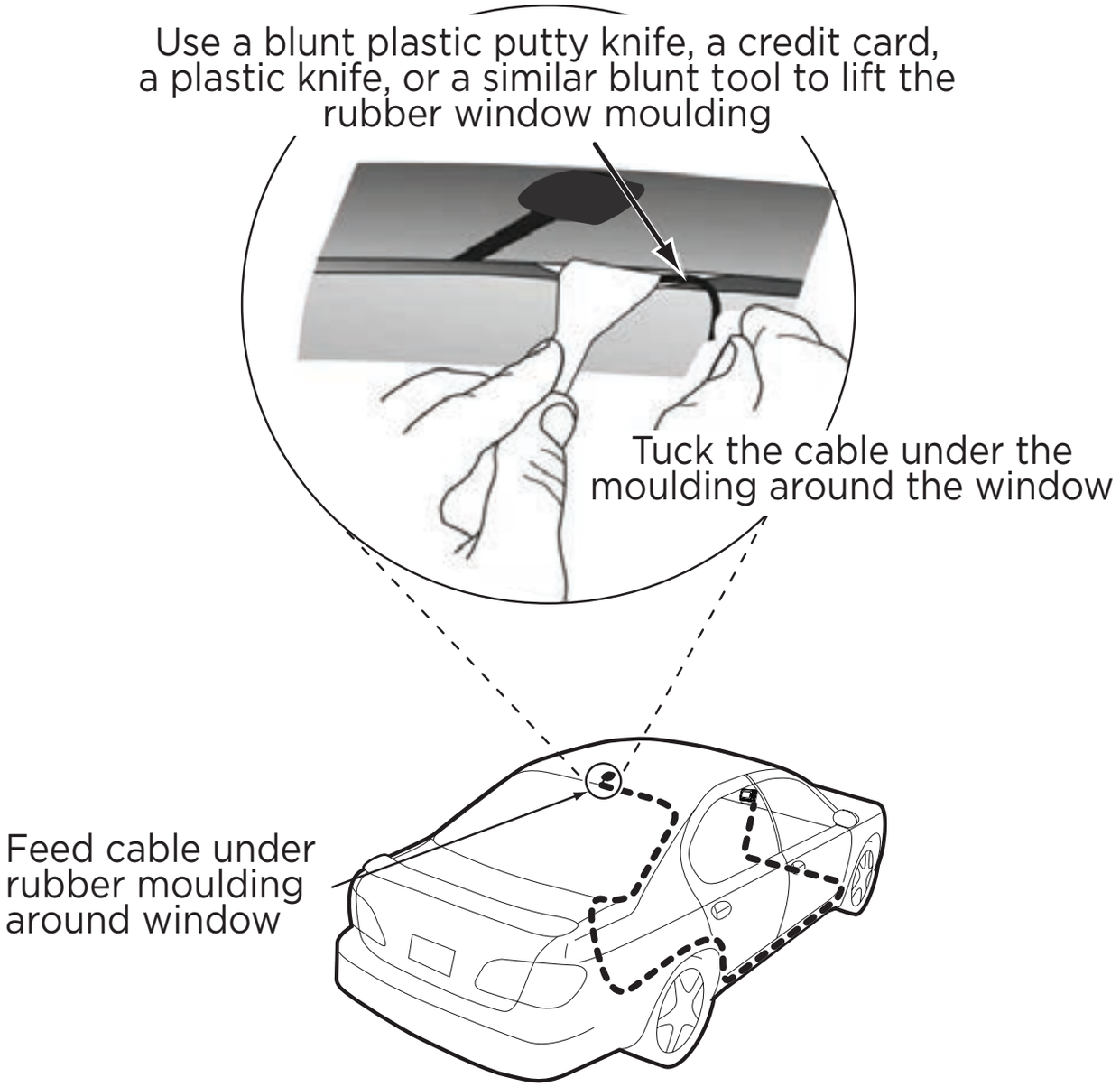

Route cable out from under rear windshield moulding and tuck into weatherstripping around trunk opening
Avoid sharp bends by running cable through weatherstripping for several inches

Pull weatherstripping from trunk opening

Tuck cable into weatherstripping. Route cable through weatherstripping several inches to avoid sharp bends

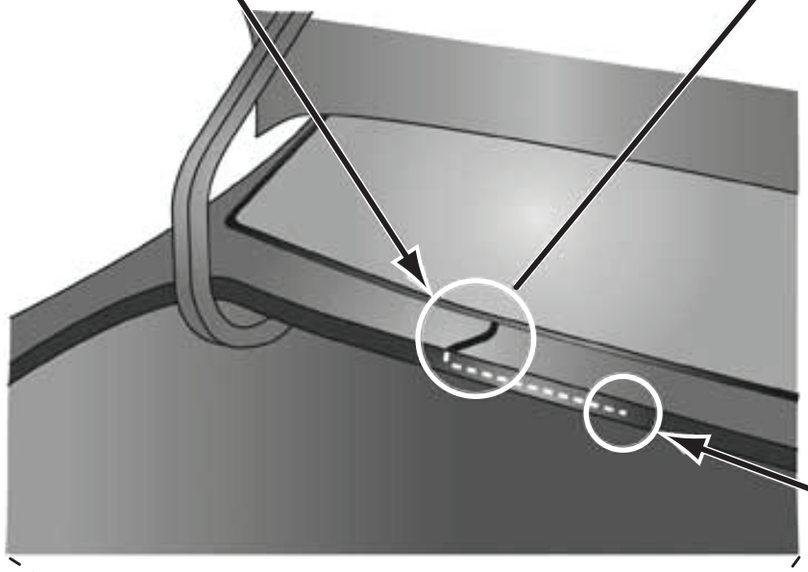

Pull cable out of weatherstripping and route through trunk to cabin

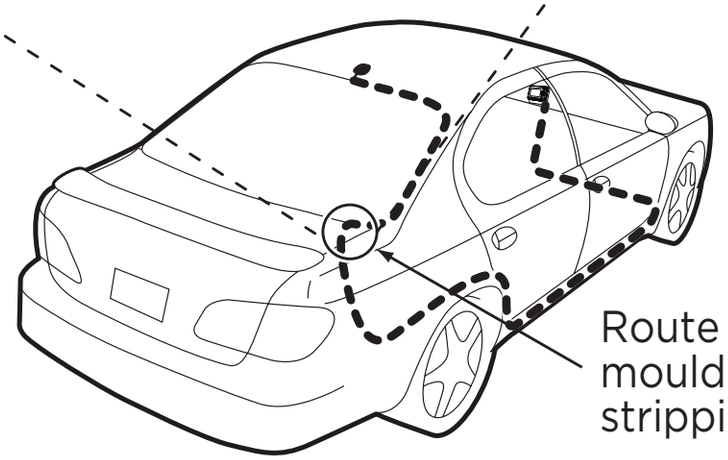

Route cable out of window moulding and into weather-stripping around trunk opening

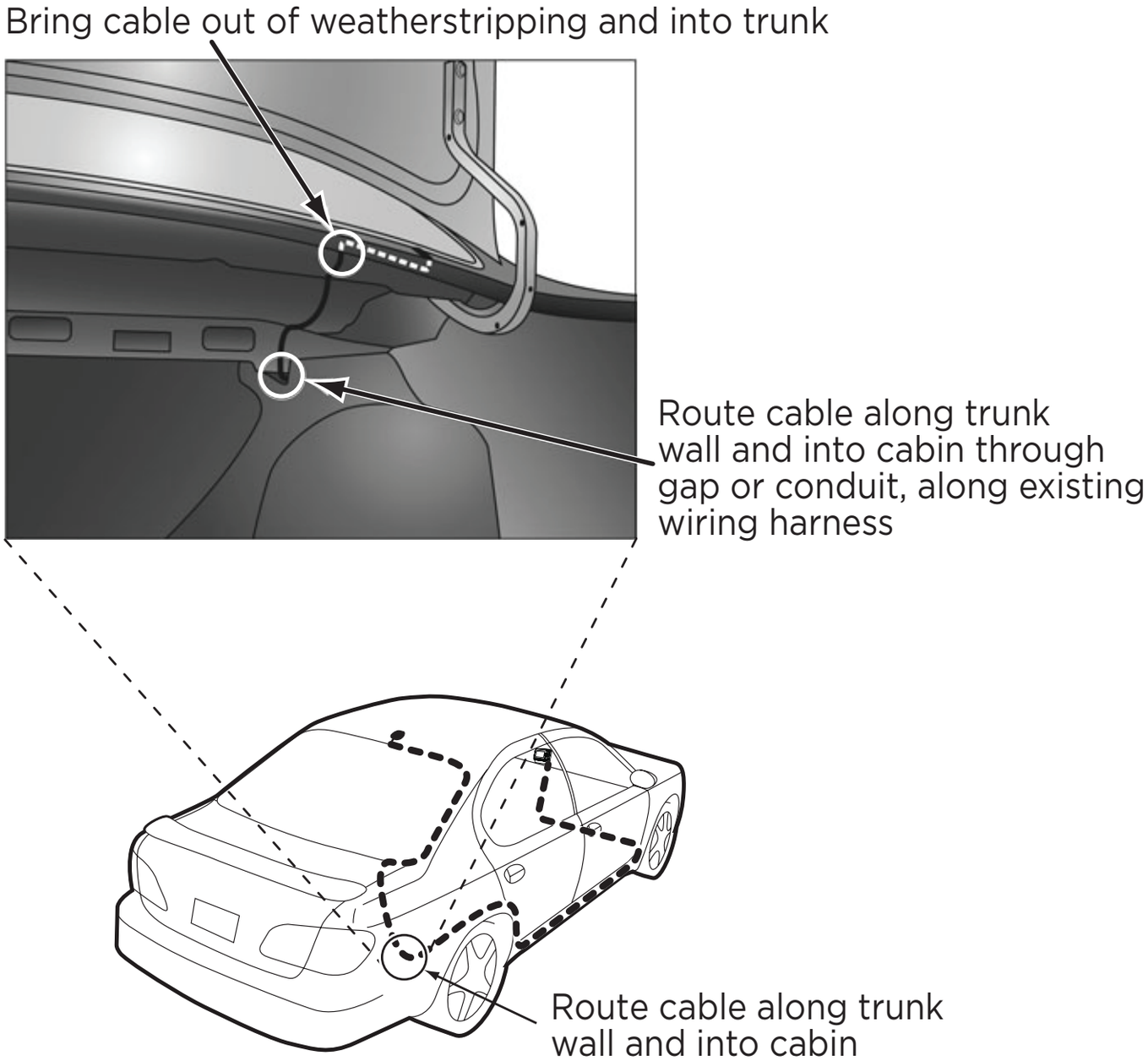
Bring cable out of weatherstripping and into trunk
Route cable along trunk wall and into cabin through gap or conduit, along existing wiring harness
Route cable along trunk wall and into cabin

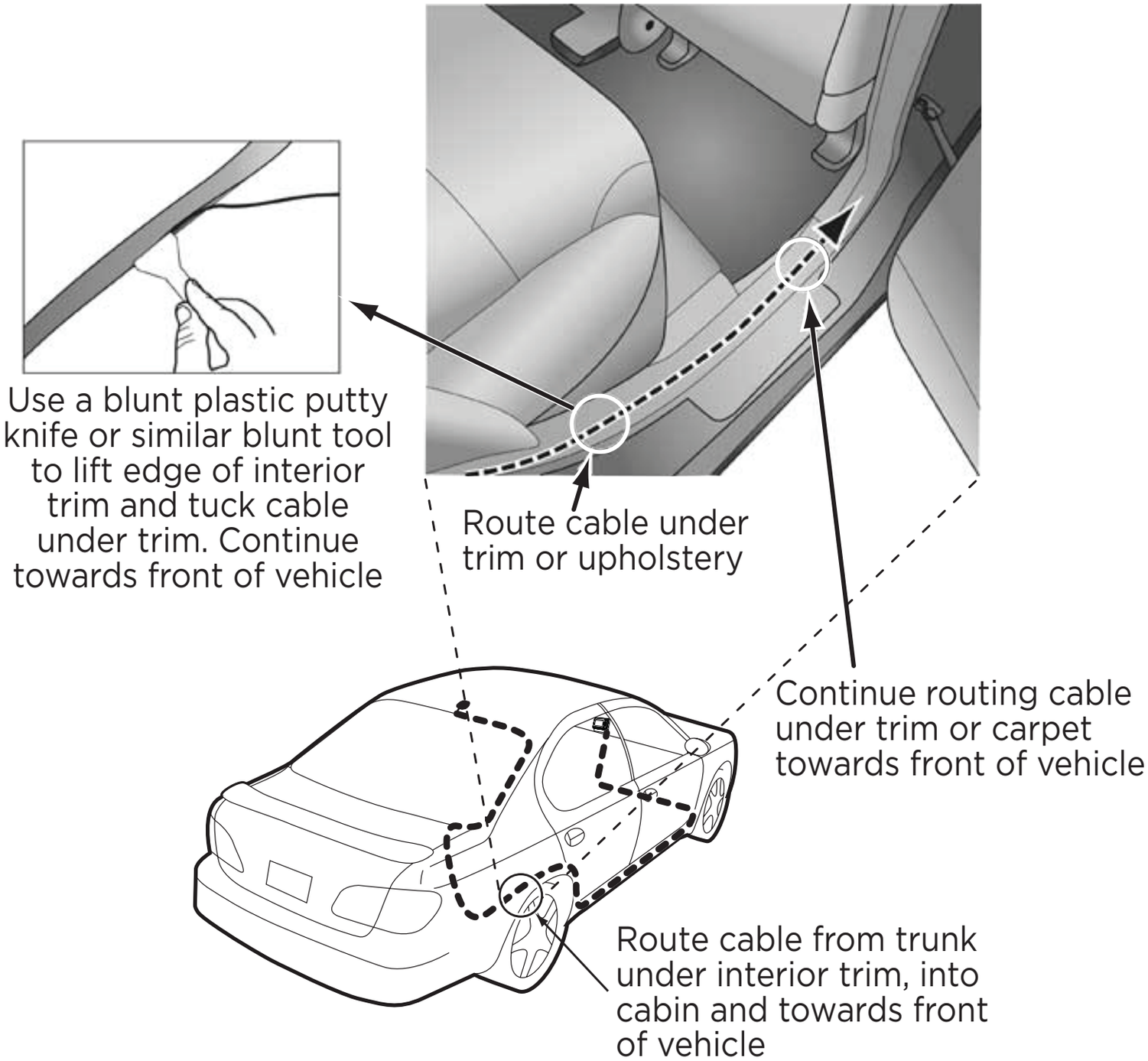
Use a blunt plastic putty knife or similar blunt tool to lift edge of interior trim and tuck cable under trim. Continue towards front of vehicle
Route cable under trim or upholstery
Continue routing cable under trim or carpet towards front of vehicle
Route cable from trunk under interior trim, into cabin and towards front of vehicle

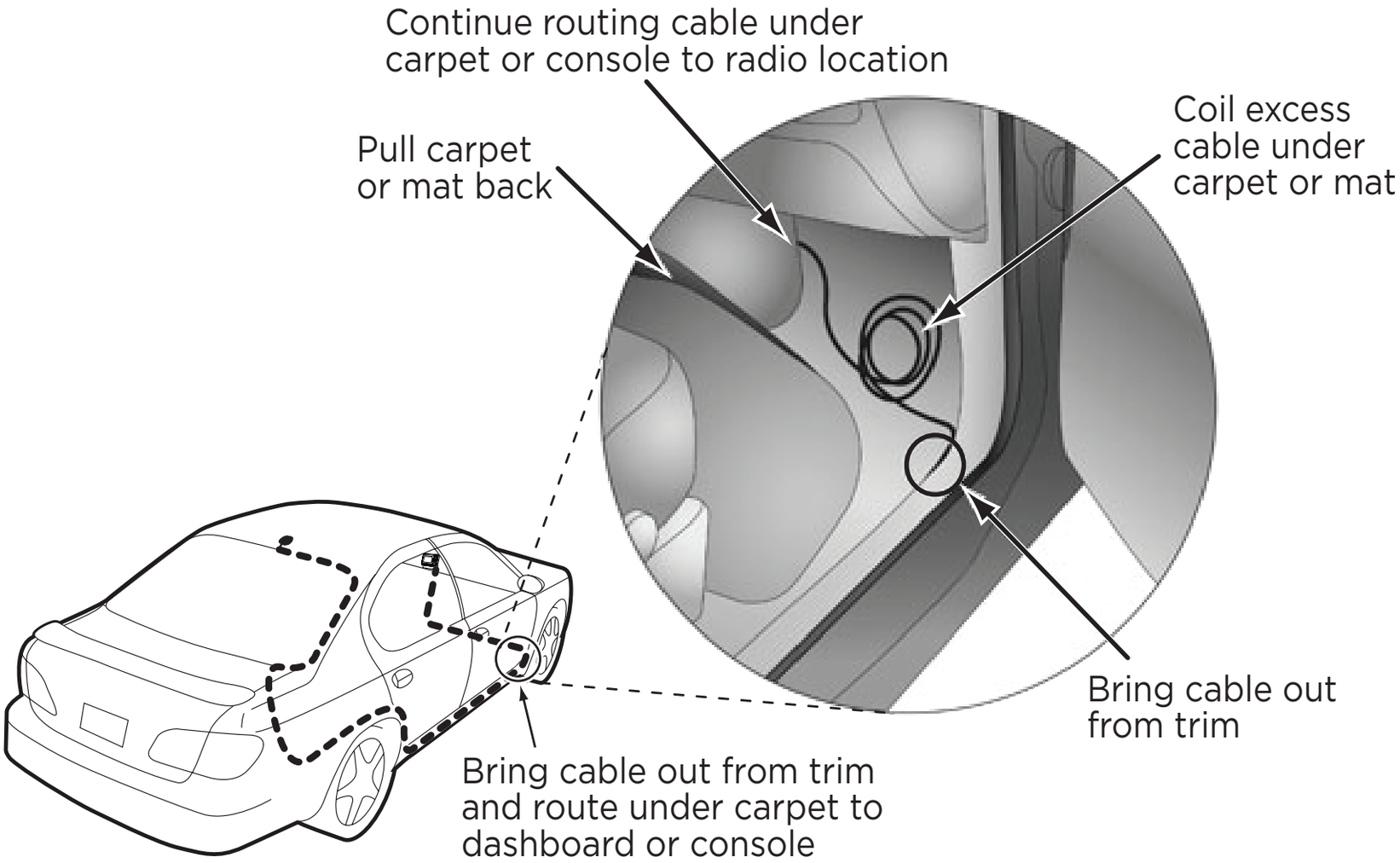

TIP! Always be careful to include enough slack in your cable to accommodate open doors or trunk lids. Use things typically found around the home, like electrical tape, to secure cables in areas so that hinges do not pinch the cable with the door. Hide any excess cable in the trim.

Sedan/Coupe With Antenna Placed at the Rear of the Roof:

1. Feed the antenna cable from the antenna underneath the rubber molding around the rear window. Use a blunt plastic putty knife or similar blunt tool to lift the rubber molding around the rear window and tuck the antenna cable underneath the molding. Route the antenna cable around and down the window to the lowest point. If your rear window does not have rubber molding, we recommend consulting a professional installer.

2. Route the antenna cable out of the window molding and into the rubber weather stripping around the trunk opening. Lift the weather stripping from the opening and tuck the cable inside it, then replace the weather stripping. To avoid sharp bends in the cable, run the cable inside the weather stripping for a few inches, then remove the cable from the weather stripping inside the trunk. Keep the cable away from hinges, gears, etc., that could damage it.

3. Route the cable out from the rubber weather stripping and along the trunk wall. Continue routing the cable into the vehicle cabin through a conduit or along an existing wiring harness.

4. Route the cable through the main cabin area under the interior trim, towards the front of the vehicle. Use a blunt plastic putty knife or similar blunt tool to lift the plastic trim just enough to tuck the cable under underneath. Avoid side airbag locations on back pillars and above the doors. Airbag locations are marked with “SRS”

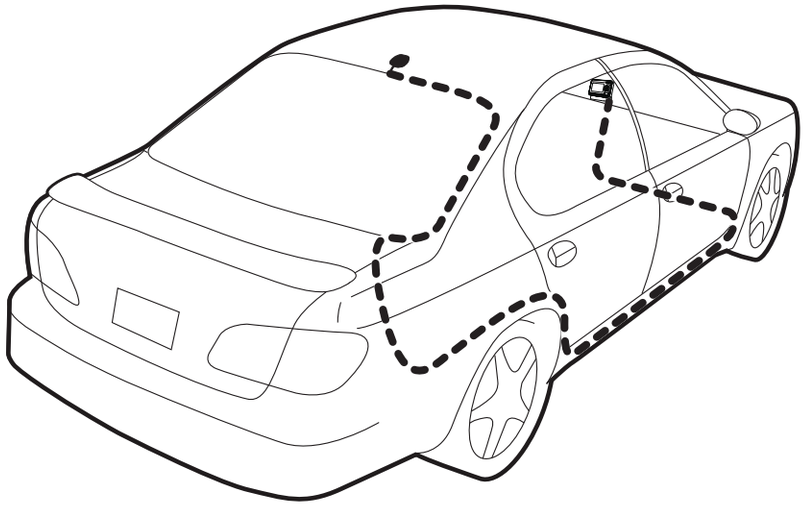

logos. Be careful not to crimp or cut the cable.

5. Bring the cable out from the trim near the front of the cabin and route it under the carpet toward the dashboard or console. Coil any excess cable in a hidden location, such as under the carpet, keeping it away from any vehicle pedals or controls. Secure the excess cable with wire ties (purchased separately).

6. Bring the end of the cable out at the *Power*Connect Vehicle Dock location. Leave yourself enough cable so you can easily connect it to the antenna connector of the dock.

7. Continue with “Step 5: Connect the Magnetic Mount Antenna and *Power*Connect Power Adapter” on page 35.

Sedan/Coupe With Antenna Placed at the Front of the Roof

1. Feed the antenna cable from the antenna underneath the rubber molding around the windshield. Use a blunt plastic putty knife or similar blunt tool to lift the rubber molding around the windshield and tuck the antenna cable underneath the molding. Route the antenna cable around and down the windshield to the lowest point.

2. At the lowest corner of the windshield, route the cable out of the windshield molding and into the rubber weather stripping around the door opening. Lift the weather stripping from the opening and tuck the cable inside it, then replace the weather stripping. Run the cable inside of the weather stripping to the bottom of the door

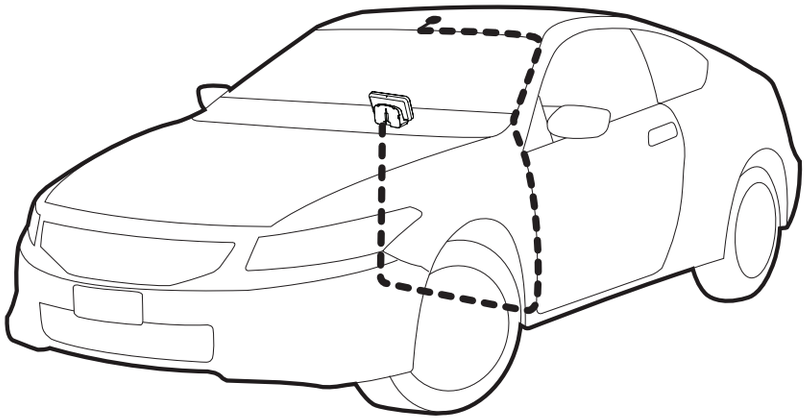

opening.

3. Pull the cable out of the weather stripping at the bottom of the door opening and route it under the carpet toward the dashboard. Coil any excess cable in a hidden location, such as under the carpet, keeping it away from any vehicle pedals or controls. Secure the excess cable with wire ties.

4. Bring the end of the cable out at the *Power*Connect Vehicle Dock location. Leave yourself enough cable so you can easily connect it to the antenna connector of the dock.

5. Continue with “Step 5: Connect the Magnetic Mount Antenna and *Power*Connect Power Adapter” on page 35.

Sport Utility Vehicle (SUV)

1. Feed the antenna cable underneath the rubber weather stripping of the rear tailgate window/door and route the cable along the rear hatch. Lift the weather stripping from the opening and tuck the cable inside it, then replace the weather stripping. Pull the cable out from weather stripping and route it into the cabin under the interior trim. Avoid hinges or gears that could crimp or cut the cable.

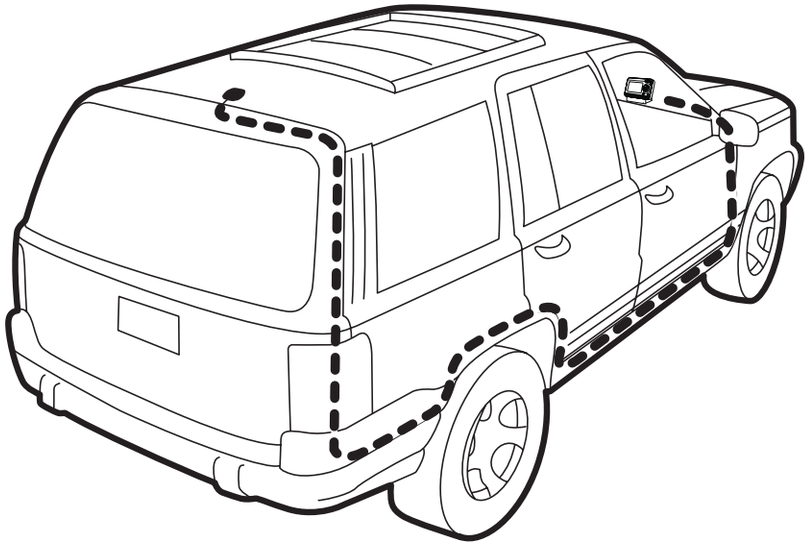

2. Route the cable through the SUV’s main cabin area under the interior trim, towards the front of the vehicle. Use a blunt plastic putty knife or similar blunt tool to lift the plastic trim just enough to tuck the cable

under underneath. Avoid side airbag locations on back pillars and above the doors. Airbag locations are marked with “SRS” logos. Be careful not to crimp or cut the cable.

3. Bring the cable out from the trim near the front of the cabin and route it under the carpet toward the dashboard or console. Coil any excess cable in a hidden location, such as under the carpet, keeping it away from any vehicle pedals or controls. Secure the excess cable with wire ties (purchased separately).

4. Bring the end of the cable out at the *Power*Connect Vehicle Dock location. Leave yourself enough cable so you can easily connect it to the antenna connector of the dock.

5. Continue with “Step 5: Connect the Magnetic Mount Antenna and *Power*Connect Power Adapter” on page 35.

Convertible

1. Bring the antenna cable from the antenna into the trunk at the front edge of the trunk lid. Keep any bends in the cable loose. Tape or tie the cable along the inside of the trunk lid to the trunk lid hinge strut.

2. Allow enough slack in the cable so the trunk lid can easily open and close and keep the cable away from hinges, gears, etc., that could crimp or cut it. Route the cable along the trunk wall and into the cabin through a conduit or along an existing wiring harness.

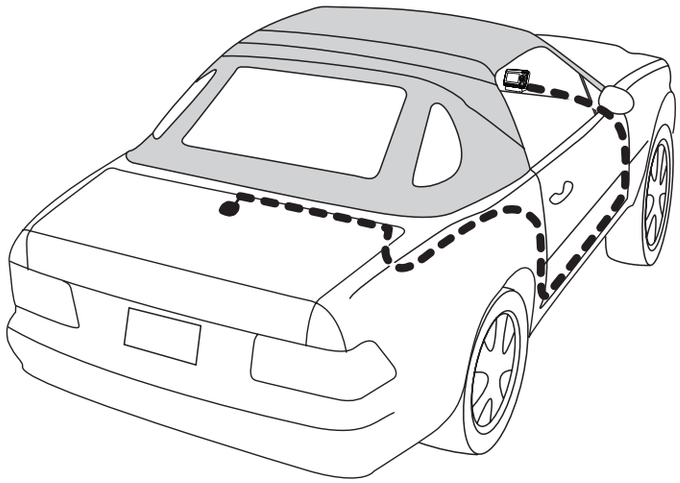

3. Route the cable through the main cabin area under the interior trim,

towards the front of the vehicle. Use a blunt plastic putty knife or similar blunt tool to lift the plastic trim just enough to tuck the cable under underneath. Avoid side airbag locations on back pillars and above the doors. Airbag locations are marked with “SRS” logos. Be careful not to crimp or cut the cable.

4. Bring the cable out from the trim near the front of the cabin and route it under the carpet toward the dashboard or console. Coil any excess cable in a hidden location, such as under the carpet, keeping it away from any vehicle pedals or controls. Secure the excess cable with wire ties (purchased separately).

5. Bring the end of the cable out at the *Power*Connect Vehicle Dock location. Leave yourself enough cable so you can easily connect it to the antenna connector of the dock.

6. Continue with “Step 5: Connect the Magnetic Mount Antenna and *Power*Connect Power Adapter” on page 35.

Pickup Truck

1. Use a blunt plastic putty knife or similar blunt tool to lift the rubber molding around the windshield and tuck the antenna cable underneath it.

2. Continue tucking the cable underneath the windshield molding around the windshield to the lowest corner.

3. At the lowest corner of the windshield, route the cable out of the windshield molding and into the rubber weather

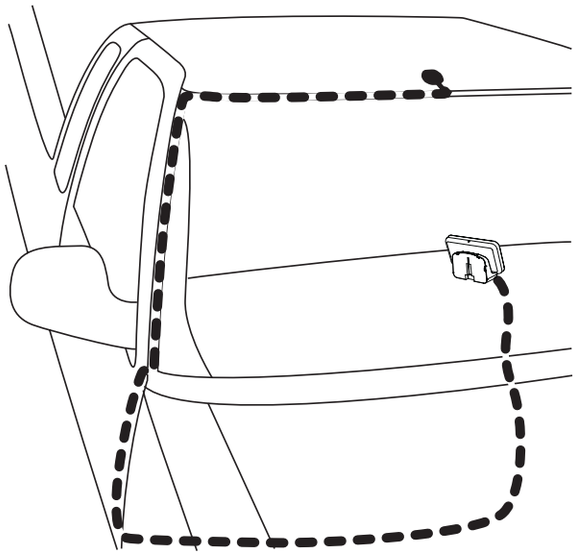

stripping around the door opening. Lift the weather stripping from the opening and tuck the cable inside it, then replace the weather stripping. Run the cable inside of the weather stripping to the bottom of the door opening.

4. Pull the cable out of the weather stripping at the bottom of the door opening and route it under the carpet toward the dashboard. Coil any excess cable in a hidden location, such as under the carpet, keeping it away from any vehicle pedals or controls. Secure the excess cable with wire ties.

5. Bring the end of the cable out at the *Power*Connect Vehicle Dock location. Leave yourself enough cable so you can easily connect it to the antenna connector of the dock.

6. Continue with “Step 5: Connect the Magnetic Mount Antenna and *Power*Connect Power Adapter” on page 35.

Step 5: Connect the Magnetic Mount Antenna and *Power*Connect Power Adapter

1. Plug the Magnetic Mount Antenna into the **silver ANT** connector on the *Power*Connect Vehicle Dock.

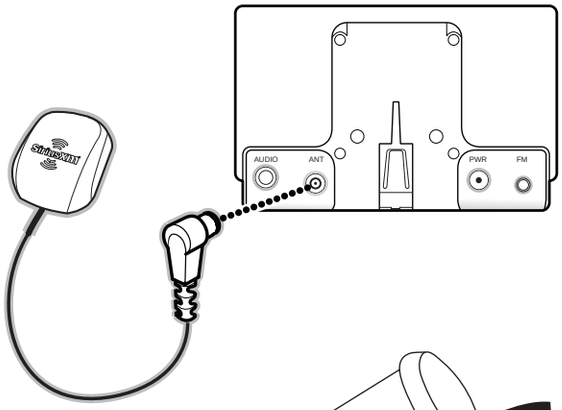

2. Insert the *Power*Connect Power Adapter into your vehicle's cigarette lighter or power adapter socket.

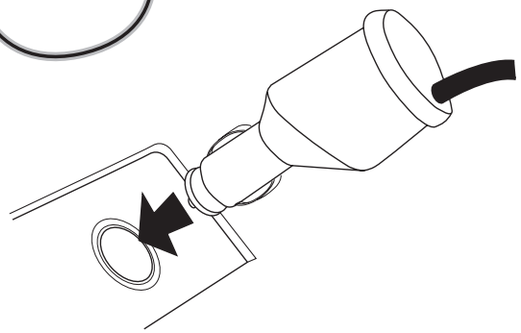

3. Plug the *Power*Connect Power Adapter into the **red PWR** connector on the dock.

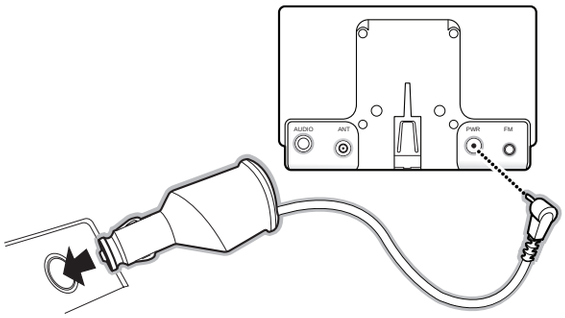

Step 6: Connect the Audio

To play XM audio through your vehicle's stereo or FM radio, decide on one of the following audio connection options:

- **Option 1**: **Best**: Use the provided **Aux In Cable** if your vehicle's stereo system has an auxiliary input connection or jack. Refer to your vehicle's owners manual to find the location of the auxiliary input jack, or consult the vehicle dealer.

  TIP! The auxiliary input jack may be located on the face plate of the vehicle radio, on the back of the radio, anywhere on the front dash panel, inside the glove compartment, or inside the center console in between the front seats.

- **Option 2: Better**: Use a **Cassette Adapter** if your vehicle has a built-in cassette player. Cassette Adapters are sold separately and can be purchased from an electronics retailer, or go to **www.siriusxm.com/accessories**.
- **Option 3: Good:** Use the ***Power*Connect** feature of Onyx Plus. *Power*Connect plays the audio through your vehicle's FM radio.
- **Option 4: Best:** Use the **FM Direct Adapter**. If none of the previous three audio connection options will work in your vehicle, then you will need to use the FM Direct Adapter (FMDA) (sold separately). The FMDA needs to be installed by a professional installer and directly connects Onyx Plus to your vehicle's FM radio. To learn more, check with the retailer where you bought your Radio, or go to **www.siriusxm.com/accessories**.

Follow the installation instructions in the next several sections for the audio connection option that you have selected.

Option 1: Aux In Cable Installation Instructions

1. Plug one end of the Aux In Cable into the **green AUDIO** connector on the dock.

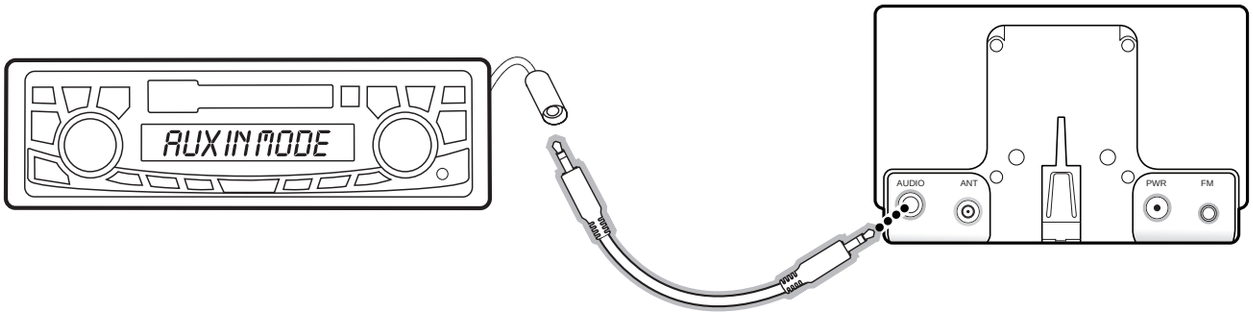

2. Plug the other end into the auxiliary input jack of your vehicle's stereo system.
3. If you are using the vent mounting method, attach the Vent Mount to the vehicle vent.
4. Insert your Onyx Plus into the dock.
5. Power on your Onyx Plus by pressing the **Power button**.

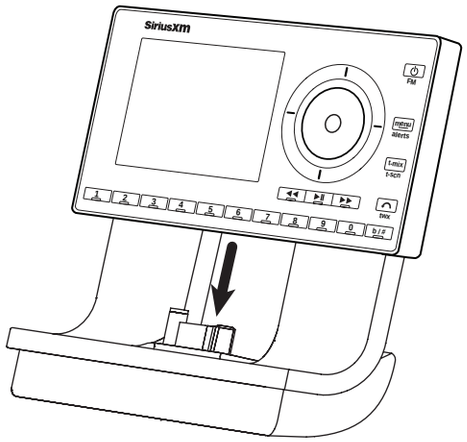

6. Be sure the vehicle is outside and the antenna has a clear view of the sky. Verify that you are receiving the XM signal. There should be at least two bars on the lower left corner of the main display screen that denotes antenna signal strength. You can also press **menu** and then press **down** to scroll to and highlight **Signal Indicator**. Press the **Select button**. The Satellite and Terrestrial bars show the strength of the signal being received. If the signal reception is good, press and hold **menu** to return to the main display screen.

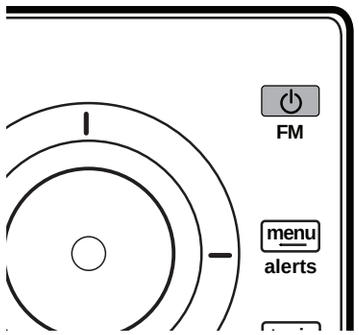

7. Ensure Onyx Plus is tuned to channel 1, the XM Preview channel. Upon power up, Onyx Plus should tune to channel 1 by default, when it's not yet activated. If it's not on channel 1, refer to "Listening to Satellite Radio" on page 51 to learn about how to tune a channel.

8. Turn on your vehicle's stereo system. Set it to play from the auxiliary input source. You should hear XM channel 1 through your vehicle's stereo system. You are now ready to activate your Onyx Plus.

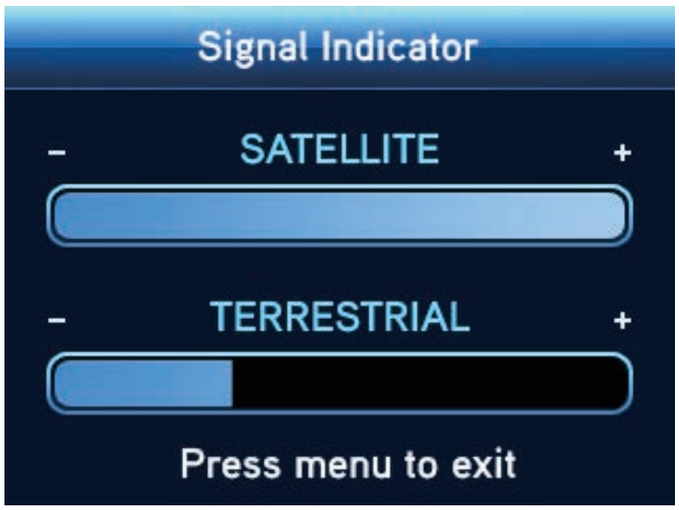

9. Go back to "Step 2: Install the Adhesive or Vent Mount" on page 14 and finish installing the Dash or Vent Mount. Then the installation is complete.

10. The audio level output of Onyx Plus can be increased or decreased as necessary to match the audio levels of other sources in your vehicle. Refer to "Audio Level" on page 112.

If the signal reception is good, showing at least two bars in the lower left corner of the display, but there is no XM audio, be sure the vehicle's stereo system is set to the auxiliary input source (step 8). Also be sure that the audio level is set high enough to be heard (step 10). Refer to "Troubleshooting" on page 125 for additional help.

Option 2: Cassette Adapter Installation Instructions

1. Plug the Cassette Adapter into the **green AUDIO** connector on the dock.
2. Insert the Cassette Adapter into the vehicle's cassette deck. You may need to turn on your vehicle's stereo system in order to do so.

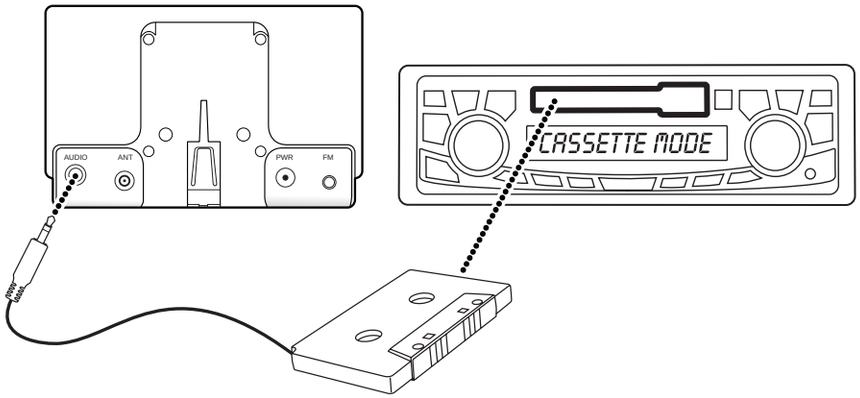

3. If you are using the vent mounting method, attach the Vent Mount to the vehicle vent.
4. Insert your Onyx Plus into the dock.
5. Power on your Onyx Plus by pressing the **Power button**.

   Be sure the vehicle is outside and the antenna has a clear view of the sky. Verify that you are receiving the XM signal. There should be at least two bars in the lower left corner of the main display screen that denotes antenna signal strength. You can also press **menu** and then press **down** to scroll to and highlight **Signal Indicator**. Press the **Select button**. The Satellite and Terrestrial bars show the strength of the signal being received. If the signal reception is good, press and hold **menu** to return to the main display screen.

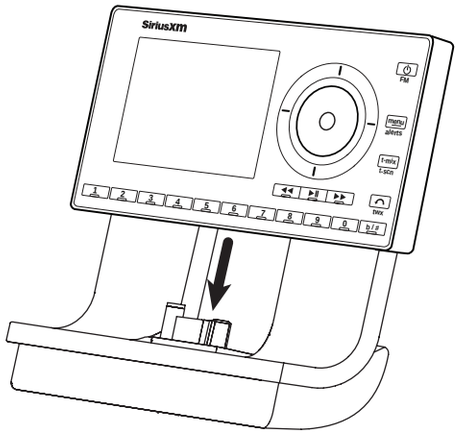

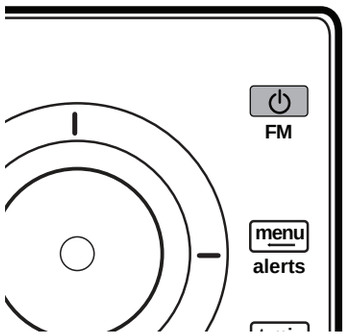

6. Ensure Onyx Plus is tuned to channel 1, the XM Preview channel. Upon power up, Onyx Plus should tune to channel 1 by default, when it's not yet activated. If it's not on channel 1, refer to "Listening to Satellite Radio" on page 51 to learn about how to tune a channel.

7. Turn on your vehicle's stereo system. Set it to play from the auxiliary input source. You should hear XM channel 1 through your vehicle's stereo system. You are now ready to activate your Onyx Plus.

8. Go back to "Step 2: Install the Adhesive or Vent Mount" on page 14 and finish installing the Dash or Vent Mount. Then the installation is complete.

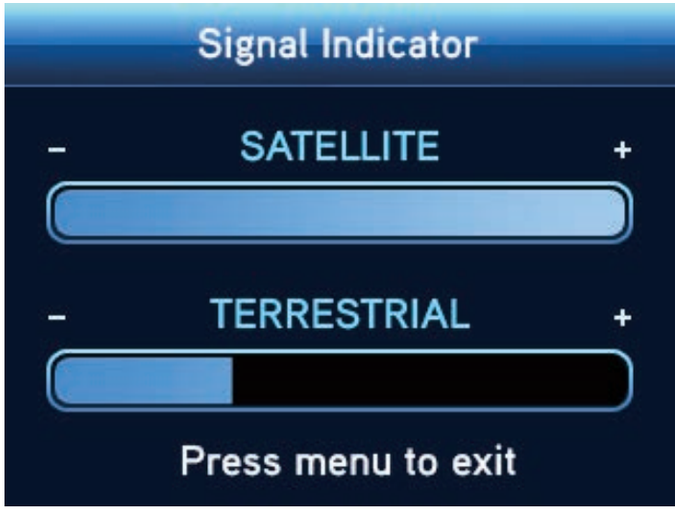

10. The audio level output of Onyx Plus can be increased or decreased as necessary to match the audio levels of other sources in your vehicle. Refer to "Audio Level" on page 112.

If the signal reception is good, showing at least two bars in the lower left corner of the display, but there is no XM audio, be sure the vehicle's stereo system is set to the cassette source (step 4). Also be sure that the audio level is set high enough to be heard (step 5). Refer to "Troubleshooting" on page 125 for additional help.

Option 3: *Power*Connect Installation Instructions

1. If you are using the vent mounting method, attach the Vent Mount to the vehicle vent.

2. Insert your Onyx Plus into the dock.

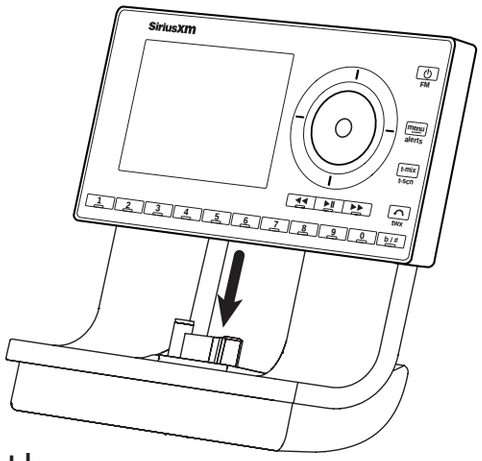

3. Power on your Onyx Plus by pressing the **Power button**.

   Be sure the vehicle is outside and the antenna has a clear view of the sky. Verify that you are receiving the XM signal. There should be at least two bars in the lower left corner of the main display screen that denotes antenna signal strength. You can also press **menu** and then press **down** to scroll to and highlight **Signal Indicator**. Press the **Select button**. The Satellite and Terrestrial bars show the strength of the signal being received. If the signal reception is good, press and hold **menu** to return to the main display screen.

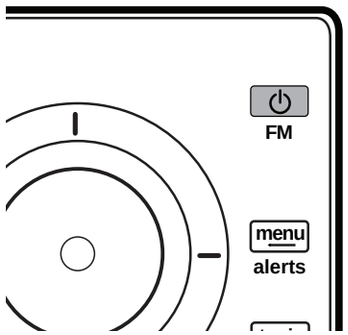

4. You'll first need to find an available FM channel. An available FM channel is one that's not being used by an FM radio station in your area. When you tune your FM radio to an available channel, you should only hear static or silence – not talk or music. We recommend one of the following methods to find an available FM channel:

   a. Use the SiriusXM FM Channel

Finder at **www.siriusxm.com/fmchannel**. Go to the website and enter your zip code. The Channel Finder will suggest a list of available FM channels in your area. For convenience, write down or print out the list.

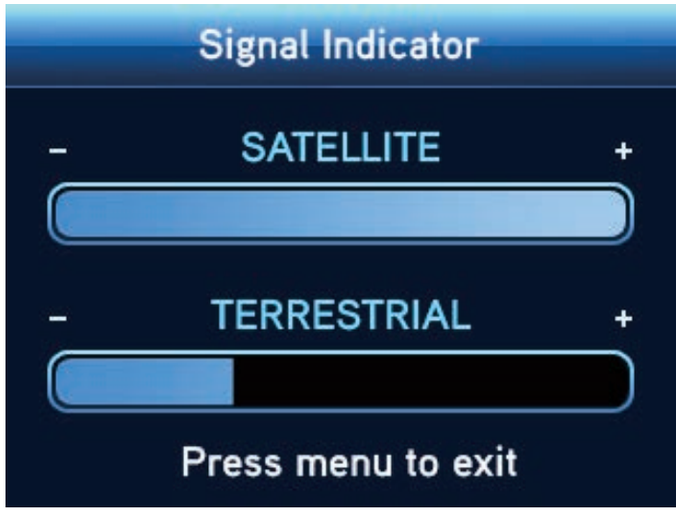

OR

b. Manually tune through your local FM channels on your vehicle's FM radio. Locate and create a list of channels that aren't being used by any FM radio station. Write down the list. Once you have created your list of available FM channels, you will need to find the one that provides the best match for Onyx Plus.

TIP! You'll need to use the 'Manual' tune function on your vehicle's FM radio to tune through every FM channel one-by-one. Turn on your vehicle's FM radio. Start at 88.1 and use the 'Manual' tune function on your vehicle's FM radio to tune through each FM channel one-by-one (88.1 followed by 88.3 etc.) to locate channels that aren't being used by a local FM radio station. Write down each FM channel that has only static or silence on it, until you reach 107.9.

6. Ensure Onyx Plus is tuned to channel 1, the XM Preview channel. Upon power up, Onyx Plus should tune to channel 1 by default, when it's not yet activated. If it's not on channel 1, refer to "Listening to Satellite Radio" on page 51 to learn about how to tune a channel.

7. Pick the first FM channel on your list from step 5. Turn on your vehicle's FM radio (if you have not already done so) and tune it to this FM channel.

NOTE! If you are using the Vehicle Dock from the Universal Xpress Car Kit instead of the *Power*Connect Vehicle Dock which came with your Onyx Plus, you will have to disable AUX Detect. Refer to "Using the Vehicle Dock From the Universal Xpress Car Kit" on page 122, and complete the additional

instructions before continuing with the next step. The audio connection will be through your vehicle's FM radio, but it is not *Power*Connect.

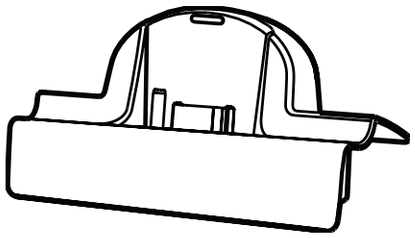

8. Set your Onyx Plus to transmit on the same FM channel that you have selected in step 7:

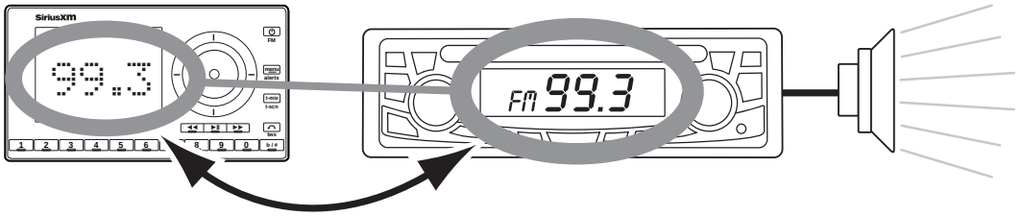

MATCH FM CHANNELS

i. Press **menu**.

ii. Press **down** to scroll to and highlight **FM Settings** and press the **Select button**.

iii. **FM Channels** will be highlighted. If it is not highlighted, press **down** to scroll to and highlight **FM Channels**. Press the **Select button**.

iv. Press **down** to scroll to and highlight the storage location **FM 2** and press the **Select button**.

v. Tune to the available FM channel you choose in step 3. Press **left** (**–** and **right –**) to tune in steps of .2, i.e., 99.3 to 99.5. Press **down** and **up** to tune in steps of 1, i.e., 99.3 to 100.3. Press the **Select button** to select the FM channel.

vi. **Start Using** is highlighted. Press the **Select button.**

vii. The FM channel you selected will be confirmed on the display screen. Onyx Plus will tune to the FM channel.

9. You should hear XM channel 1 through your vehicle's FM radio. If you are satisfied with the sound quality, the installation is complete. You are now ready to activate your Onyx Plus.

10. Go back to "Step 2: Install the Adhesive or Vent Mount" on page 14 and finish installing the Dash or Vent Mount. Then the installation is complete.

11. If the selected FM channel doesn't work well for you, work down the list of FM channels until you find one with which you are satisfied. Each time, you will need to tune your vehicle's FM radio to the FM channel and then set your Onyx Plus to transmit on the same FM channel (steps 7 & 8).

If the signal reception is good, showing at least two bars in the lower left corner of the display, but there is no XM audio, verify that both Onyx Plus and your vehicle's FM radio are tuned to the same FM channel (steps 7 & 8). Also ensure the chosen FM channel is a suitable one to use in your area (step 5). Verify that nothing is plugged into the **AUDIO** connector on the *Power*Connect Vehicle Dock. Refer to "Troubleshooting" on page 125 for additional help.

Option 4: FM Direct Adapter (FMDA) Installation

The FMDA needs to be installed by a professional installer. Professional installation can help improve your Radio's reception and significantly reduce the visibility of wires. To learn more, check with the retailer where you bought your Radio, or go to **www.siriusxm.com/accessories**.

Subscribe

You can follow either the general activation and subscription process or use the on-board activation guide to activate your Onyx Plus and subscribe to the XM service.

General activation and subscription process:

Subscribe to the XM service by following these steps:

1. Make sure your Onyx Plus is turned on, tuned to XM Preview channel 1, and receiving the XM signal so that you can hear the XM audio.
2. Make a note of the XM Radio ID. You can find it:
   - by selecting **Radio ID** in menu items
   - on channel 0 (zero)
   - on a label on the bottom of the gift box
   - on the label on the back of your Onyx Plus

*The phone number shown above may differ from the one shown on your Onyx Plus. All numbers are valid.

NOTE! The XM Radio ID does not use the letters I, O, S, or F.

3. To subscribe:
   - Online: Go to **www.siriusxm.com/activatenow** to access or set up an online account, subscribe to the service, and activate your Radio.

     OR
   - By phone: Call **1-866-635-2349**.

Activation usually takes 10 to 15 minutes after you have completed the subscription process, but may take up to an hour. We recommend that your Radio remain on until subscribed. Once subscribed, the Radio will receive

and you can tune to channels in your subscription plan.

Press **up** or **down** to tune to other channels, and **left** (**–** or **right –**) to browse the different categories of channels. Learn what all the buttons do by turning to “Navigation Basics” on page 48.

Activation guide:

For your convenience, Onyx Plus has an on-board activation guide. You can activate your radio and subscribe to the XM service by using this guide, where you will be guided step-by-step through the subscription process. To access and use the guide, simply follow these steps:

1. Turn Onyx Plus on and press the **menu button**.
2. **Activate Radio** will be highlighted. Press the **Select button**.
3. Follow the directions on each successive screen until you complete the subscription process.

The Main Display

When listening to a channel, information about the channel and what is currently playing is displayed. In addition, other information may also be displayed.

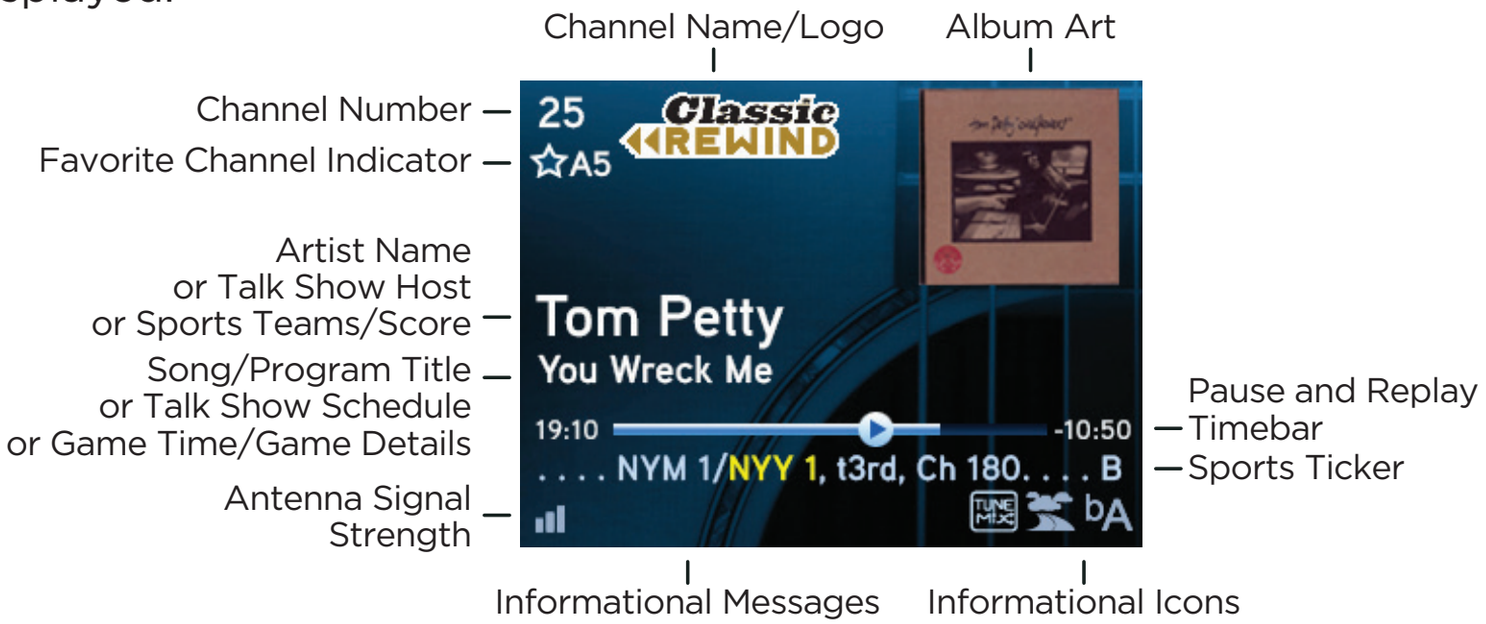

When Enhanced Album Art is on, and you are tuned to a qualified music channel, the display screen will change after five seconds if album art is available.

Navigation Basics

Power/FM Button

Pressing **Power/FM** turns Onyx Plus On or Off. Pressing and holding **Power/FM** provides easy tuning of FM presets for optimized *Power*Connect performance. It is not available when an Aux In Cable or Cassette Adapter is used for the audio connection.

Navigation Buttons

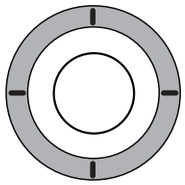

Pressing **Left**, **Right**, **Up**, and **Down** navigates through various features and functions of Onyx Plus.

- **Left (– or Right –) button:** Displays the channel categories such as Rock, Pop, Sports, Talk/News, etc. Repeated presses cycle through the categories one at a time. Also, decreases or increases the settings of various menu options such as Brightness, Audio Level, etc.
- **Up ⊤ or Down ⊥ button (press and release):** Immediately tunes to the next or previous channel in the channel lineup. Also, scrolls through lists and highlights an item in the list.
- **Up ⊤ or Down ⊥ button (press and hold):** Continuously scrolls through any list. While on the main display screen, continuously scrolls through the channel lineup and briefly displays the information of each channel. When the button is released, Radio tunes to the last channel it had scrolled to in the channel lineup.

Select Button

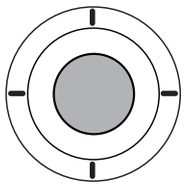

Pressing **Select** selects a highlighted item in a list and confirms settings. When in TuneMix or TuneScan mode, press **Select** to end TuneMix/Scan and continue to listen to the currently tuned channel, or press and hold **Select** to end TuneMix/Scan and return to the channel to which you were tuned before TuneMix/Scan began playing.

Menu/Alerts Button

Pressing **Menu/alerts** displays various options to make setup and feature changes. Pressing **menu/alerts** when in menu options returns to the previous menu option screen until menu options is exited. Pressing and holding **menu/alerts** when in menu options returns to the main display screen in most instances. Pressing and holding **menu/alerts** when at the main display screen prompts to save a song, artist, or game alert if you are tuned to a music channel or sports game where an alert can be saved.

TuneMix/TuneScan Button

Pressing **t-mix/t-scn** puts the radio in TuneMix mode where the radio plays songs songs in a unique mix from the music channels you have saved as smart favorites. Pressing and holding **t-mix/t-scn** puts the radio in TuneScan mode where the radio plays the first 10 seconds of each song that has not been listened to from each of the channels which you have saved as smart favorites.

Jump/twx Button

Pressing **jump/twx** tunes to the previous channel that was playing previous to the currently tuned channel. Pressing it again returns it to the original channel. Pressing and holding **jump/twx** tunes to Traffic and Weather Now for a city of your choice, selected from a list of the 22 most congested cities.

Banks/Direct Button

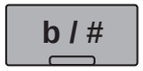

Pressing **b/#** changes the current favorite bank from bank A to bank B, or B to A. Pressing and holding **b/#** prompts for the entry of a channel number using the number buttons. Once the channel number is entered, the Radio directly tunes to the new channel.

Pause and Replay Buttons

Replays up to approximately 60 minutes of stored content from the currently tuned channel, and approximately 30 minutes of stored content from your smart favorite channels as well as from the channel that was tuned immediately previous to the current channel. (Refer to “Favorite Channels” on page 55 for more information about smart favorites.)

▶II plays/pauses, ◀◀ rewinds, and ▶▶ fast-forwards through temporarily stored content.

Note: 60 and 30 minutes are approximate times which may vary depending upon the type of channels and the number of channels saved as smart favorite channels.

Number Buttons

Each number button stores a favorite channel in its button location and provides one touch access to it afterward. Number buttons are also used to enter a channel number after pressing and holding **banks/direct** to directly tune a channel.

Number buttons **1** through **9** are smart favorites while number button **0** is a regular favorite. Smart favorites remember up to approximately 30 minutes of content that played on the smart favorite channel so that when you tune the favorite channel you can rewind up to 30 minutes, or for as long as Onyx Plus has been powered on. Smart favorites are also used for the TuneStart, TuneMix, and TuneScan features.

Listening to Satellite Radio

Tune to a channel:

1. Press and release **up** and **down** to immediately tune to the next or previous channel.
2. Press and hold **up** and **down** to quickly scroll through the channels. Release to tune to the channel that is displayed.

Onyx Plus can be set to tune channels in numerical order, or to tune channels in category order, i.e., pop channels, then rock channels, etc., when channels are tuned using **up** and **down**. Refer to "Channel Tuning" on page 105 to for more information.

View a category:

Channels are organized into categories to make it easier for you to find the ones that suit your taste.

1. To view channels in a category in list mode press **left** (**–** or **right –**).
2. Scroll through the category using **up** and **down**, and find the channel you want to tune.
3. Press the **Select button** to select the channel, or press **left** (**–** or **right –**) to view channels in the previous or next category.

TIP! To briefly listen to each channel in the category, scroll to and highlight Scan at the end of the category list and press the **Select button**. Refer to "Scanning Channels in a Category" on page 57 to learn more about Scan.

Direct Tune

A channel can be tuned directly by entering the channel number using the number buttons.

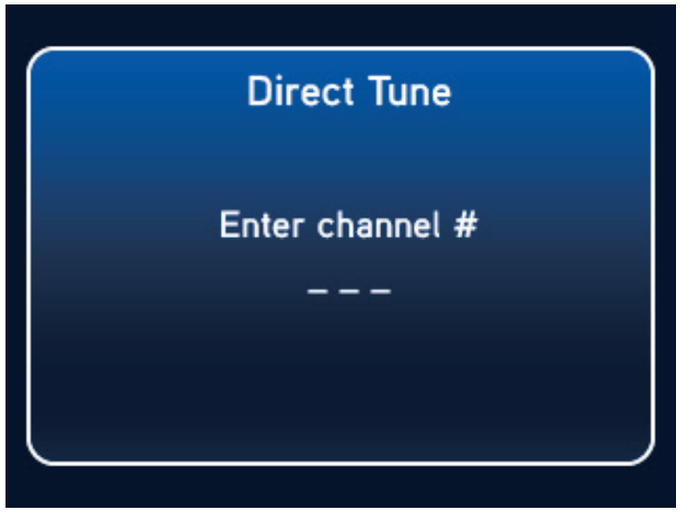

1. To directly tune to a channel press **b/#**.
2. Use the number buttons **0-9** to enter the channel number and wait a moment until the channel is tuned, or press the **Select button** to immediately tune to the channel.

Return to Main Display Screen

Pressing and holding **menu/alerts** in most instances will return you to the main display screen. In some cases, you may need to follow the instructions on the display screen.

Jump and Traffic and Weather Now

Jump

Pressing **jump/twx** (↶) will immediately tune to the previous channel to which you had been listening.

Traffic and Weather Now

Pressing and holding **jump/twx** will tune to a Traffic and Weather Now report for your city. If you had not previously selected the city for your location, you will be prompted to select a city.

The Traffic and Weather Now icon indicates the availability of a Traffic and Weather Now report. If the icon is gray, which may happen when you first turn the Radio on, a report is not yet available. You can still press and hold **jump/twx** so that the radio will begin playing the Traffic and Weather Now report as soon as it becomes available. It's also possible that an partial report is available in which case you can select to listen to the partial report or wait for the whole report.

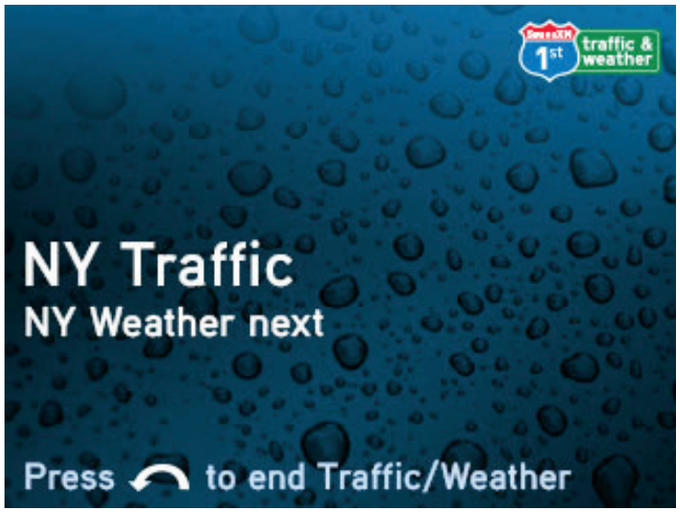

When a new report becomes available the icon will turn blue. You can listen to the report at any time.

When you have listened to the report, or

have partially listened to it, the icon will turn white. When a new report becomes available, the icon will again turn blue. It's also possible that while you are listening to a report, a newer report becomes available, in which case you'll be given the opportunity to listen to the newer report.

Pressing and holding **jump/twx** while a Traffic and Weather Now report is pending will cancel the report. Pressing **jump/twx** after the Radio has tuned to the report will return back to the channel to which you had been listening immediately prior to the Traffic and Weather Now report.

Favorite Channels

You can set up to 20 of your favorite channels (10 in bank A and 10 in bank B) so you can easily access them. Each favorite channel can be assigned to a number button. An icon on the main display screen shows the currently selected bank ᵇA or ᵇB. Change banks by pressing **b/#**.

Number buttons **1** through **9** are smart favorites while number button **0** is a regular favorite. Smart favorites remember up to 30 minutes of content that played on the smart favorite channels so that when you tune a smart favorite channel you can rewind up to 30 minutes. Smart favorites are also used for the TuneStart, TuneMix, and TuneScan features. When you save or replace a smart favorite the confirmation screen will indicate that you are saving or replacing a smart favorite.

Smart favorite channels are indicated on the main display screen by a star icon ☆ to the left of the favorite number.

To assign a favorite channel to a number button:

1. Tune to the desired channel.
2. Select the bank in which you want to save the favorite channel by pressing **b/#**.
3. Press and hold a number button between **0-9** that you want to assign to that favorite channel. An advisory with the channel number and name will be displayed on the screen confirming that the channel has been assigned.

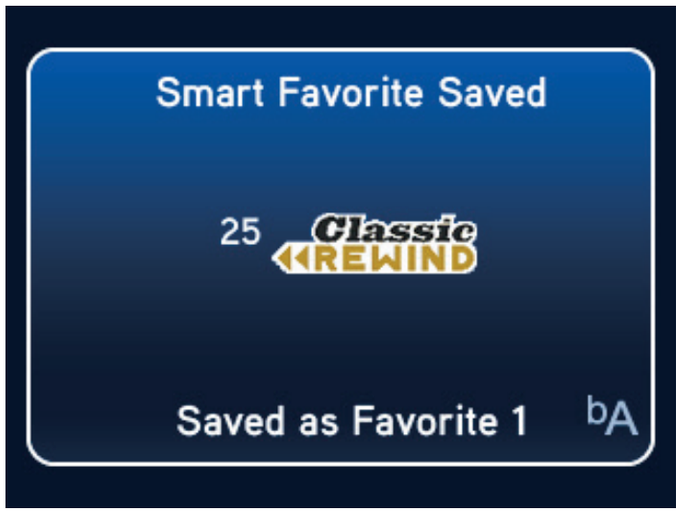

To listen to a favorite channel:

1. Select the bank by pressing **b/#**.
2. Press the number button between **0-9** that was assigned to the desired favorite channel. Onyx Plus will tune to that channel.

TIP! When you are at the main display screen, press **left (–** to see your list of favorite channels. Scroll to highlight a favorite and press the **Select button** to listen to that channel.

To replace a favorite channel:

1. Select the bank by pressing **b/#**.
2. Press and hold the number button between **0-9** that you wish to replace with the currently tuned channel until the advisory message is show.
3. Press **Select button** to replace the favorite, or **menu** to cancel.

Scanning Channels in a Category

You can scan a category and listen to each channel for 10 seconds before Onyx Plus automatically tunes to the next channel. If you want to stay tuned to the channel being played and stop the scan, just press the **Select button**.

To scan a category:

1. Press **left** (**–** or **right –**) until the desired category is displayed.
2. Scroll down using **down** to highlight the last item in the category which will be **Scan** and the category name.
3. Press the **Select button**. The scan will begin.
4. Press the **Select button** to stop the scan, and to continue to listen to the channel currently being played, or press **up** and **down** to return to the channel you were listening to before you began the scan.

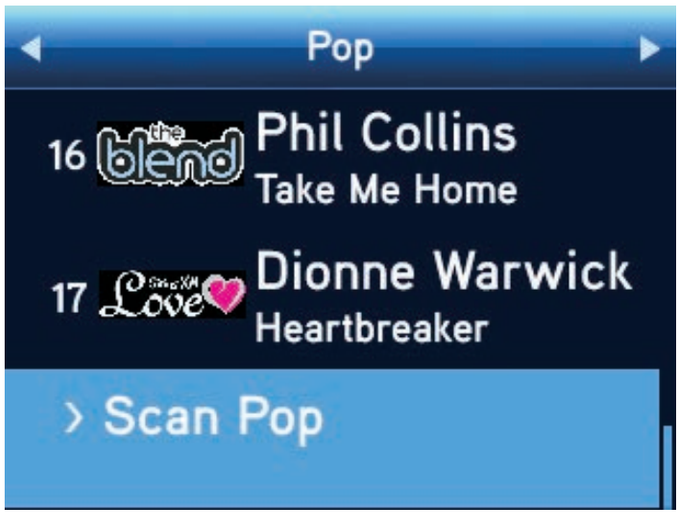

FM Presets

FM presets make it easy to quickly access stored FM channels and choose a new FM channel from them.

Use FM presets when you use *Power*Connect or the FMDA to listen to your Onyx Plus through your vehicle's FM radio. (Refer to "Option 3: PowerConnect Installation Instructions" on page 41 for more information.)

To use a different FM preset:

1. Press and hold **Power/FM** to display the FM Channels list showing the current FM preset.

2. Press **up** and **down** to highlight the FM preset, or use the number keys to select the corresponding FM preset, for example, pressing **3** will select FM3. Press **Select**. The Radio will tune to the selected FM channel. If the preset is the one you want, press **menu** or wait for the confirmation screen to time out.

3. Set your vehicle's FM radio to the same FM channel.

IMPORTANT! You need to ensure that your vehicle's FM radio is tuned to the same FM channel.

TIP! To configure the list of preset FM channels, you need to find available FM channels in your area. Refer to"Find Available FM Channels in Your Area" on page 106. Next, refer to "Set and Select an FM Channel" on page 108.

Album Art and Enhanced Album Art

Onyx Plus can display album art for the currently playing song on qualified music channels. Album art is on by default, but you can choose not to have album art displayed. You can also select an Enhanced Album Art mode where after five seconds the album art is displayed in a larger format.

Album Art is displayed when available. This means that for some songs album art may not be available, some channels may display album art more consistently than others, while other channels may not display album art. Also, if you tune a channel while a song is being played, there may be a delay in displaying the album art, or it may not be displayed at all.

To turn album art on or off:

1. Press **menu**.
2. Press **down** to scroll to and highlight **Feature Settings**. Press the **Select button**.
3. Press **down** to scroll to and highlight **Album Art**.

4. Press the **Select button** to toggle album art on or off.
5. Press and hold **menu** to return to the main display screen.

To select or deselect Enhanced Album Art mode:

1. Press **menu**.
2. Press down to scroll to and highlight **Feature Settings**. Press the **Select** button.
3. Press **down** to scroll to and highlight **Display Mode**.
4. Press the **Select** button to toggle album art to **enh** (enhanced) or **reg** (regular).
5. Press and hold **menu** to return to the main display screen.

Parental Controls

Onyx Plus has a parental control feature which allows you to lock access to individual channels, or lock access to an entire category. A 4-digit code controls access to the locked channel or locked category.

Locked channels are skipped (not shown) if you tune channels using **up** and **down**. When you browse a category, the channel logo and number of the locked channel will be shown but not the artist and song/program information. Instead, a lock icon and the word "**Locked**" is shown.

If you attempt to tune to a locked channel, either by using direct tune or through the category list, you'll be prompted to enter your 4-digit code. When the correct code is entered, you'll be able to tune to and listen to the channel. All locked channels become unlocked and remain unlocked until you turn Onyx Plus Off, and back On. In the category list, the previously locked channels will show an unlocked icon.

To turn Parental Controls On (or Off):

1. Press **menu**.
2. Press **down** to scroll to and highlight **Parental Controls**. Press the **Select button**.
   - <u>**If this is the first time**</u> you want to turn on Parental Controls, **Parental Controls** will be highlighted. Press the **Select button**. You will be prompted to select a 4-digit code:
     i. For each digit, press one of the **0-9** keys (or press **down** or **up**

to select digits) and then press **right –)** to advance to the next digit. (Press **left (–** if you need to go back and edit a previous digit.)

ii. When you have selected all 4 digits of your code press the **Select button**.

iii. The Code Confirmation screen will be displayed. For your records, write down the code you have selected. Press the **Select button**. Continue with step 3.

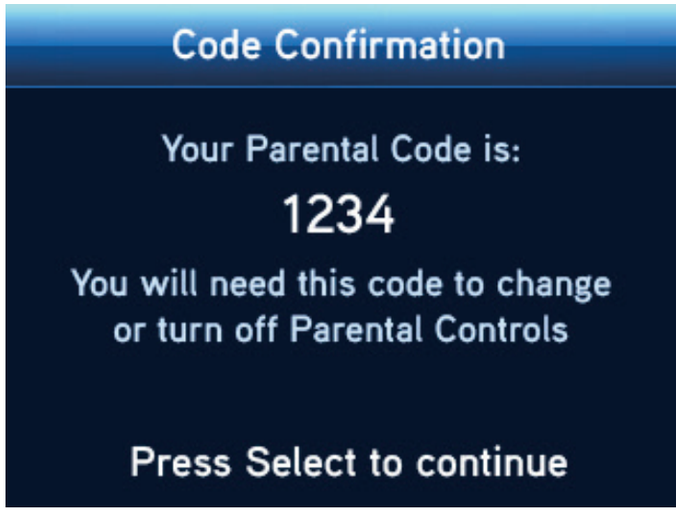

- <u>**If you had previously selected**</u> a 4-digit code you will be prompted to enter your code:

i. For each digit, press one of the **0-9** keys (or press **down** or **up** to select digits) and then press **right –)** to advance to the next digit. (Press **left (–** if you need to go back and edit a previous digit.)

ii. When you have selected all 4 digits of the code press the **Select button**.

3. At the "Parental Controls" screen, **Parental Controls** will be highlighted. Press the **Select button** to turn parental controls on (or press the **Select button** to turn parental controls off).

4. Press and hold **menu** to return to the main display screen.

To lock (or unlock) channels or categories:

1. Press **menu**.
2. Press **down** to scroll to and highlight **Parental Controls**. Press the **Select button**.
3. You will be prompted to enter the 4-digit code. For each digit, press one of the **0-9** keys (or press **down** or **up** to select digits) and then press **right –)** to advance to the next digit. (Press **left (–** if you need to go back and edit a previous digit.)
4. When you have entered all 4 digits of the code press the **Select button**.
5. If **Parental Controls** is shown as off, press the **Select button** to turn it on, otherwise continue with the next step.
6. At the "Parental Controls" screen, Press **down** to scroll to and highlight **Locked Channels**. Press the **Select button**.
7. A list of all the categories and the channels in each category will be displayed. Press **down** or **up** to scroll to and highlight a channel or category you want to lock. Press the **Select button**. A lock icon will be displayed to the left of the channel or category you locked. (To unlock a locked channel or category, simply highlight the locked

Locked Channels

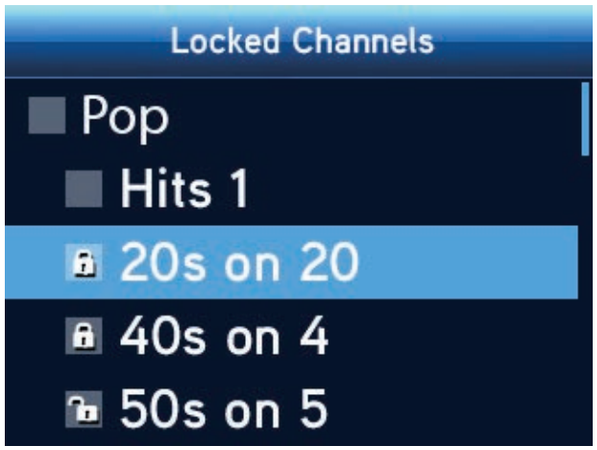

Locked Category

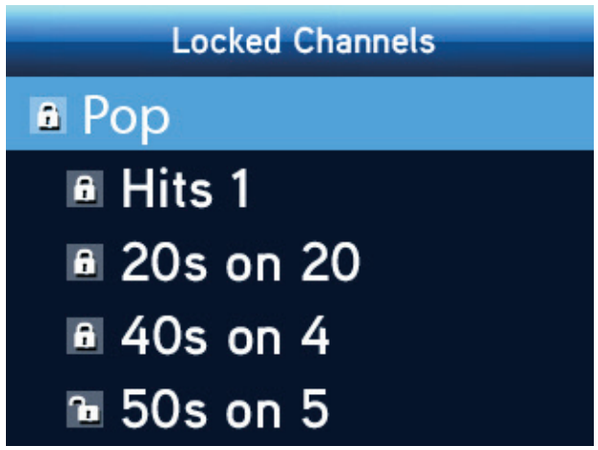

channel or category and press the **Select button**. The lock icon will disappear indicating the channel or category is unlocked.)

8. You can continue to lock and unlock as many channels or categories as you wish. When you are finished, press and hold **menu** to return to the main display screen.

To change your code:

1. Press **menu**.
2. Press **down** to scroll to and highlight **Parental Controls**. Press the **Select button**.
3. You will be prompted to enter your existing 4-digit code. For each digit, press one of the **0-9** keys (or press **down** or **up** to select digits) and then press **right –)** to advance to the next digit. (Press **left (–** if you need to go back and edit a previous digit.)
4. When you have entered all 4 digits of the code press the **Select button**.
5. If **Parental Controls** are shown as off, press the **Select button** to turn it on, otherwise continue with the next step.
6. At the "Parental Controls" screen, Press **down** to scroll to and highlight **Change My Code**. Press the **Select button**.
7. You will be prompted to enter a new 4-digit code. For each digit, press one of the **0-9** (or press **down** or **up** to select digits) keys and then press **right –)** to advance to the next digit. (Press **left (–** if you need to go back and edit a previous digit.)

8. The Code Confirmation screen will be displayed. For your records, write down the code you have selected. Press the **Select button**.
9. Press and hold **menu** to return to the main display screen.

To listen to a locked channel:

There are two ways to tune to a channel which has been locked. The first is to directly tune to the locked channel, and the second is to select the locked channel from a category list.

1. Directly tune to or select the locked channel:

   To directly tune to a locked channel:

   i. Press **direct** and enter the channel number using the **0**-**9** keys.

   To select a locked channel from the category list:

   i. Press **left** (**–** or **right –**) to view the category list of the locked channel to which you wish to tune.

   ii. Press **down** to scroll to and highlight the locked channel. Press the **Select button**.

2 You will be prompted to enter your existing 4-digit code. For each digit, press one of the **0**-**9** keys (or press **down** or **up** to select digits) and then press **left** (**–** to advance to the next digit. (Press **right –**) if you need to go back and edit a previous digit.)

3 When you have entered all 4 digits of the code, press the **Select button**. If your code is correct the channel will be tuned. All locked channels become unlocked and remain unlocked until you turn Onyx Plus Off, and back On. In the category list, the previously locked channels will show an unlocked icon .

TuneMix

TuneMix plays songs in a unique mix from the music channels you have saved as smart favorites, allowing you to build a blended channel from as few as three to as many as 18 music channels.

TuneMix can be configured to play all the music channels saved as smart favorites from favorite channel banks A and B (all channels mode, default), or configured to play only the music channels from the currently selected favorite channel bank (bank mode). If TuneMix is configured as bank, you can create two different listening experiences such as *rock* music in bank A and *pop* music in bank B.

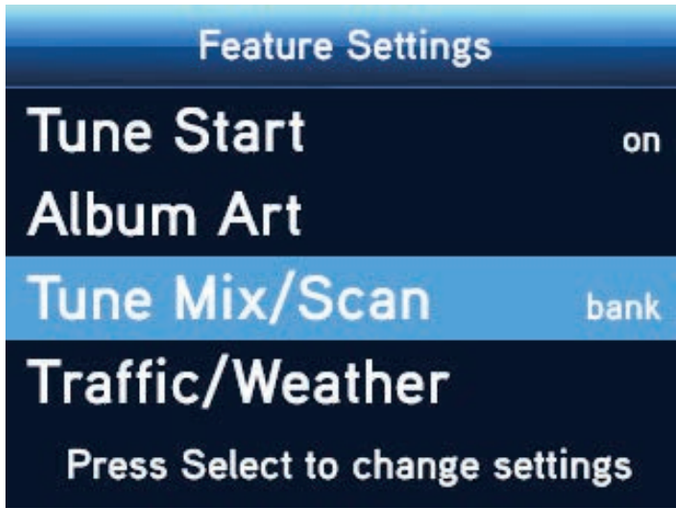

NOTE! When TuneMix is in all channels mode, in addition to the smart favorite channels, it will also include the current channel to which you are tuned, and the immediate previous channel to which you had been tuned, if they were music channels.

Tips for Obtaining the Best Experience from TuneMix

Before using the TuneMix feature, familiarize yourself with the following tips to help you obtain the best experience from TuneMix:

- TuneMix plays songs which have aired on your smart favorite music channels.
- The more music channels you save as smart favorites, the more songs TuneMix will have to play. For best results, save a minimum of three music channels in a bank as smart favorites.

- SiriusXM's programming rights regulate the songs which play in TuneMix. Songs which have played for 30 seconds or longer in TuneMix, or songs which have been skipped three times by pressing ►► may not be played again during the current listening session.
- Certain music channels are not eligible for TuneMix due to the way in which they are broadcast. While these music channels can be saved as smart favorites, they will not be included in TuneMix.

To begin TuneMix:

To use TuneMix, first have to save a minimum of three music channels to smart favorite channel buttons **1** through **9**. (TuneMix does not use favorite channel button **0**.) Refer to "Favorite Channels" on page 55 to learn how to save favorite channels.

Press **t-mix/t-scn** to begin. Onyx Plus will display the TuneMix icon TUNE MIX to show that the radio is in TuneMix mode, and TuneMix will begin playing. Songs that you don't want to listen to can be skipped by pressing ►►.

To end TuneMix:

There are two ways to end TuneMix:

- If you want to end TuneMix and continue listening to the channel that TuneMix is currently playing, press the **Select button**.
- If you want to return to the channel to which you were listening prior to TuneMix, press and hold the **Select button**.

TuneMix will terminate if you tune another channel, if you press **jump** ↶, if you press and hold **t-mix/t-scn** to enter TuneScan mode, or if you press banks/direct (**b/#**) when TuneMix is in bank mode.

To configure TuneMix for Bank or All Channels:

1. Press **menu/alerts**.
2. Press **down** ⊥ to scroll to and highlight **Feature Settings**. Press the **Select button**.
3. Press **down** ⊥ to scroll to and highlight **Tune Mix/Scan**.
4. Press the **Select button** to toggle between **bank** and **all channels**. Note that you are configuring both TuneMix and TuneScan.
5. Press and hold **menu/alerts** to return to the main display screen.

TuneScan

TuneScan plays the first 10 seconds of songs in a unique mix from the music channels you have saved as smart favorites, allowing you to build a virtual channel from as few as three to as many as 18 music channels. While listening to TuneScan, if you hear a song you like simply press the **Select button** to continue listening to the song.

TuneScan can be configured to play from all the music channels saved as smart favorites from favorite channel banks A and B (all channels) (default), or configured to play only the music channels from the favorite channel bank currently selected (bank). If TuneScan is configured as bank, you can create two different listening experiences such as *rock* music in bank A and *pop* music in bank B.

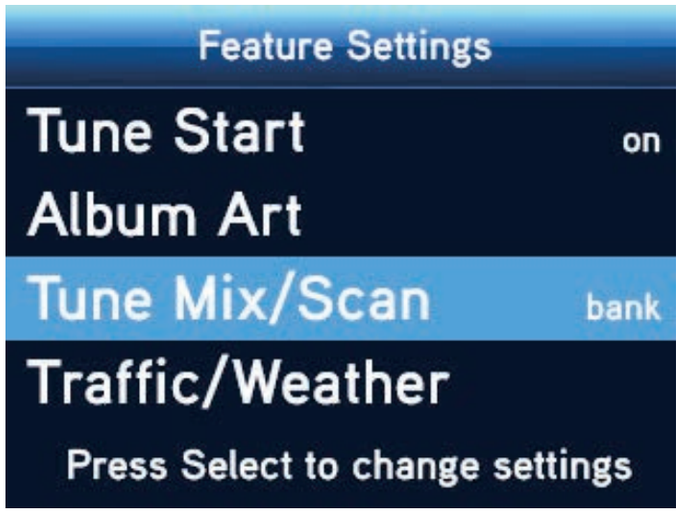

NOTE! When TuneScan is in all channels mode, in addition to the smart favorite channels, it will also include the current channel to which you are tuned, and the immediate previous channel to which you had been tuned, if they were music channels.

Tips for Obtaining the Best Experience from TuneScan

Before using the TuneScan feature, familiarize yourself with the following tips to help you obtain the best experience from TuneScan:

- TuneScan plays songs which have aired on your smart favorite music channels. This means that when Onyx Plus is powered on, it needs a few minutes to accumulate songs to play. If TuneScan has too few songs, it may abort prematurely. For best results, when you first power Onyx Plus

on, wait a few minutes before invoking TuneScan.

- The more music channels you save as smart favorites, the more songs TuneScan will have to play. For best results, save a minimum of three music channels in a bank as smart favorites.
- SiriusXM's programming rights regulate the songs which play in TuneScan. Songs which have been skipped three times may not be played again during the current listening session.
- Certain music channels are not eligible for TuneScan due to the way in which they are broadcast. While these music channels can be saved as smart favorites, they will not be included in TuneScan.
- Entering menu options will end TuneScan. Avoid entering the menu options during TuneScan.

To begin TuneScan:

To use TuneScan you first have to save a minimum of three music channels to smart favorite channel buttons **1** through **9**. (TuneScan does not use favorite channel button **0**.) Refer to "Favorite Channels" on page 55 to learn how to save favorite channels.

Press and hold **t-mix/t-scn** to begin. Onyx Plus will display the TuneScan icon TUNE SCAN to show that the radio is in TuneScan mode, and TuneScan will begin playing. Songs that you don't want to listen to can be skipped by pressing ▶▶, or you can return to the previous song by pressing ◀◀.

To end TuneScan:

There are two ways to end TuneScan:

- If you want to end TuneScan and continue listening to the song that TuneScan is currently playing, press the **Select button**.
- If you want to return to the channel to which you were listening prior to TuneScan, press and hold the **Select button**.

TuneScan will terminate if you tune to another channel, if you press **menu/alerts, jump** ↶, or **play/pause** ▶II, if you press **t-mix/t-scn** to enter TuneMix mode, or if you press banks/direct (**b/#**) when TuneScan is in bank mode.

To configure TuneScan for Bank or All Channels:

1. Press **menu/alerts**.
2. Press **down** ⊥ to scroll to and highlight **Feature Settings**. Press the **Select button**.
3. Press **down** ⊥ to scroll to and highlight **Tune Mix/Scan**.
4. Press the **Select button** to toggle between **bank** and **all channels**. Note that you are configuring both TuneScan and TuneMix.
5. Press and hold **menu/alerts** to return to the main display screen.

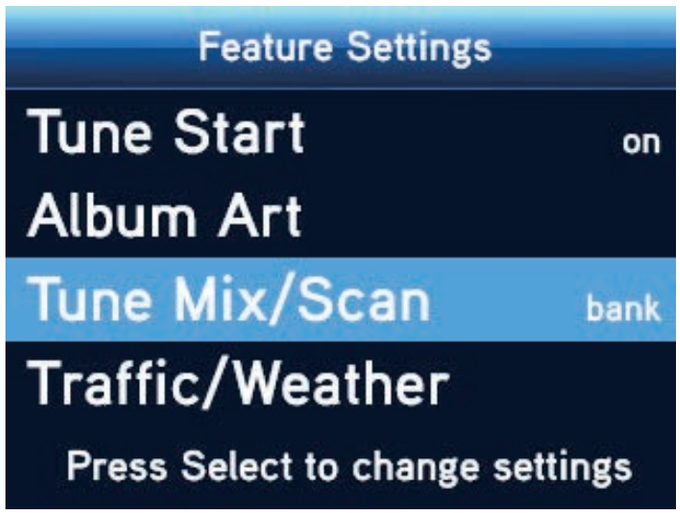

TuneStart

TuneStart plays the current song from the beginning when you tune to a music channel which you have saved as a smart favorite channel. (Refer to “Favorite Channels” on page 55 for more information on smart favorite channels.) A TuneStart will also occur if you tune back to the channel that was tuned immediately prior to the currently tuned channel, either by pressing **jump** ↶, or by directly tuning the channel. TuneStart is on by default.

When a TuneStart occurs, the main display screen will display the Pause and Replay timebar to indicate that a TuneStart has occurred. Should you wish to return to the live broadcast, press and hold **Play/Pause**.

In order for a TuneStart to occur, the beginning of the song must be present in the TuneStart memory. If Onyx Plus is powered on after a song has already begun to be broadcast, a TuneStart will not be possible for that song.

A TuneStart will only occur once per song. For example, if you tune to smart favorite music channel A1 and a TuneStart occurs, then tune channel B1, and then tune back to channel A1 while the same song is still playing on channel A1, a TuneStart will not occur. However, if you want to hear the song from the beginning, you can always press and release **Rewind** ◀◀ to return to the beginning of the song.

Note: Certain music channels are not eligible for TuneStart due to the way in which they are broadcast. While these music channels can be saved as smart favorites, TuneStart will not occur for these channels.

To turn TuneStart off or on:

1. Press **menu/alerts**.
2. Press **down** to scroll to and highlight **Feature Settings**. Press the **Select button**.
3. **Tune Start** will be highlighted. Press the **Select button** to toggle between **off** and **on**.
4. Press and hold **menu/alerts** to return to the main display screen.

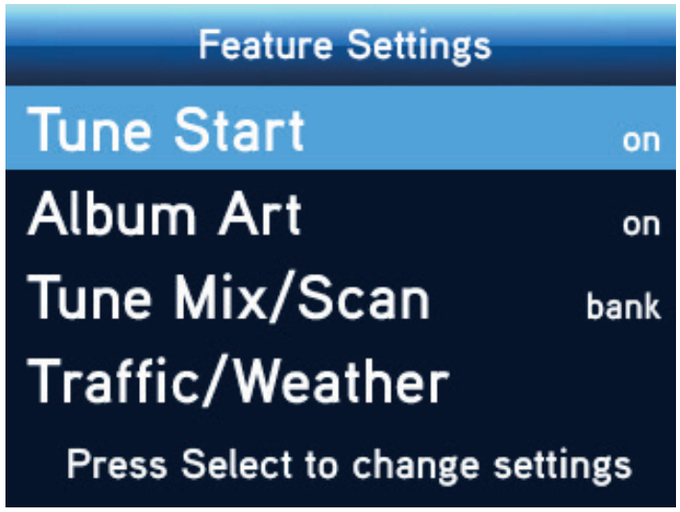

Pause & Replay

Pause & Replay gives you the opportunity to “hear that again” by temporarily storing and then letting you access the stored content. For the currently tuned channel, you can pause and replay for as long as you have been tuned to the channel, up to a maximum of approximately 60 minutes.

You can also Pause and Replay up to approximately 30 minutes from channels which you have saved as smart favorite channels, and also from the channel that was tuned immediately prior to the currently tuned channel. (Refer to “Favorite Channels” on page 55 for more information on smart favorite channels.) Pressing ▶II or ◀◀ places the Radio into Pause & Replay mode.

TIP! Turning Onyx Plus off removes the temporarily stored content from the Radio.

To Play/Pause:

1. Press and release ▶II to pause the live broadcast. At this point the Radio will mute and continue to store live audio.
2. Pressing and releasing ▶II again will begin playing stored audio from the point at which the Radio was paused.

TIP! Pressing **left** (– (or pressing **left** (– twice, if favorite channels are stored) will show the **Replay List**. A listing of artist names and song or show titles are shown for the stored audio from most recent to oldest, beginning with entry called “Go to Live”. Press **down** and **up** to scroll to and

highlight a song or program and press the **Select button** to play it. Choosing **Go to Live** exits Pause & Replay mode and resumes playing the live broadcast.

To listen to the previous track:

1. Press and release ◀◀ to rewind to the beginning of the current song or program.
2. Repeated press and releases skips backwards to the start of the previous songs or programs until the beginning of the stored audio is reached. When the beginning is reached, playback automatically begins.

TIP! Pressing and holding ◀◀ rewinds through stored audio in 5 second intervals, which increases to 15 and then 30 second intervals the longer the button is pressed. Playback begins when the button is released. If the beginning of the stored audio is reached, playback automatically begins.

To listen to the next track:

1. Press and release ▶▶ to skip forward to the start of the next song or program.
2. Repeated press and releases skips forward to the beginning of the next songs or programs until the end of stored audio is reached. When the end is reached, the Radio will exit Pause & Replay mode and resume playing the live broadcast.

TIP! Pressing and holding ▶▶ advances through the stored audio in 5 second intervals, which increases to 15 and then 30 second intervals the longer the button is pressed. Playback begins when button is released. If end of stored audio is reached, the Radio exits Pause & Replay mode and resumes playing the live broadcast.

To listen to live broadcast:

1. Pressing and holding ▶II while the Radio is in Pause & Replay mode exits Pause & Replay mode and resumes playing the live broadcast.

Song/Artist Alerts

You can set your Onyx Plus to alert you when the following events occur:

- **Song Alert:** Alerts can be set for your favorite songs, so that whenever the song begins to play on any music channel, you will be alerted and given the opportunity to tune to the channel.
- **Artist Alert:** Alerts can be set for your favorite artists, so that whenever a song by that artist begins to play on any music channel, you will be alerted and given the opportunity to tune to the channel.

Song and artist alerts can be saved while you are tuned to a channel where the song or artist is currently playing. Alerts can be set while listening to the live broadcast, while in Pause and Replay mode, and while in TuneMix or TuneScan mode. You can save up to 100 Song and Artist Alerts. If the alert list is full you will be prompted to replace an existing alert.

Alerts are displayed visually and are accompanied by an optional audible alert beep, except when you are not at the main display screen. If you are not at the main display screen, you will hear the audible alert beep (provided it's turned on), but the visual alert will be delayed until you have returned to the main display screen.

While a single alert is displayed, you can press the **Select button** to tune to the channel, or press **menu/alerts** to dismiss the alert, or wait for the alert to time out.

There may be occasions when several Song/Artist Alerts happen simultaneously, and then a list of alerts will be displayed. These multiple

alerts can be a mixture of Song, Artist, Game, and Score alerts, depending upon what alerts you have saved. You can browse through the multiple alerts by pressing **down** or **up** to scroll to and highlight an alert, and press the **Select button** to tune to the channel. Once you have selected an alert from the list, all other alerts in the list are dismissed.

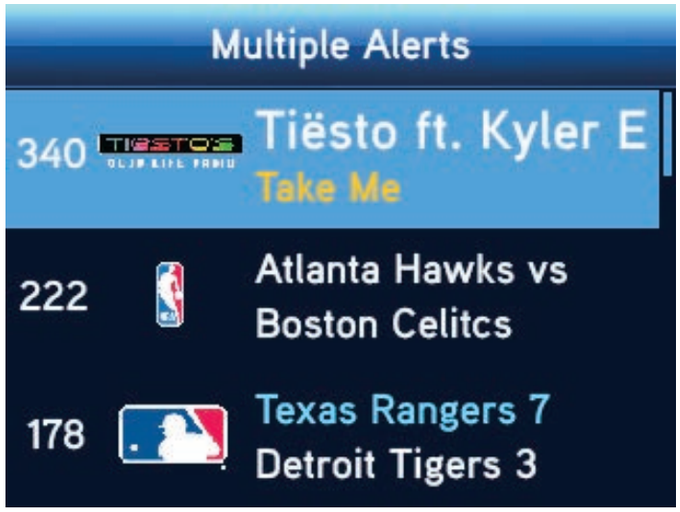

To save a Song or Artist Alert:

1. While the song is playing press and hold **menu/alerts**.

   TIP! You can save an alert for a song or artist that you had listened to previously on the channel. Press ◀◀ to rewind to the song.

2. You will be prompted to select whether to save a Song Alert or an Artist Alert. Highlight your choice by pressing **down** or **up** and press the **Select button**, or press **menu/alerts** to cancel.

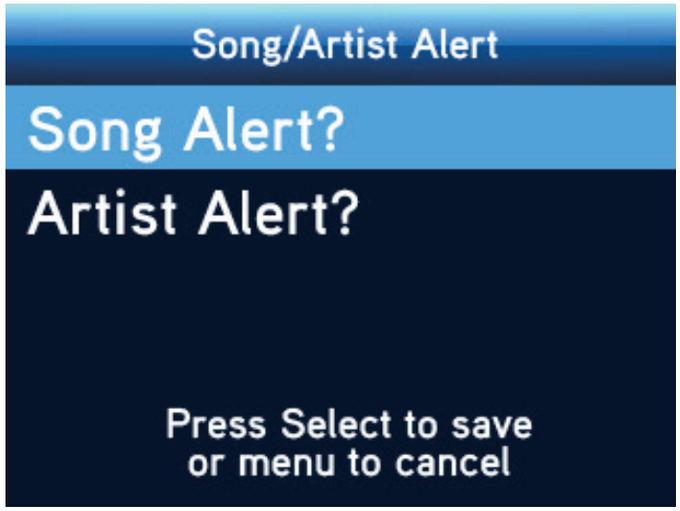

3. A message will confirm that you have successfully saved the alert, and how many alerts you have saved, and how many are still available to save.

   TIP! If you saved an Artist Alert for a song, you will not be able to save a song alert, and the message **Artist Alert Already Saved...** will be displayed. This happens because you will be alerted whenever ***any*** song by that artist begins to play, so it is not necessary to save individual songs by the artist.

To edit Song and Artist Alerts:

Individual Song and Artist alerts can be edited in the following ways:

- **Turn alerts on or off (on/off):** An individual Song or Artist alert can be turned off so you no longer receive an alert, but it is still kept in the alert list so you can turn it back on.
- **Delete alert (del):** Song or Artist alerts can be permanently deleted.
- **Switch alert (sw):** Onyx Plus remembers both the Song and the Artist for each saved alert, although you will only receive an alert for one or the other depending upon which you have selected. Switch provides the ability to turn a Song Alert into an Artist Alert, and an Artist Alert into a Song Alert.

1. Press **menu/alerts**.
2. Press **down** to scroll to and highlight **Alerts**. Press the **Select button**.
3. **Song/Artist Alerts** will be highlighted. Press the **Select button**.
4. Press **down** to scroll to and highlight **Edit Song/Artist Alerts**. Press the **Select button**.
5. From the list of alerts, highlight the alert you want to edit by pressing **down** or **up**. Songs are shown in yellow and artists are shown in blue.
6. Press and release the **Select button** to move through the options and select a setting:

   sw: Switch, to switch the alert from an Artist Alert to a Song Alert

and vice versa. Wait 2 seconds for the confirmation screen to appear and press the **Select button** to confirm the switch or press **menu/alerts** to cancel.

del: Delete the alert. Wait 2 seconds for the confirmation screen to appear and press the **Select button** to confirm the deletion or press **menu/alerts** to cancel.

off: Turn the alert off, but keep it in the list.

on: Turn an alert which had previously been turned off back on.

7. Press and hold **menu/alerts** to return to the main display screen.

To turn all Song and Artist Alerts on or off:

You can turn all Song or Artist Alerts on or off without deleting the saved alerts. If you turn them off, you will no longer receive Song or Artist alerts.

1. Press **menu/alerts**.
2. Press **down** to scroll to and highlight **Alerts**. Press the **Select button**.
3. **Song/Artist Alerts** will be highlighted. Press the **Select button**.
4. **Song/Artist Alerts** will be highlighted. Press the **Select button** to toggle the alerts on or off.

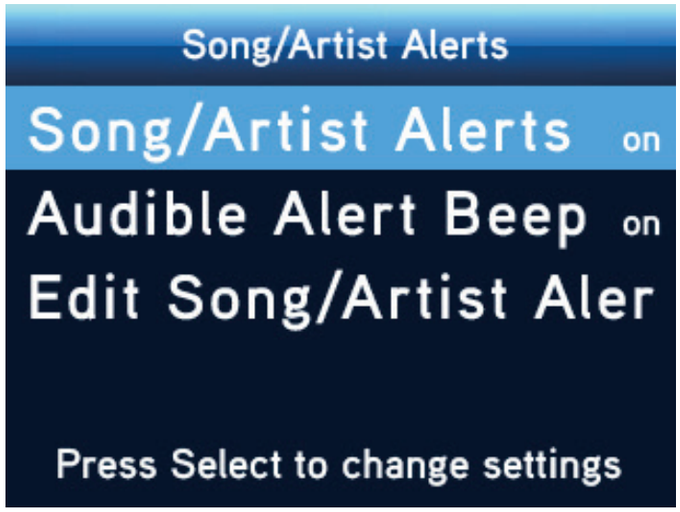

5. Press and hold **menu/alerts** to return to the main display screen.

To turn the audible alert beep on or off:

If you do not wish to hear an audible alert beep when a Song or Artist Alert occurs, you can turn it off. You will still continue to receive the visual alert.

1. Press **menu/alerts**.
2. Press **down** to scroll to and highlight **Alerts**. Press the **Select button**.
3. **Song/Artist Alerts** will be highlighted. Press the **Select button**.
4. Press **down** to scroll to and highlight **Audible Alert Beep**. Press the **Select button** to toggle the alerts on or off.
5. Press and hold **menu/alerts** to return to the main display screen.

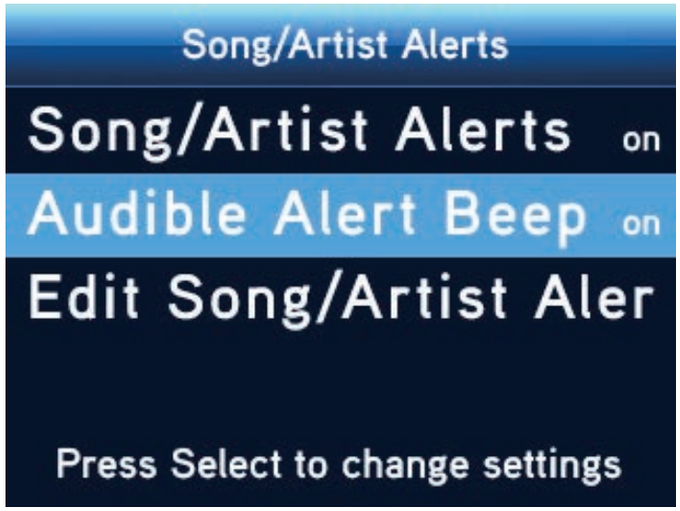

Game/Score Alerts

If your subscription package includes the play-by-play sports channels for your desired sports leagues, and SiriusXM broadcasts the games, you can set your Onyx Plus to alert you when the following events occur:

- **Game Alert:** Alerts can be set for your favorite sports teams so that whenever SiriusXM begins broadcasting a game in which your favorite sports team is playing, you will be alerted and given the opportunity to tune to the game.
- **Score Alert:** When you set a Game Alert for your favorite sports teams, a Score Alert is automatically set also. If you are not listening to the game, you will be alerted each time there is a new score in the game, and given the opportunity to tune to the game. Score Alerts can be turned off if you do not wish to receive them.

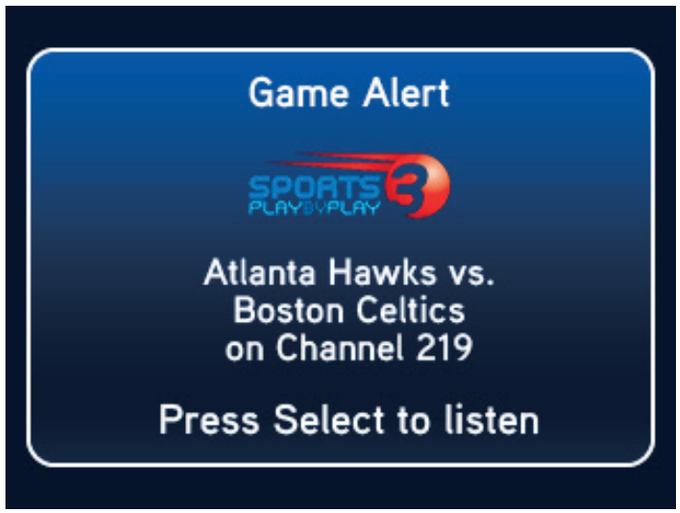

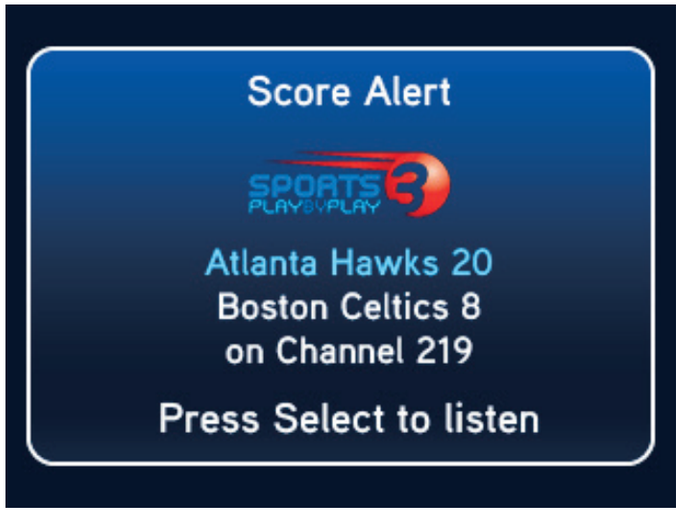

IMPORTANT! A subscription package which includes the play-by-play sports channels of the desired leagues is required. For example, if you selected an alert for an NFL team, and your subscription package did not include NFL play-by-play sports channels, you cannot receive Game or Score Alerts.

We recommend you do not select alerts for teams in a league which are not included in your subscription package. Check your subscription package to confirm that it includes the play-by-play sports channels for the desired leagues before selecting any teams for alerts in the leagues.

Game/Score Alerts can be saved while you are tuned to a channel where a game is being broadcast, or you can preselect teams through the menu options. There is no limit on the number of sports teams which can be saved for Game/Score Alerts.

Alerts are displayed visually and are accompanied by an optional audible alert beep, except when you are not at the main display screen. If you are not at the main display screen, you will hear the audible alert beep (provided it's turned on), but the visual alert will be delayed until you have returned to the main display screen.

When a single alert is displayed, you can press the **Select button** to tune to the channel, or press **menu/alerts** to dismiss the alert, or wait for the alert to time out.

There may be occasions when several Game/Score Alerts happen simultaneously, and then a list of alerts will be displayed. These multiple alerts can be a mixture of Game, Score, Song, and Artist alerts, depending upon what alerts you have saved. You can browse through the multiple alerts by pressing **down** or **up** to scroll to and highlight an alert, and press the **Select button** to tune to the channel. Once you have selected an alert from the list, all other alerts in the list are dismissed.

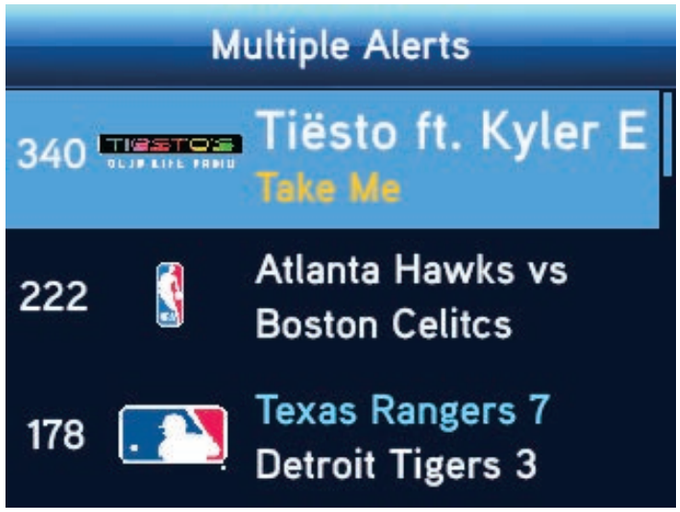

Tips for Obtaining the Best Experience With Game/Score Alerts

Before selecting teams for Game/Score Alerts, familiarize yourself with the following tips to help you obtain the best experience with Game/Score Alerts:

- Game and Score Alerts normally do not occur if you are tuned to the channel which is broadcasting the game in which the selected team is playing. However, it's possible that the same game may be broadcast on multiple SiriusXM channels simultaneously. If so, you will receive Game Alerts for the other channels where the game is being broadcast. You can temporarily turn off Game Alerts if desired (page 88).
- For a given sport, during the season it is likely that SiriusXM will be broadcasting several games simultaneously. This will result in Game Alerts when each game begins, and Score Alerts throughout the games. For sports where scores are frequent, you may find constant Score Alerts to be disruptive. You can temporarily turn off Score Alerts if you find them to be disruptive (page 88).
- Avoid selecting all teams in a league for alerts. Select only those teams you are most interested in following.
- Use the Sports Ticker instead of Score Alerts to keep up with scores.

To save a team for Game/Score Alert while listening to a game:

1. While tuned to the channel where the game is being broadcast press and hold **menu/alerts**.
2. You will be prompted to select the team for the Game/Score Alert. Highlight your choice by pressing **down** ⊥ or **up** ⊤ and press the **Select button**, or press **menu/alerts** to cancel.
3. The next screen will highlight the team you have selected, with the **Alert** box highlighted in blue with white letters.

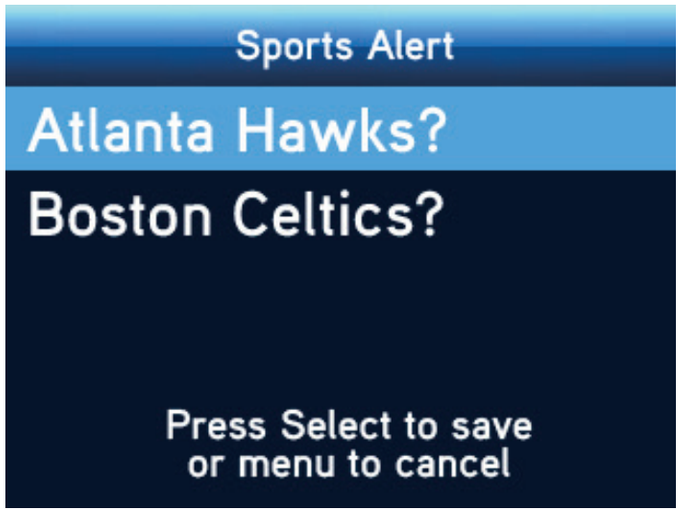

Press the **Select button** to select the team for Game/Score Alerts. The text will change from white letters to black letters to indicate the teams has been selected for Game/Score Alerts.

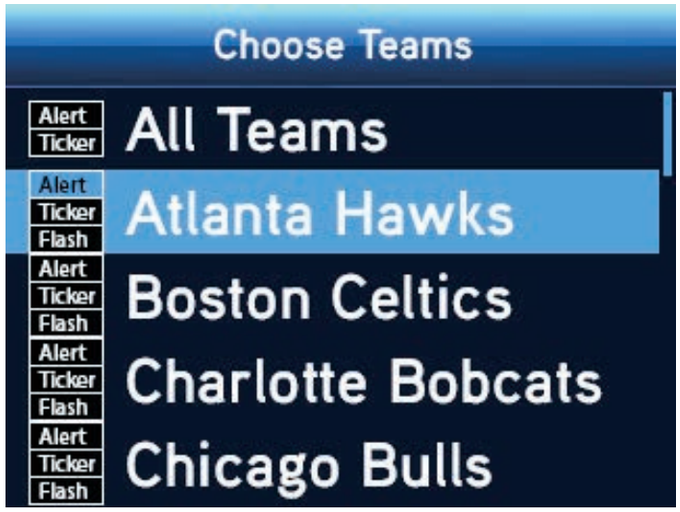

4. If you also want to add the team to the Sports Ticker, or for SportsFlash alerts, press **down** and press the **Select button.**
5. Press and hold **menu/alerts** to return to the main display screen.

TIP! Read steps 6 and 7 on page 85 to learn more about the **Alert**, **Ticker**, and **Flash** boxes, and how they show the selected teams.

To preselect (or deselect) teams for Game/Score Alerts:

1. Press **menu/alerts**.
2. Press **down** to scroll to and highlight **Alerts**. Press the **Select button**.
3. Press **down** to scroll to and highlight **Sports Alerts/Ticker**. Press the **Select button**.
4. Press **down** to scroll to and highlight **Choose Teams**. Press the **Select button**.
5. Press **down** to scroll to and highlight the league. Press the **Select button**.

6. Each team has three selections to the left of the team name, an **Alert**, **Ticker**, and **Flash** box. (Refer to "Sports Ticker" on page 89 for more information about the Sports Ticker, and "SportsFlash" on page 95 for more information about SportsFlash.) Pressing and releasing **down** or **up** navigates through each **Alert**, **Ticker** and **Flash** box, highlighting the Alert, Ticker, or Flash box in blue. Pressing and holding **down** or **up** navigates through the teams.

The Alert, Ticker, and Flash boxes for teams which are not yet selected are shown with a black background with white letters.

The Alert, Ticker, and Flash box for teams which are highlighted for selection, but not yet selected, are shown with a blue background and white letters.

The Alert, Ticker, and Flash boxes for teams which have been selected are shown with a white background with black letters.

The Alert, Ticker, and Flash box for teams which are highlighted for selection, and have been selected, are shown with a blue background and black letters.

7. Press and hold **down** to scroll to and highlight the team for which you want to set an alert. If necessary, use **down** or **up** to place the blue highlight on an **Alert** box (blue background, white letters) and press the **Select button**. The text in the **Alert** box will change from white to black (blue background, black letters) to indicate that the Game/Score Alert has been selected for the team. Repeatedly pressing the **Select button** toggles the selection of the **Alert** box to select (or deselect) Alert.

TIP! You can select (or deselect) a team for the Sports Ticker or SportsFlash alert in the same way you selected a team for a Game/Score Alert. Simply highlight the box in blue and press the **Select button**.

8. You can continue to select teams for Game/Score Alerts until you are finished. Pressing **menu/alerts** will return you to the previous page if you wish to select teams in other leagues.
9. Press and hold **menu/alerts** to return to the main display screen.

To quickly select (or deselect) all teams in a league for Game and Score Alerts:

All teams in a league can be selected at once for Game/Score Alerts by using the **All Teams** selection at the beginning of the list of teams. **All Teams** can also be used to quickly deselect all teams in a league.

1. Press **menu/alerts**.
2. Press **down** to scroll to and highlight **Alerts**. Press the **Select button**.
3. Press **down** to scroll to and highlight **Sports Alerts/Ticker**. Press the **Select button**.
4. Press **down** to scroll to and highlight **Manage Teams**. Press the **Select button**.
5. Press **down** to scroll to and highlight a league. Press the **Select button**.
6. **All Teams** will be highlighted, and the **Alerts** box will be highlighted in blue.

   To select all teams for Game/Score Alerts: Press the **Select button**. The **Alert** box next to each team will now have a white background with black letters indicating that the teams are selected for alerts.

To deselect all teams for Game/Score Alerts: Press the **Select button** twice. The first press selects all teams and the second press deselects all the teams in the league. The **Alert** box next to each team will have a black background with white letters indicating that no teams are selected for alerts.

7. Press and hold **menu/alerts** to return to the main display screen.

To quickly deselect all teams for Game and Score Alerts:

All teams you had previously selected can be quickly deselected for Game and Score Alerts. Keep in mind that this will also deselect all teams for Sports Ticker and SportsFlash alerts.

1. Press **menu/alerts**.
2. Press **down** to scroll to and highlight **Alerts**. Press the **Select button**.
3. Press **down** to scroll to and highlight **Sports Alerts/Ticker**. Press the **Select button**.
4. Press **down** to scroll to and highlight **Manage Teams**. Press the **Select button**.
5. **Deselect All Teams** is highlighted. Press the **Select button**.
6. Press and hold **menu/alerts** to return to the main display screen.

To turn Game and Score Alerts on or off and setting the audible alert beep on or off:

1. Press **menu/alerts**.
2. Press **down** to scroll to and highlight **Alerts**. Press the **Select button**.
3. Press **down** to scroll to and highlight **Sports Alerts/Ticker**. Press the **Select button**.
4. Press **down** to scroll to and highlight **Manage Alerts**. Press the **Select button**.
5. Press **down** to scroll to and highlight either **Game Alerts** or **Score Alerts**.
6. Press and release the **Select button** to move through the options and select a setting:

   on: The visual alert is on and the audible alert beep is off (default).

   on+beep: Both the visual and audible alert beep are on.

   off: The visual and audible alert beep are off.

7. Press and hold **menu/alerts** to return to the main display screen.

Sports Ticker

Sports Ticker shows status of games in progress including current score, and the final score for games which have ended within the last 24 hours. For games in progress, it also shows the channel number if the game is being broadcast by SiriusXM. The Sports Ticker is displayed on the main display screen, and depending upon how many teams have been selected, the Sports Ticker scrolls across the screen. Whenever a score occurs, the scoring team is shown in yellow in the Sports Ticker.

IMPORTANT! A subscription package which includes play-by-play sports channels is required. To receive all the information, including the channel number on which the game is being broadcast, a subscription package containing the play-by-play channels for that particular league is required. For example, if you selected an NFL team to be displayed on the ticker and your subscription package does not include the NFL play-by-play sports channels, Sports Ticker will not display the channel number on which the game is being broadcast.

Teams can be selected while you are tuned to a channel where a game is being broadcast, or you can preselect teams through menu options. There is no limit on the number of sports teams which can be saved for the Sports Ticker.

Note: It's possible that the game involving the team you have selected for Sports Ticker is being broadcast on multiple SiriusXM channels simultaneously. If so, the Sports Ticker will only display one channel number on which the game is being broadcast.

To save a team for the Sports Ticker while listening to a game:

1. While tuned to the channel where the game is being broadcast press and hold **menu/alerts**.
2. You will be prompted to select the team for the Game/Score Alert. Highlight your choice by pressing **down** or **up** and press the **Select button**, or press **menu/alerts** to cancel.
3. The team you have selected will be highlighted, and the **Alert** box highlighted in blue. Press **down** to highlight **Ticker** in blue with white letters.
4. Press the **Select button** to select the team the Sports Ticker. The text will change from white letters to black letters to indicate the team has been selected for the Sports Ticker.
5. Press and hold **menu/alerts** to return to the main display screen.

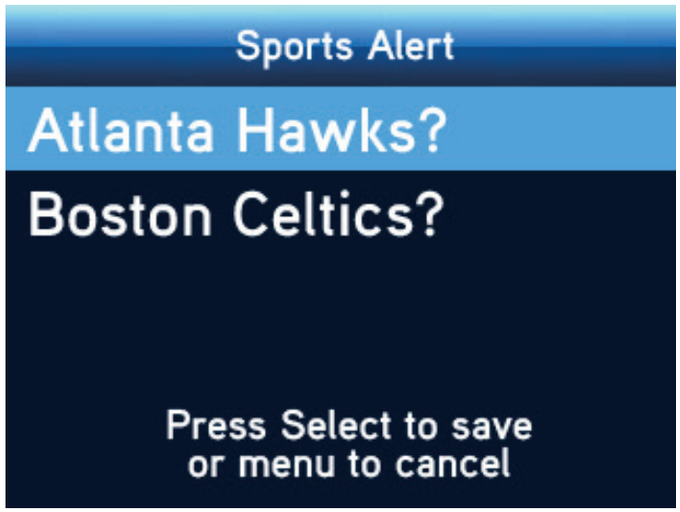

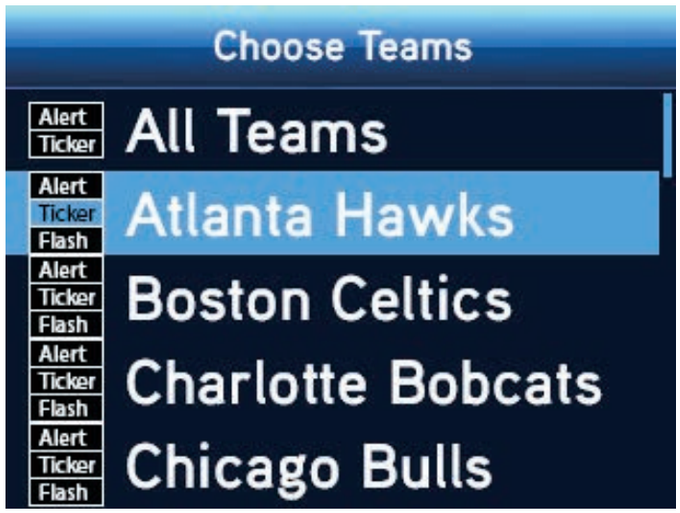

TIP! Read steps 6 and 7 on page 91 to learn more about the **Alert**, **Ticker**, and **Flash** boxes, and how they show the selected teams.

To preselect (or deselect) teams for the Sports Ticker:

1. Press **menu/alerts**.
2. Press **down** to scroll to and highlight **Alerts**. Press the **Select button**.
3. Press **down** to scroll to and highlight **Sports Alerts/Ticker**. Press the **Select button**.
4. Press **down** to scroll to and highlight **Manage Teams**. Press the **Select button**.
5. Press **down** to scroll to and highlight the league. Press the **Select button**.
6. Each team has three selections to the left of the team name, an **Alert**, **Ticker**, and **Flash** box. (Refer to "Game/Score Alerts" on page 81 for more information about Game and Score Alerts, and "SportsFlash" on page 95 for more information about SportsFlash.) Pressing and releasing **down** or **up** navigates through each **Alert**, **Ticker** and **Flash** box, highlighting the Alert, Ticker, or Flash box in blue. Pressing and holding **down** or **up** navigates through the teams.

The Alert, Ticker, and Flash boxes for teams which are not yet selected are shown with a black background with white letters.

The Alert, Ticker, and Flash box for teams which are highlighted for selection, but not yet selected, are shown with a blue background and white letters.

The Alert, Ticker, and Flash boxes for teams which have been selected are shown with a white background with black letters.

The Alert, Ticker, and Flash box for teams which are highlighted for selection, and have been selected, are shown with a blue background and black letters.

7. Press and hold **down** to scroll to and highlight the team for which you want to set an alert. Use **down** or **up** to place the blue highlight on an **Ticker** box (blue background, white letters) and press the **Select button**. The text in the **Ticker** box will change from white to black (blue background, black letters) to indicate that the team is selected for the Sports Ticker. Repeatedly pressing the **Select button** toggles the selection of the **Ticker** box to select or deselect the team.

TIP! You can select (or deselect) a team for a Game/Score alert or SportsFlash alert in the same way you selected a team for a Sports Ticker. Simply highlight the box in blue and press the **Select button**.

8. You can continue to select teams for the Sports Ticker until you are finished. Pressing **menu/alerts** will return you to the previous page if you wish to select teams in other leagues.

9. Press and hold **menu/alerts** to return to the main display screen.

To quickly select (or deselect) all teams in a league for the Sports Ticker:

All teams in a league can be selected at once for the Sports Ticker by using the **All Teams** selection at the beginning of the list of teams. **All Teams** can also be used to quickly deselect all teams in a league.

1. Press **menu/alerts**.

2. Press **down** to scroll to and highlight **Alerts**. Press the **Select button**.

3. Press **down** to scroll to and highlight **Sports Alerts/Ticker**. Press the **Select button**.

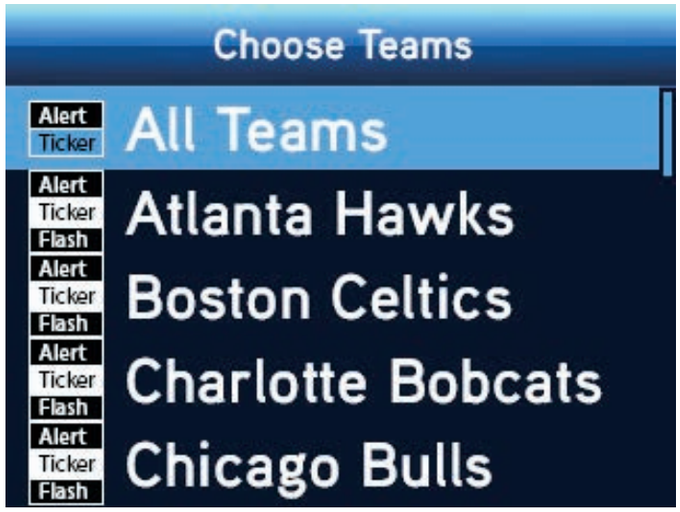

4. Press **down** to scroll to and highlight a league. Press the **Select button**.

5. **All Teams** will be highlighted, and the **Alerts** box will be highlighted in blue. Press **down** to highlight the **Ticker** box in blue.

   To select all teams for the Sports Ticker: Press the **Select button**. The **Ticker** box next to each team will now have a white background with black letters indicating that the teams are selected for alerts.

   To deselect all teams for the Sports Ticker: Press the **Select button** twice. The first press selects all teams and the second press deselects all the teams in the league. The **Ticker** box next to each team will have a black background with white letters indicating that no teams are selected for the Sports Ticker.

6. Press and hold **menu/alerts** to return to the main display screen.

To quickly deselect all teams for Sports Ticker:

All teams you had previously selected can be quickly deselected for Sports Ticker. Keep in mind that this will also deselect all teams for Game and Score alerts and SportsFlash alerts.

1. Press **menu/alerts**.

2. Press **down** to scroll to and highlight **Alerts**. Press the **Select button**.

3. Press **down** to scroll to and highlight **Sports Alerts/Ticker**. Press the

Select button.

4. Press **down** to scroll to and highlight **Manage Teams**. Press the **Select button**.
5. **Deselect All Teams** is highlighted. Press the **Select button**.
6. Press and hold **menu/alerts** to return to the main display screen.

To turn the Sports Ticker on or off:

1. Press **menu/alerts**.
2. Press **down** to scroll to and highlight **Alerts**. Press the **Select button**.
3. Press **down** to scroll to and highlight **Sports Alerts/Ticker**. Press the **Select button**.
4. **Manage Alerts** will be highlighted. Press the **Select button**.
5. Press **down** to scroll to and highlight **Sports Ticker**.
6. Press and release the **Select button** to toggle the Sports Ticker on or off.
7. Press and hold **menu/alerts** to return to the main display screen.

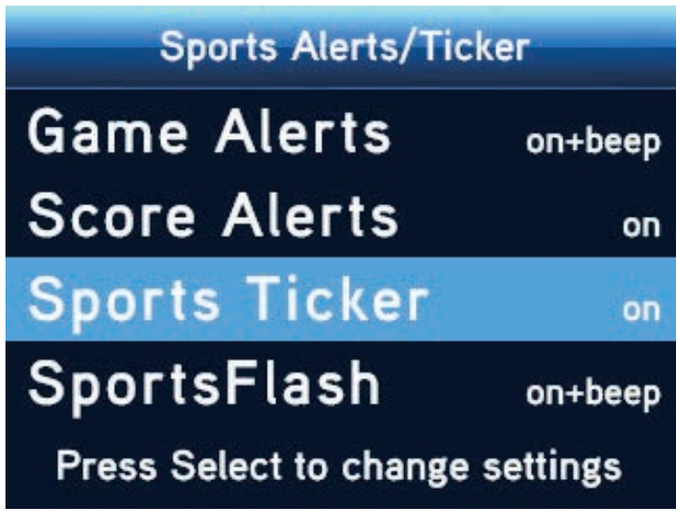

SportsFlash

A SportsFlash is a key play from your favorite teams when a game is being broadcast on SiriusXM. When an exciting play happens, a SportsFlash alert will be displayed and you will have the opportunity to tune to the SportsFlash and hear the play. When the SportsFlash is ended, you can choose to return to the channel you had been listening to prior, or remain tuned to the game.

If your subscription package includes the play-by-play sports channels for your desired sports leagues, you can set your Onyx Plus to alert you when a SportsFlash occurs for the teams you have selected.

IMPORTANT! A subscription package which includes the play-by-play sports channels of the desired leagues is required. For example, if you selected an alert for an NFL team, and your subscription package did not include NFL play-by-play sports channels, you cannot receive SportsFlash alerts.

We recommend you do not select SportsFlash for teams in a league which are not included in your subscription package. Check your subscription package to confirm that it includes the play-by-play sports channels for the desired leagues before selecting any teams for SportsFlash in the leagues.

Up to five teams can be preselected for SportsFlash alerts by using **Manage Teams** in the menu settings. In addition, when a Game Alert occurs for a game not preselected for SportsFlash, you will be given an opportunity to temporarily add the game for SportsFlash alerts, or if five SportsFlash alerts are currently active, replace an active SportsFlash or add it to a queue to become active when one of the currently active games ends.

SportsFlash alerts are displayed visually and are accompanied by an

optional audible alert beep, except when you are not at the main display screen. If you are not at the main display screen, you will hear the audible alert beep (provided it's turned on), but the visual alert will be delayed until you have returned to the main display screen.

When a SportsFlash alert is displayed, you can press the **Select** button to tune to the SportsFlash, press **1** to not receive any more SportsFlash alerts for that particular game, or press **menu/alerts** to dismiss the alert (or do nothing and wait for the alert to time out).

Missed a SportsFlash alert? Alerts are saved in **My Sports Flashes** category for the duration of the SportsFlash. You can listen to a SportsFlash by tapping the SportsFlash in **My Sports Flashes**.

There may be occasions when several SportsFlash alerts will happen simultaneously or shortly after one another. They will each be displayed in order after a selection has been made, or the alert has timed out.

SportsFlash alerts can also be turned off if you do not wish to receive them. Turning the alerts off preserves the teams you have selected for SportsFlash, and does not delete them. They are kept so that when you turn SportsFlash on again, you will still receive SportsFlash alerts for your selected teams.

Tips for Obtaining the Best Experience With SportsFlash:

Before selecting teams for SportsFlash, familiarize yourself with the following tips to help you obtain the best experience with SportsFlash:

- SportsFlash alerts normally do not occur if you are already tuned to the channel which is broadcasting the game in which the selected team is playing. However, it's possible that the same game may be broadcast on multiple SiriusXM channels simultaneously. If so, you will receive SportsFlash alerts for the other channels where the game is being

broadcast. You can temporarily turn off SportsFlash if desired to avoid multiple alerts for the same game.

- SportsFlash alerts are not available for all leagues. When unavailable, you will not be able to add teams for SportsFlash alerts.
- There is a maximum of 5 games that can be simultaneously monitored for SportsFlash. If you already have preselected five teams for SportsFlash alerts, you will have to deselect a team before you can add another team.

Preselecting (and Deselecting) Teams for SportsFlash:

You can preselect up to five of your favorite teams for SportsFlash alerts.

1. Press **menu/alerts**.
2. Press **down** to scroll to and highlight **Alerts**. Press the **Select button**.
3. Press **down** to scroll to and highlight **Sports Alerts/Ticker**. Press the **Select button**.
4. Press **down** to scroll to and highlight **Manage Teams**. Press the **Select button**.
5. Press **down** to scroll to and highlight a league. Press the **Select button**.
6. Each team has three selections to the left of the team name, an **Alert**, **Ticker**, and **Flash** box. (Refer to "Game/Score Alerts" on page 81 for more information about Game and Score

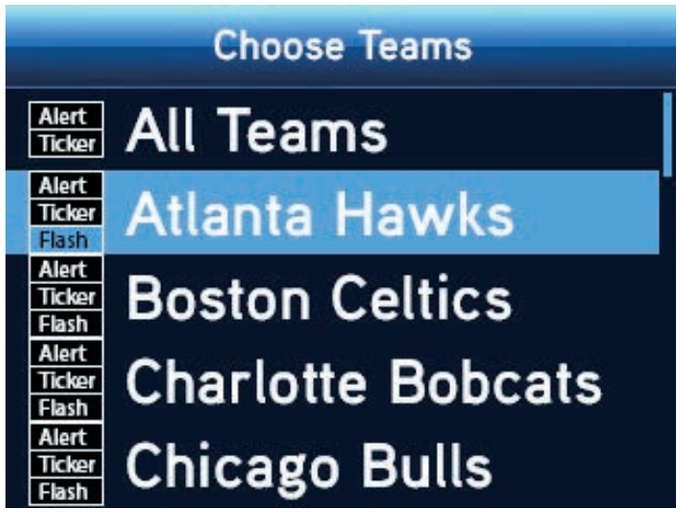

Alerts, or "Sports Ticker" on page 89 for more information about the Sports Ticker.) Pressing and releasing **down** or **up** navigates through each **Alert**, **Ticker**, and **Flash** box, highlighting the Alert, Ticker, or Flash box in blue. Pressing and holding **down** or **up** navigates through the teams.

The Alert, Ticker, or Flash boxes for teams which are not yet selected are shown with a black background with white letters.

The Alert, Ticker, or Flash boxes for teams which are highlighted for selection, but not yet selected, are shown with a blue background and white letters.

The Alert, Ticker, or Flash boxes for teams which have been selected are shown with a white background with black letters.

The Alert, Ticker, or Flash boxes for teams which are highlighted for selection, and have been selected, are shown with a blue background and black letters.

7. Press and hold **down** to scroll to and highlight the team for which you want to set an alert. Use **down** or **up** to place the blue highlight on an **Flash** box (blue background, white letters) and press the **Select button**. The text in the **Flash** box will change from white to black (blue background, black letters) to indicate that the team is selected for the Sports Ticker. Repeatedly pressing the **Select button** toggles the selection of the **Flash** box to select or deselect the team.

TIP! You can select (or deselect) a team for a Game/Score alert or Sports Ticker in the same way you selected a team for a SportsFlash. Simply highlight the box in blue and press the **Select button**.

8. You can continue to select teams for SportsFlash alerts until you are finished. Pressing **menu/alerts** will return you to the previous page if you wish to select teams in other leagues. After you have selected five teams for SportsFlash alerts, you will be unable to select any more.

9. Press and hold **menu/alerts** to return to the main display screen.

Listening to a SportsFlash:

1. When a SportsFlash alert occurs, you will be given the opportunity press the **Select button** to listen to the SportsFlash, press **1** to not receive any more SportsFlash alerts for that particular game, or press the **menu/alerts** button to dismiss the alert. Tap the appropriate button or wait for the SportsFlash alert to time out.

2. If you have selected to listen to the SportsFlash, the channel where the game is being broadcast will be tuned, and the SportsFlash will be played. You can exit the SportsFlash at any time by pressing the **jump** ↶ button.

3. When the SportsFlash has played, Onyx Plus will remain tuned to the game channel. If you want to return to the channel you had been tuned to prior to the SportsFlash, press the **jump** ↶ button.

4. If you decide to continue listening to the game, approximately 5 minutes after the SportsFlash ended, the regular now playing screen will be shown, and the channel will become the currently tuned channel.

Selecting a game for SportsFlash from a Game Alert:

When a Game Alert occurs, you are given the option to tune to the game, or create a temporary SportsFlash for the duration of the game. If five SportsFlash alerts are already active, you can temporary replace an active SportsFlash, or add the game to a queue, to be added for SportsFlash alerts when one of the five active sports flashes ends.

1. When a Game Alert occurs, press the **1** button to add the game for SportsFlash alerts.
2. If there are already five active SportsFlash alerts, you will be advised that the SportsFlash alerts are full. You can replace one of the five active SportsFlash alerts by pressing the **Select button**, or press the **1** button to add the game to the SportsFlash queue.

3. If you selected to replace one of the five active SportsFlash alerts, a list of the active alerts will be displayed. Use **down** or **up** to highlight the alert you want to replace, and press the **Select button**.

To quickly deselect all teams for SportsFlash:

All teams you had previously selected can be quickly deselected for SportsFlash. Keep in mind that this will also deselect all teams for Game and Score alerts and Sports Ticker.

1. Press **menu/alerts**.
2. Press **down** to scroll to and highlight **Alerts**. Press the **Select button**.

3. Press **down** to scroll to and highlight **Sports Alerts/Ticker**. Press the **Select button**.
4. Press **down** to scroll to and highlight **Manage Teams**. Press the **Select button**.
5. **Deselect All Teams** is highlighted. Press the **Select button**.
6. Press and hold **menu/alerts** to return to the main display screen.

To turn Game and Score Alerts on or off and setting the audible alert beep on or off:

1. Press **menu/alerts**.
2. Press **down** to scroll to and highlight **Alerts**. Press the **Select button**.
3. Press **down** to scroll to and highlight **Sports Alerts/Ticker**. Press the **Select button**.
4. Press **down** to scroll to and highlight **Manage Alerts**. Press the **Select button**.
5. Press **down** to scroll to and highlight **SportsFlash**.
6. Press and release the **Select button** to move through the options and select a setting:

on: The visual alert is on and the audible alert beep is off (default).

on+beep: Both the visual and audible alert beep are on.

off: The visual and audible alert beep are off.

7. Press and hold **menu/alerts** to return to the main display screen.

Where Else Can You Use Your Onyx Plus?

SiriusXM offers a variety of accessories that allow you to adapt your Onyx Plus to your lifestyle and enhance your listening experience. With these accessories, you can effortlessly take your Satellite Radio listening experience from your vehicle to your home or office or on the go — all with a single subscription.

- In Your Home, Office, etc. – With a Home Kit, you can play your Onyx Plus through your existing stereo system or powered speakers.
- In Your Other Vehicles – With Vehicle Kits, you can enjoy your Onyx Plus in other vehicles.
- In Almost Any Location You Like – With a portable Sound System you have the freedom to listen to your Onyx Plus where and when you want, from your kitchen or den, to the office, to outside on the deck, or at a picnic.

For more information on XM accessories or to purchase an accessory, please visit your local retailer or **www.siriusxm.com/accessories**.

Radio ID

Your Onyx Plus has an 8 character alphanumeric ID which uniquely identifies your Radio. This ID is used during the subscription process.

To display the Radio ID:

1. Press **menu/alerts**.
2. **Radio ID** will be highlighted. If it is not highlighted, press **down** to scroll to and highlight **Radio ID**. Press the **Select button**. The Radio ID will be displayed.
3. Press and hold **menu/alerts** to return to the main display screen.

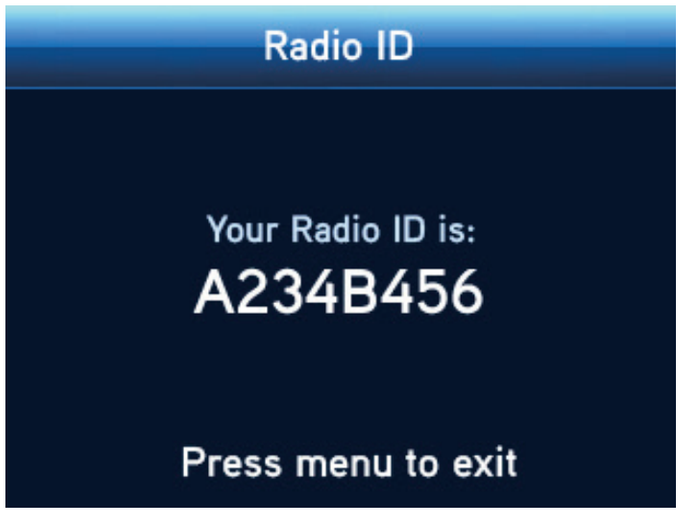

Channel Tuning

Channel tuning controls the way channels are displayed when tuning to channels through the channel line up. There are two different channel tuning modes, Tune by Channel and Tune by Category. The default setting is Tune by Channel.

- **Tune by Channel:** Channels are displayed in ascending or descending numerical order, regardless of their category. The numerical channel numbers are shown when channels in a category are viewed in list mode.
- **Tune by Category:** Channels are grouped and displayed according to their category such as Rock, Pop, Christian, etc., regardless of their numerical channel number. Once you have scrolled through all the channels in a category, the channels in the next category are shown.

To configure Channel Tuning:

1. Press **menu/alerts**.
2. Press **down** to scroll to and highlight **Channel Tuning**. Press the **Select button**.
3. Press **down** to scroll to and highlight **Tune by Channel** or **Tune by Category**. Press the **Select button**.
4. Press and hold **menu/alerts** to return to the main display screen.

FM Settings

Find Available FM Channels in Your Area

Before attempting any of the procedures below, you should park your vehicle in a safe location. Do not attempt to set up your FM channels or any Onyx Plus function while driving.

*Power*Connect allows you to listen to SiriusXM through your existing vehicle radio. You will first need to find an available FM channel, which is a channel that is not being used by an FM radio station in your area. When you tune your vehicle's FM radio to an available channel, you should only hear static or silence – not talk or music.

Once you have found an available FM channel, you'll need to tune Onyx Plus and your vehicle's radio to the same FM channel to receive XM audio through your vehicle's radio.

We recommend one of the following methods to find an available FM channel:

1. **Use the SiriusXM FM Channel Finder**

   Use the SiriusXM FM Channel Finder at **www.siriusxm.com/fmchannel**. Go to the website and enter your zip code. The Channel Finder will suggest a list of available FM channels in your area. For convenience, write down or print out the list.

   Tune Onyx Plus to a favorite XM channel (or to channel 1, if it's not activated). Turn on your vehicle's FM radio. Pick the first FM channel on your Channel Finder list and tune the FM radio to that channel. If you do not hear a local FM station broadcast, then tune Onyx Plus to the same FM channel. (Refer to "Set and Select an FM Channel" on page 108.) You should hear the XM channel through your vehicle's radio. If you are satisfied with the sound quality, you're done! If this FM channel doesn't work well for you, work down the list until you find an FM channel that allows you to hear XM clearly.

OR

2. Manually tune through your local FM channels

Manually tune through your local FM channels on your vehicle's FM radio. Turn on your vehicle's FM radio. Start at 88.1 and use the 'Manual' tune function on your vehicle's FM radio to tune through each FM channel one-by-one (88.1 followed by 88.3 etc.) to locate channels that aren't being used by a local FM radio station. Write down each FM channel that has only static or silence on it, until you reach 107.9. Once you have created your list of available FM channels, you will need to find the one that provides the best match for Onyx Plus.

Tune Onyx Plus to a favorite XM channel (or to channel 1, if it's not activated). Pick the first FM channel on your list and tune the FM radio to that channel. Then tune Onyx Plus to the same FM channel. (Refer to "Set and Select an FM Channel" on page 108.) You should hear the XM channel through your vehicle's radio. If you are satisfied with the sound quality, you're done! If this FM channel doesn't work well for you, work down the list until you find an FM channel that allows you to hear XM clearly.

NOTE! You may find an FM channel with static or silence that does not work with Onyx Plus. It is possible that some type of inaudible interference is present that prevents reception of the XM broadcast. Your only options are to use another FM channel or a different audio connection method.

TIP! If you regularly drive from one location to another, such as your daily commute, you may need to use different FM channels along your route for best performance. If this is the case, we recommend saving the best FM channels as presets on your FM radio and Onyx Plus. Then you simply select and match the best channel for the area you are in.

TIP! It will be much more difficult to find available FM channels in large cities than in most suburban or rural locations. A direct audio connection using the Aux In Cable, Cassette Adapter, or professional installation is your best solution if you drive in or near large metropolitan areas.

NOTE! The SiriusXM FM Channel Finder relies on data from the Federal Communications Commission. The data may not reflect the latest stations in your area. In addition, local geography and weather conditions can impact reception, so your results may be different from the list.

NOTE! The performance of FM radios are different, based on manufacturer and vehicle style. Some may not work well with the type of FM transmitter used by Onyx Plus. This is why we recommend a direct audio connection using the Aux In Cable or Cassette Adapter if they can be used in your vehicle. Professional installation can also resolve almost any performance issue.

Set and Select an FM Channel

Onyx Plus allows you to easily store (i.e., preset) up to 5 different FM channels. At any time, you can select any one of these 5 FM presets to hear SiriusXM through your existing vehicle radio. Having a choice of 5 FM presets also makes it easy to switch to the appropriate FM channel as you travel from one area to another. Each FM preset is stored in its own storage location. You can easily add or edit the FM preset in any one of the 5 storage locations.

IMPORTANT! Onyx Plus and the vehicle's FM radio need to be tuned to the same FM channel in order to hear the audio.

TIP! The FM 1 storage location is preset with FM channel 97.9.

To set and select an FM preset:

1. Press **menu/alerts**.
2. Press **down** to scroll to and highlight **FM Settings** and press the **Select button**.
3. **FM Channels** will be highlighted. If it is not highlighted, press **down** to

scroll to and highlight **FM Channels**. Press the **Select button**.

4. Press **down** to scroll to and highlight the storage location (FM 1 to FM 5) you want to set and press the **Select button**. You can choose among the following options:

i. If the chosen storage location is empty (denoted by "---"), or if the storage location contains the FM preset currently being used (denoted by "current"), then the FM channel tuning screen is displayed.

ii. If the chosen storage location has an FM preset that is not currently being used, and you want to edit it, **Edit Channel** is highlighted. Press the **Select button.** The FM channel tuning screen is displayed.

iii. If the chosen storage location has an FM preset that is not currently being used, and you want to start using it, press to highlight **Start Using** and press the **Select button**. Skip to step 7.

5 Press **left (–** or **right –)** to tune to the desired FM channel in steps of .2, i.e., 99.3 to 99.5. Press **down** or **up** to tune to the desired channel in steps of 1, i.e., 99.3 to 100.3. Press the **Select button** to select the FM channel.

6 If you are editing the storage location that has the "current" FM preset, skip

to step 7. Otherwise, **Start Using** will be highlighted. Press the **Select button**.

NOTE! You can also set an FM preset without having to start using it right away. Just press **menu/alerts** and exit the screen.

7 The chosen FM channel will be confirmed on the display screen and Onyx Plus will tune to that FM channel.

8 Set your vehicle's FM radio to same FM channel.

IMPORTANT! You'll first need to find a suitable FM channel that is unused or available in your area.

To quickly select an FM preset:

1. Press and hold **Power/FM** to display the FM preset list showing the current FM preset.

2. Press **down** or **up** to highlight the FM preset, or use the number keys to select the corresponding FM preset, for example, pressing **3** will select FM3. Press the **Select button**. The Radio will tune to the selected FM channel. If the preset is the one you want, press **menu/alerts** or wait for the confirmation screen to time out.

3. Set your vehicle's FM radio to the same FM channel.

Brightness

The Brightness of the Onyx Plus display can be adjusted for optimal viewing.

To change the brightness of the display screen:

1. Press **menu/alerts**.
2. Press **down** to scroll to and highlight **Brightness** and press the **Select button**.
3. Press **left** (**–** to decrease or **right –**) to increase the brightness of the display.
4. Press the **Select button** to confirm the brightness setting.
5. Press and hold **menu/alerts** to return to the main display screen.

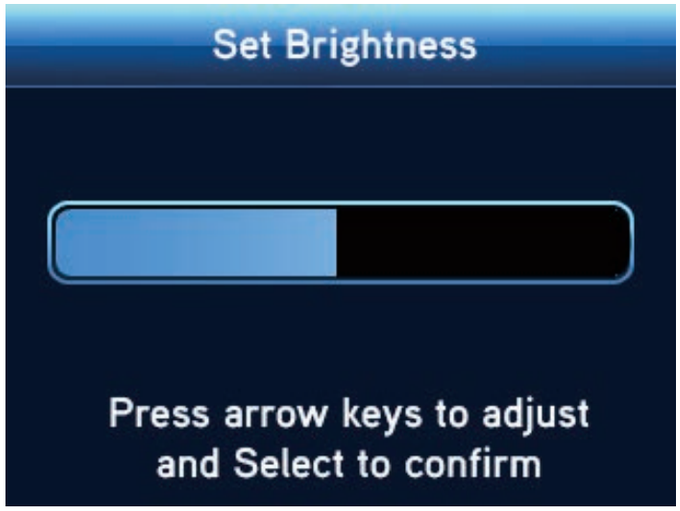

Audio Level

The audio level of Onyx Plus can be adjusted when an audio connection is made between the dock and the vehicle's stereo system. Audio level is used to adjust Onyx Plus's volume level to match the volume of other audio sources you may use, such as a CD player, other FM stations, or an MP3 player.

Do not use the audio level as a volume control. Use the volume control on your vehicle's stereo instead.

To adjust the audio level:

1. Press **menu/alerts.**
2. Press **down** to scroll to and highlight **Audio Level** and press the **Select button**.
3. Press **left** (**–** to decrease or **right –**) to increase the audio level.
4. Press the **Select button** to confirm the new audio level.
5. Press and hold **menu/alerts** to return to the main display screen.

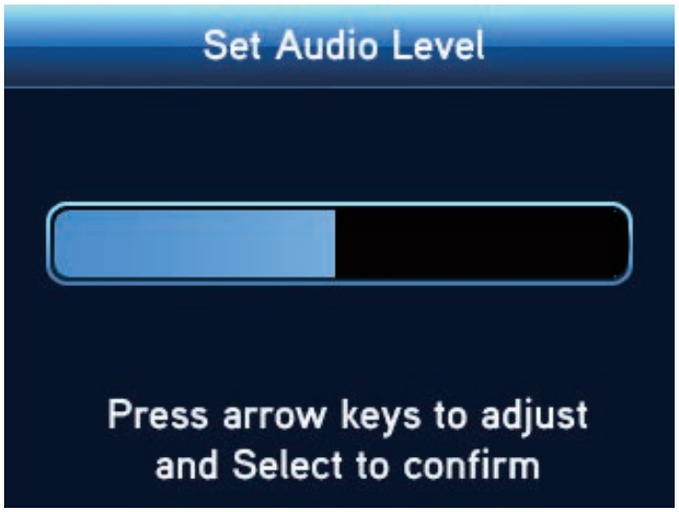

Alerts

Refer to “Song/Artist Alerts” on page 76, “Game/Score Alerts” on page 81, “Sports Ticker” on page 89, and “SportsFlash” on page 95 for detailed information.

Parental Controls

Refer to “Parental Controls” on page 61 for detailed information.

Feature Settings

TuneStart

Refer to “TuneStart” on page 72 for detailed information.

Album Art

Refer to “Album Art and Enhanced Album Art” on page 59 for detailed information.

TuneMix/Scan

Refer to “TuneMix” on page 66 and “TuneScan” on page 69 for detailed information.

Traffic/Weather

Traffic and Weather can be configured for the city of your choice from a list of 22 of the most congested cities. You can also select whether an audible beep on or off occurs when the traffic/weather channel is tuned. Some traffic/weather channels serve multiple cities and if the traffic/weather broadcast of your selected city is not immediately available, a message will

be displayed at the bottom of the screen to indicate that a traffic/weather report is pending. The audible beep will sound when the traffic/weather channel is tuned.

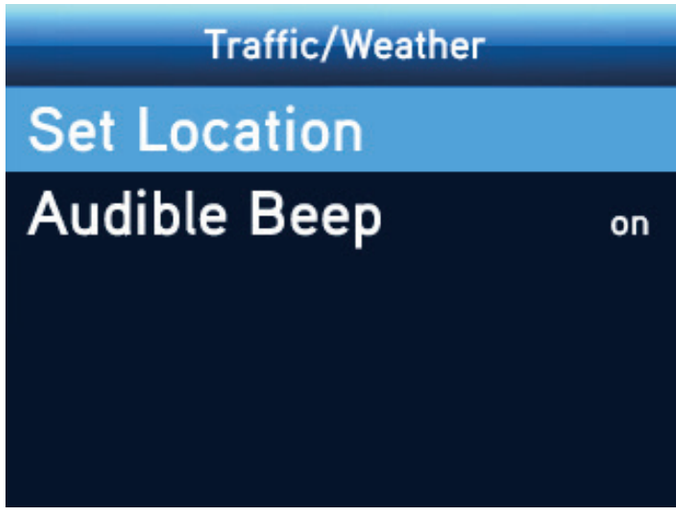

To configure the traffic/weather city:

1. Press **menu/alerts**.
2. Press **down** to scroll to and highlight **Feature Settings** and press the **Select button**.
3. Press **down** to scroll to and highlight **Traffic/Weather** and press the **Select button**.
4. **Set Location** will be highlighted. Press the **Select button**.
5. A list of cities will be displayed. Press **down** to scroll to and highlight your desired location and press the **Select button**.
6. The **Traffic/Weather** screen will display the location you selected. Press and hold **menu/alerts** to return to the main display screen.

To turn the audible beep on or off:

1. When at the Traffic/Weather screen, press **down** to scroll to and highlight **Audible Beep**.

2. Press the **Select button** to toggle the Audible Beep on or off. Press and hold **menu/alerts** to return to the main display screen.

Parental Controls

Refer to “Parental Controls” on page 61 for detailed information.

Signal Indicator

For best reception, your Magnetic Mount Antenna should have an unobstructed view of the XM satellites. In large cities, there are terrestrial transmitters (ground repeaters) to help increase the signal coverage.

Your Onyx Plus can display the strength of the satellite and terrestrial signals being received.

To display the signal strength:

1. Press **menu/alerts**.
2. Press **down** to scroll to and highlight **Signal Indicator** and press the **Select button**.
3. The Satellite and Terrestrial bars show the strength of the signal being received.
4. Reposition the antenna if you are having trouble receiving the signal. Be sure your vehicle is outside with an unobstructed view of the sky.

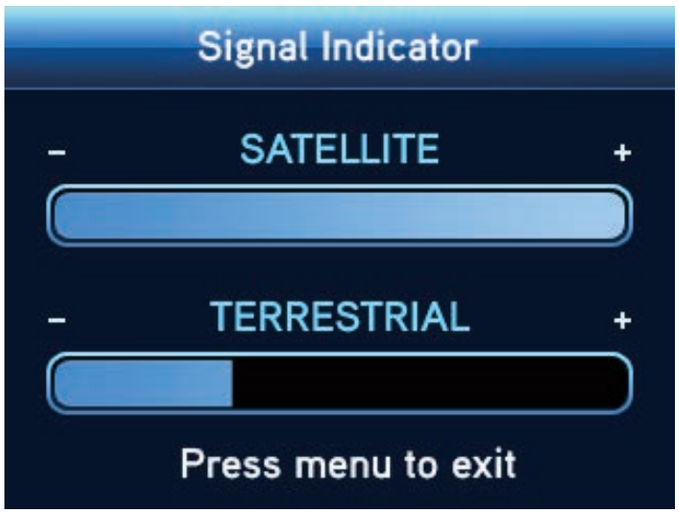

5. Press and hold **menu/alerts** to return to the main display screen.

Auto Shut Off

Onyx Plus will automatically shut off after 8 hours of inactivity, i.e., when no buttons have been pressed. This feature prevents the vehicle battery from being discharged if you forget to turn your Onyx Plus off.

When Onyx Plus is about to shut off, the message **Auto Shut Off**, **Started auto shut off due to inactivity** is displayed, followed by **Press any button to cancel**. If you wish to continue listening, press any button.

To enable or disable Auto Shut Off:

1. Press **menu/alerts**.
2. Press **down** to scroll to and highlight **Auto Shut Off** and press the **Select button**.
3. Repeatedly press the **Select button** toggles between enabled and disabled.
4. Press and hold **menu/alerts** to return to the main display screen.

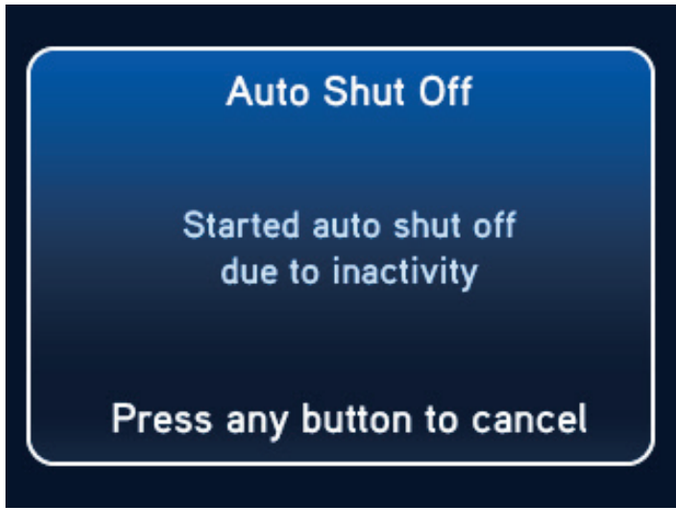

Factory Settings

The factory settings menu has two choices, **AUX Detect** and **Restore Defaults**.

AUX Detect

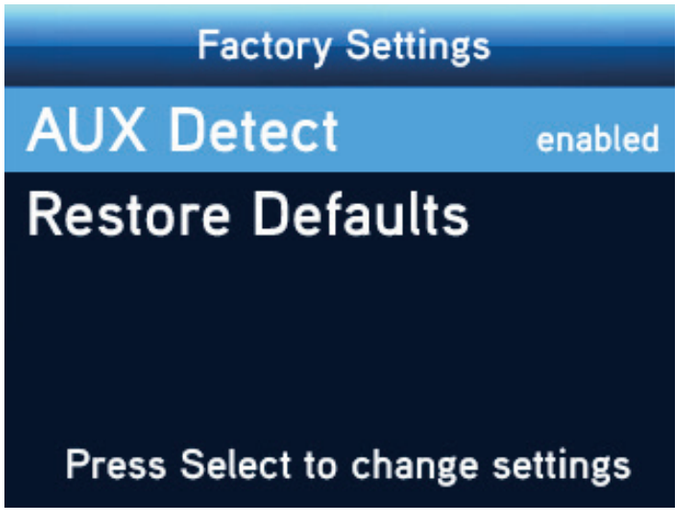

AUX Detect allows Onyx Plus to automatically detect a connection made to the **AUDIO** connector of the *Power*Connect Vehicle Dock by an Aux In Cable or Cassette Adapter. AUX Detect is enabled by default.

IMPORTANT! If you are using the *Power*Connect Vehicle Dock which came with your Onyx Plus, AUX Detect should remain enabled.

If you are using the older model Vehicle Dock from the Universal Xpress Car Kit, and plan to use *Power*Connect or FMDA as the audio connection option, you will need to disable AUX Detect. Please read the additional instructions, “Using the Vehicle Dock From the Universal Xpress Car Kit” on page 122. Once AUX Detect is disabled, you’ll have to turn the FM Transmitter On. Refer to “Turn FM Transmitter On/Off” on page 123.

To disable AUX Detect:

Do this only when using the older model Vehicle Dock:

1. Press **menu/alerts**.
2. Press **down** to scroll to and highlight **Factory Settings** and press the **Select button**.

3. **AUX Detect** should be highlighted and show as enabled. Press the **Select button** to toggle the setting.
4. A warning screen will be displayed. Press the **Select button** to confirm that you want to disable AUX Detect.
5. If you want to cancel press **menu/alerts** to return to **Factory Settings**. AUX Detect will remain enabled.

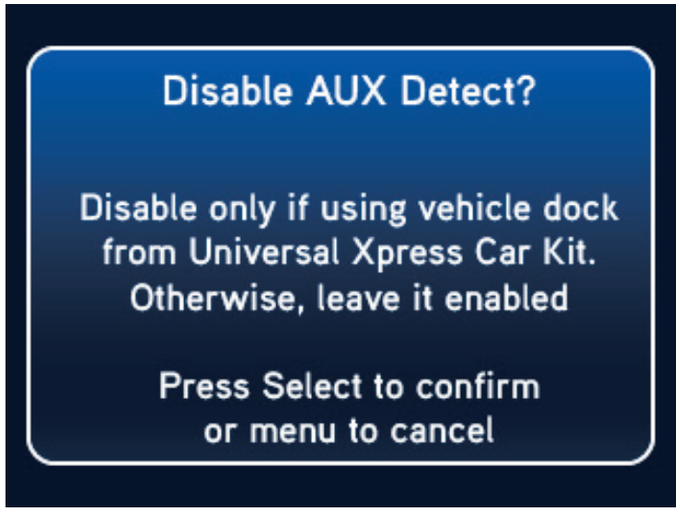

6. AUX Detect will show as disabled. Press and hold **menu/alerts** to return to the main display screen.

To enable AUX Detect

Do this when the Radio is transferred to the *Power*Connect Vehicle Dock from an older model Vehicle Dock:

1. Press **menu/alerts**.
2. Press **down** to scroll to and highlight **Factory Settings** and press the **Select button**.
3. **AUX Detect** will be highlighted and show as disabled. Press the **Select button** again to toggle the setting to enabled.
4. Press and hold **menu/alerts** to return to the main display screen.

Restore Defaults

You can clear all of your personal settings, such as favorite channels, FM presets, etc., and return the Radio to its original out-of-the-box settings.

To reset Onyx Plus to factory defaults:

NOTE! Restoring defaults permanently removes all personal settings.

1. Press **menu/alerts**.
2. Press **down** to scroll to and highlight **Factory Settings** and press the **Select button**.
3. Press **down** to scroll to and highlight **Restore Defaults** and press the **Select button**.
4. A warning screen will be displayed. If you are certain that you want to reset your Onyx Plus to the default settings, press the **Select button** to confirm.
5. If you want to cancel, press **menu/alerts** to return to **Factory Settings**.

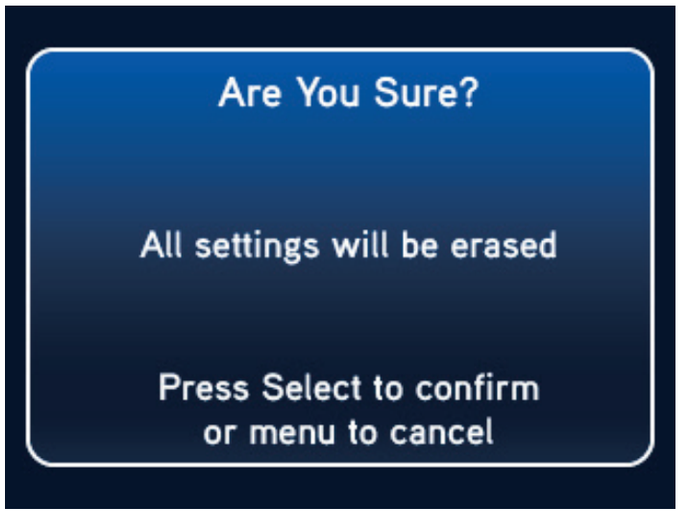

Demo Mode

Your Onyx Plus has a demo mode that starts playing when, for a prolonged period of time (more than 5 minutes), the Radio either detects it's not connected to the antenna, or the antenna stops receiving a signal. It disappears when the antenna is connected properly or when the Radio starts receiving a signal. You can also exit demo mode at any time, by pressing and holding the **Select button** for 10 seconds. If desired, you can also manually put Onyx Plus in demo mode.

The ability for Onyx Plus to enter demo mode is enabled by default. If you don't want Onyx Plus to ever enter the demo mode, you can disable the demo feature. You can enable it again at another time if desired.

To enable or disable the demo mode:

1. Press **menu/alerts**.
2. Press **down** to scroll to and highlight **Demo Mode** and press the **Select button**.
3. **Status** will be highlighted. Press the **Select button** to toggle the setting between enabled or disabled. (Repeatedly pressing the **Select button** toggles between the choices.)

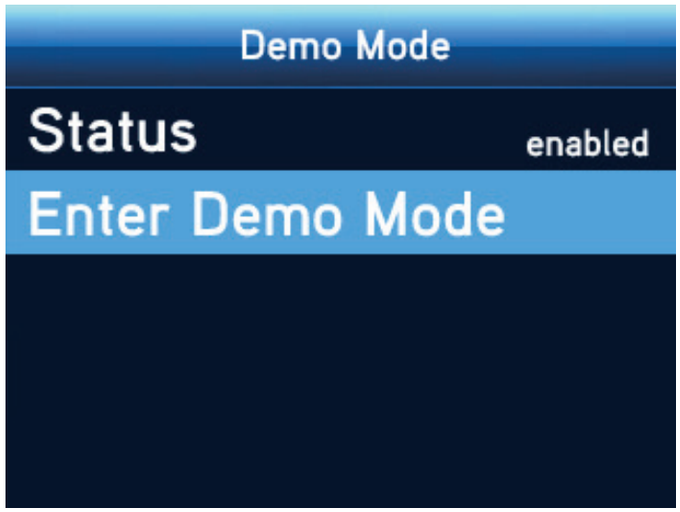

4. If you have selected disabled, press and hold **menu/alerts** to return to the main display screen. If you have selected enabled continue with step 5.

5. Press **down** to scroll to and highlight **Enter Demo Mode** and press the **Select button**. The demo mode will start in 10 seconds.

6. To exit demo mode at any time, press and hold the **Select button** for 10 seconds.

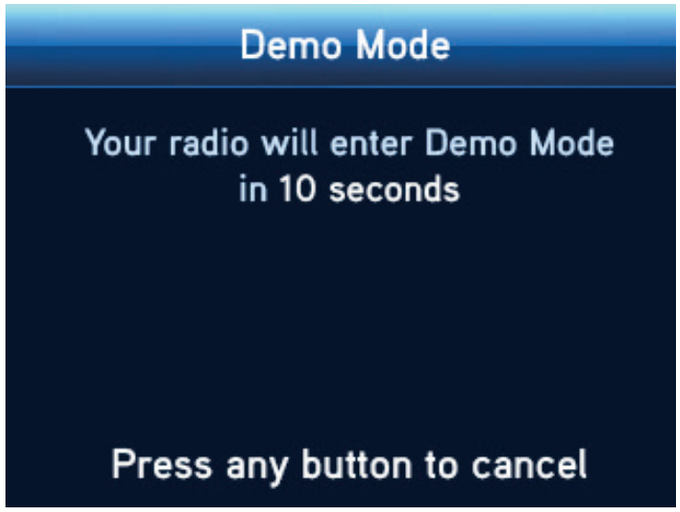

Using the Vehicle Dock From the Universal Xpress Car Kit

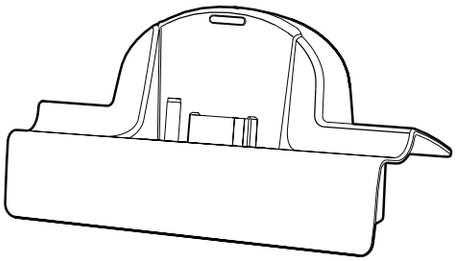

If you have chosen to use the Vehicle Dock from the Universal Xpress Car Kit rather than the *Power*Connect Vehicle Dock included with your Onyx Plus Radio, you will need to complete some additional installation steps. When you have completed these additional steps, you can continue with the installation of your Onyx Plus.

When you are using the Universal Xpress Vehicle Dock, the screen will initially display “AUX Connected” when you power on your Onyx Plus. Ignore this message. Once you have completed the steps below, it will not be displayed again.

If you are connecting the audio through your vehicle’s FM radio (SureConnect or FMDA):

1. Disable the AUX Detect feature. Refer to “AUX Detect” on page 117, and disable AUX Detect.
2. Turn the FM Transmitter in Onyx Plus On. Refer to “Turn FM Transmitter On/Off” on page 123, and turn the FM Transmitter on.
3. Continue with the installation.

If you are connecting the audio using the Aux In Cable or Cassette Adapter:

1. Disable the AUX Detect feature. Refer to “AUX Detect” on page 117, and disable AUX Detect.

   TIP! The FM Transmitter must be off. To verify that the FM Transmitter is off, refer to “Turn FM Transmitter On/Off” on page 123.

2. Continue with the installation.

Turn FM Transmitter On/Off

Turning the FM Transmitter on applies only if you are using the older model Vehicle Dock from the Universal Xpress Car Kit, and plan to use *SureConnect* or FMDA as the audio connection option.

You'll have to turn on the FM Transmitter under the **FM Settings** menu. However, before you can access the **FM Settings** menu, you first need to disable AUX Detect. Refer to "AUX Detect" on page 117. Once you have disabled AUX Detect, the **FM Settings** menu will be accessible.

To turn the FM Transmitter On:

1. Press **menu/alerts**.
2. Press **down** to scroll to and highlight **FM Settings** and press the **Select button**.
3. **FM Transmitter** will be highlighted. Press the **Select button** to toggle the setting from off to on.
4. The **FM Channels** menu item will now be accessible, allowing you to tune Onyx Plus and the FM radio in your vehicle to the same FM channel.

TIP! Onyx Plus is programmed with FM channel 97.9 as the default setting.

To turn the FM Transmitter Off:

If you are using the older model Vehicle Dock from the Universal Xpress Car Kit, and plan to use the Aux In Cable or a Cassette Adapter as the audio connection option, you'll have to turn the FM Transmitter under the **FM Settings** menu in Onyx Plus off, if it was previously turned on.

1. Press **menu/alerts**.
2. Press **down** to scroll to and highlight **FM Settings** and press the **Select button**.
3. **FM Transmitter** will be highlighted. Press the **Select button** to toggle the setting from On to Off.
4. A warning message will be displayed advising you to connect the Aux In Cable. Press the **Select button** to confirm that you want to turn off the FM Transmitter.
5. Press and hold **menu/alerts** to exit.

Troubleshooting

Onyx Plus has been designed and built to be trouble-free but if you experience a problem, try this:

- Check that all connections are firm and secure.
- Make sure the vehicle power socket is clean and free of corrosion.
- Make sure you have connected Onyx Plus as described in this User Guide. Verify that the *Power*Connect Power Adapter is plugged into the vehicle's cigarette lighter or power adapter socket, and that the LED on the *Power*Connect Power Adapter is lit (on). If not, your vehicle may need to be running to provide power to the socket.

If you see this on the screen:	Try this:
Acquiring Signal	• Make sure that the vehicle is outdoors with a clear view of the sky. • Make sure the Magnetic Mount Antenna is mounted outside of the vehicle. • Move the antenna away from any obstructed area. For example, if you are parked in an underground garage, you should receive a signal after leaving the garage.
Check Antenna Connection	• Make sure that the antenna cable is firmly and securely plugged into the *Power*Connect Vehicle Dock. Make sure the cable is not bent or broken. • Turn Onyx Plus Off, then On, to reset this message. • If the message persists, most likely the Magnetic Mount Antenna cable has been damaged. Replace the antenna.
Channel Off Air	• The channel you've selected is not currently broadcasting. Tune to another channel.

If you see this on the screen:	Try this:
Loading	• Your Onyx Plus is acquiring audio or program information This message usually goes away in a few seconds.
Updating	• Your Onyx Plus is updating with the latest encryption code. Wait until the update is done. • You may be trying to tune to a channel that is blocked or unavailable. Tune to another channel.
—	• No program information, such as artist name, song title, or channel exists.
If this happens:	**Try this:**
You do not receive all the channels to which you subscribed	• Ensure that you have subscribed to the service by following the steps in "Subscribe" on page 45. • Go to **www.siriusxm.com/refresh** and follow the directions to refresh your Radio. • Call 1-866-635-2349 for further assistance.
Audio sounds too soft	• Raise the volume of your stereo system or increase the audio level of your Onyx Plus until the sound quality improves. Refer to "Audio Level" on page 112.
No audio when using the Aux In Cable or Cassette Adapter	• Check all cables between your Onyx Plus and your vehicle's stereo system for a firm and secure connection. • Ensure you have selected the proper input source on your vehicle's stereo system. • Increase the audio level of Onyx Plus. Refer to "Audio Level" on page 112. • If you are using the Vehicle Dock that came with the Universal Xpress Car Kit, ensure that the FM Transmitter in Onyx Plus is turned Off.

If this happens:	Try this:
Audio fades or has static when listening	• Check all cables for a firm and secure connection. • If you are using *Power*Connect to listen via your vehicle's FM radio, and the problem persists, it most likely is interference from another commercial or broadcast FM station. You will need to find an unused or available FM channel in your area. Refer to "Find Available FM Channels in Your Area" on page 106. • If you are using *Power*Connect, and you cannot solve the audio problem, try connecting the audio using the Aux In Cable or a Cassette Adapter. (Refer to page 37 and page 39.) If you cannot use those solutions, consider using an FM Direct Adapter. (Refer to page 44.)
No audio when using *Power*Connect or FMDA	• Check that your Onyx Plus and your vehicle's FM radio are tuned to the same FM channel. • For *Power*Connect, ensure you are using the *Power*Connect Vehicle Dock and *Power*Connect Power Adapter. • If you are using the Vehicle Dock that came with the Universal Xpress Car Kit, ensure that the FM Transmitter in Onyx Plus is turned On. Refer to "Turn FM Transmitter On/Off" on page 123.
No song title or artist name is displayed	• The information may not be available or updates may be in progress.
Traffic and Weather channels sound different from other channels	• These channels use a different audio technology than other channels so they often sound different from other channels.

If this happens:	Try this:
The demo is playing	• Your Magnetic Mount Antenna is not connected or you are not receiving the signal. Check that the antenna is connected properly and is not obstructed. • Press and hold the **Select button** for 10 seconds to exit Demo Mode. • You can disable Demo Mode. Refer to “Demo Mode” on page 120.
Game Alerts or Score Alerts are not being shown, not functioning as expected, or displayed incorrectly	A subscription package which includes the play-by-play sports channels for the desired league is required for Game or Score Alerts. We recommend you do not select alerts for teams in a league which are not included in your subscription package. Check your subscription package to confirm that it includes the play-by-play sports channels for the desired leagues before selecting any teams.
Sports Ticker is not being shown, or is not showing the channel number on which the game is being played	A subscription package which includes play-by-play sports channels is required for Sports Ticker. To receive all the Sports Ticker information, including the channel number on which the game is being broadcast, a subscription package containing the play-by-play channels for that particular league is required.

If this happens:	Try this:
TuneMix and TuneScan do not function as expected	There may be several possible reasons: • You have not saved enough music channels as smart favorites. In all channels mode, save a total of at least three smart favorite music channels in banks A and B. In bank mode, save at least three smart favorite music channels in bank A or bank B. • Onyx Plus has not been powered on long enough to accumulate enough songs for TuneMix/Scan. Wait a few minutes and try again. Also refer to "Tips for Obtaining the Best Experience from TuneMix" on page 66 and "Tips for Obtaining the Best Experience from TuneScan" on page 69 for additional information.
Not all music channels saved as smart favorite channels are playing in TuneMix/Scan	Certain music channels are not eligible for TuneMix/Scan due to the way in which they are broadcast. While these music channels can be saved as smart favorites, they will not be included in TuneMix/Scan.

Product Specifications

System

Power Requirements:	9-16 V DC, 500 mA (max)
Operating Temperature:	-4°F to +140°F (-20°C to +60°C)
Audio Output:	1.0 V_{rms} (max)

Onyx Plus Radio

Dimensions:	4.5 in (W) x 2.4 in (H) x 0.7 in (D) 115 mm (W) x 61 mm (H) x 17 mm (D)
Weight:	3.4 oz (96 g)

***Power*Connect Vehicle Dock**

Dimensions:	4.0 in (W) x 2.4 in (H) x 1.2 in (D) 102 mm (W) x 63 mm (H) x 31 mm (D)
Weight:	1.6 oz (46 g)
Audio Connector:	1/8 in (3.5 mm) female
Antenna Connector:	SMB male

***Power*Connect Power Adapter**

Dimensions:	3.7 in (W) x 1.7 in (H) x 1.3 in (D) 94 mm (W) x 43 mm (H) x 34 mm (D)
Weight:	2.4 oz (69 g)
Input / Output:	9-16 V DC / 5 V DC, 1.5 A
Cable Length:	4 ft 7 in (1.4 m)

Vehicle Antenna

Type:	XM Magnetic Mount
Connector:	SMB female, right angle
Cable Length:	23 ft (7.0 m)

Aux In Cable

Connectors:	1/8 in (3.5 mm) stereo male to 1/8 in (3.5 mm) stereo male
Cable Length:	4 ft (1.2 m)

Patent Information

It is prohibited to, and you agree that you will not, copy, decompile, disassemble, reverse engineer, hack, manipulate, or otherwise access and/or make available any technology incorporated in this product. Furthermore, the AMBE® voice compression software included in this product is protected by intellectual property rights including patent rights, copyrights, and trade secrets of Digital Voice Systems, Inc. The software is licensed solely for use within this product. The music, talk, news, entertainment, data, and other content on the Services are protected by copyright and other intellectual property laws and all ownership rights remain with the respective content and data service providers. You are prohibited from any export of the content and/or data (or derivative thereof) except in compliance with applicable export laws, rules and regulations. The user of this or any other software contained in a Sirius XM Radio Inc is explicitly prohibited from attempting to copy, decompile, reverse engineer, hack, manipulate or disassemble the object code, or in any other way convert the object code into human-readable form.

Environmental Information

Follow local guidelines for waste disposal when discarding packaging and electronic appliances.

Perchlorate Material - special handling may apply. See www.dtsc.ca.gov/hazardouswaste/perchlorate (Applicable to California, U.S.A.)

FCC Statement

The user is cautioned that changes or modifications not expressly approved by Sirius XM Radio Inc. can void the user's authority to operate this device.

This device complies with Part 15 of the FCC Rules. Operation is subject to the following two conditions:

1. This device may not cause harmful interference.
2. This device must accept any interference received, including interference that may cause undesired operation.

This equipment has been tested and found to comply with the limits for a Class B digital device, pursuant to Part 15 of the FCC Rules. These limits are designed to provide reasonable protection against harmful interference in a residential installation.

This equipment generates, uses, and can radiate radio frequency energy and, if not installed and used in accordance with the installation instructions, may cause harmful interference to radio communications. However, there is no guarantee that interference will not occur in a particular installation. If this equipment does cause harmful interference to radio or television reception, which can be determined by turning the equipment off and on, the user is encouraged to try to correct the interference by one or more of the following measures:

- Reorient or relocate the receiving antenna of the affected receiver.
- Increase the separation between the SiriusXM equipment and the affected receiver.
- Connect the SiriusXM equipment into an outlet on a circuit different from that to which the affected receiver is connected.
- Consult the dealer or an experienced radio/TV technician for help.

WARNING! The FCC and FAA have not certified this Satellite Radio Receiver for use in any aircraft (neither portable nor permanent installation). Therefore, Sirius XM Radio Inc. cannot support this type of application or installation.

Copyrights and Trademarks

© 2015 Sirius XM Radio Inc. “Sirius”, “XM” and all related marks and logos are trademarks of Sirius XM Radio Inc. and its subsidiaries. “BBC” and “Radio One” are trademarks of the British Broadcasting Corporation and are used under license. BBC logo © BBC 1996. Radio 1 logo © BBC 2001. Cosmopolitan® is a registered trademark of Hearst Communications, Inc. Elvis Radio logo © EPE Reg. U.S. Pat & TM off. IndyCar (and Design) are registered trademarks of Brickyard Trademarks, Inc., used with permission. Major League Baseball trademarks and copyrights are used with permission of Major League Baseball Properties, Inc. Visit the official website at MLB.com. Games subject to availability and change and may not include all spring training games. All rights reserved. NASCAR® is a registered trademark of the National Association for Stock Car Auto Racing, Inc. The NBA identifications are the intellectual property of NBA Properties, Inc. and the respective NBA member teams. © 2015 NBA Properties, Inc. © 2015 NFL Properties LLC. All NFL-related trademarks are trademarks of the National Football League. NHL and the NHL Shield are registered trademarks of the National Hockey League. © NHL 2015. All NHL logos and marks and NHL team logos and marks depicted herein are the property of the NHL and the respective teams and may not be reproduced without the prior written consent of NHL Enterprises, L.P. The Home Ice© channel is a registered trademark of XM Satellite Radio Inc. The Swinger Golfer logo is a registered trademark of PGA TOUR, Inc. Visit www.siriusxm.com/channellineup for updates. All programming/channel lineup/XM service subject to change or preemption. All other marks and logos are the property of their respective owners. All rights reserved.

IMPORTANT NOTICE: REQUIRED SUBSCRIPTION

Hardware and subscription sold separately, and activation fee required. Other fees and taxes may apply. **Subscriptions governed by SiriusXM Customer Agreement; see www.siriusxm.com**. Prices and programming are subject to change. **Service automatically renews into the subscription Package you choose (which may differ from the Package which arrived with the Radio), for additional periods of the same length, and automatically bills at the then current rates, after any complimentary trial or promotional period ends, until you call us at 1-866-635-2349 to cancel**. XM U.S. Satellite service available only to those at least 18 years of age in the 48 contiguous USA and DC, while SiriusXM Internet Radio is available throughout our satellite area and also AK, HI and PR.

Owners Record

The Radio model number is located below and the XM Radio ID is located on the label on the back of Onyx Plus.

Record the XM Radio ID in the space provided below. Refer to these numbers whenever you call your dealer regarding this product.

Radio Model Number: SXPL1

XM Radio ID:_____

Sirius XM Radio Inc.
1221 Avenue of the Americas
New York, NY 10020

1.866.635.2349

siriusxm.com

© 2015 Sirius XM Radio Inc.

SXPL1V1UG 151105a